March 27, 1928. 1,663,752

C. FLEISCHER

AMUSEMENT DEVICE

Filed May 23, 1927 2 Sheets-Sheet 1

Fig. 1

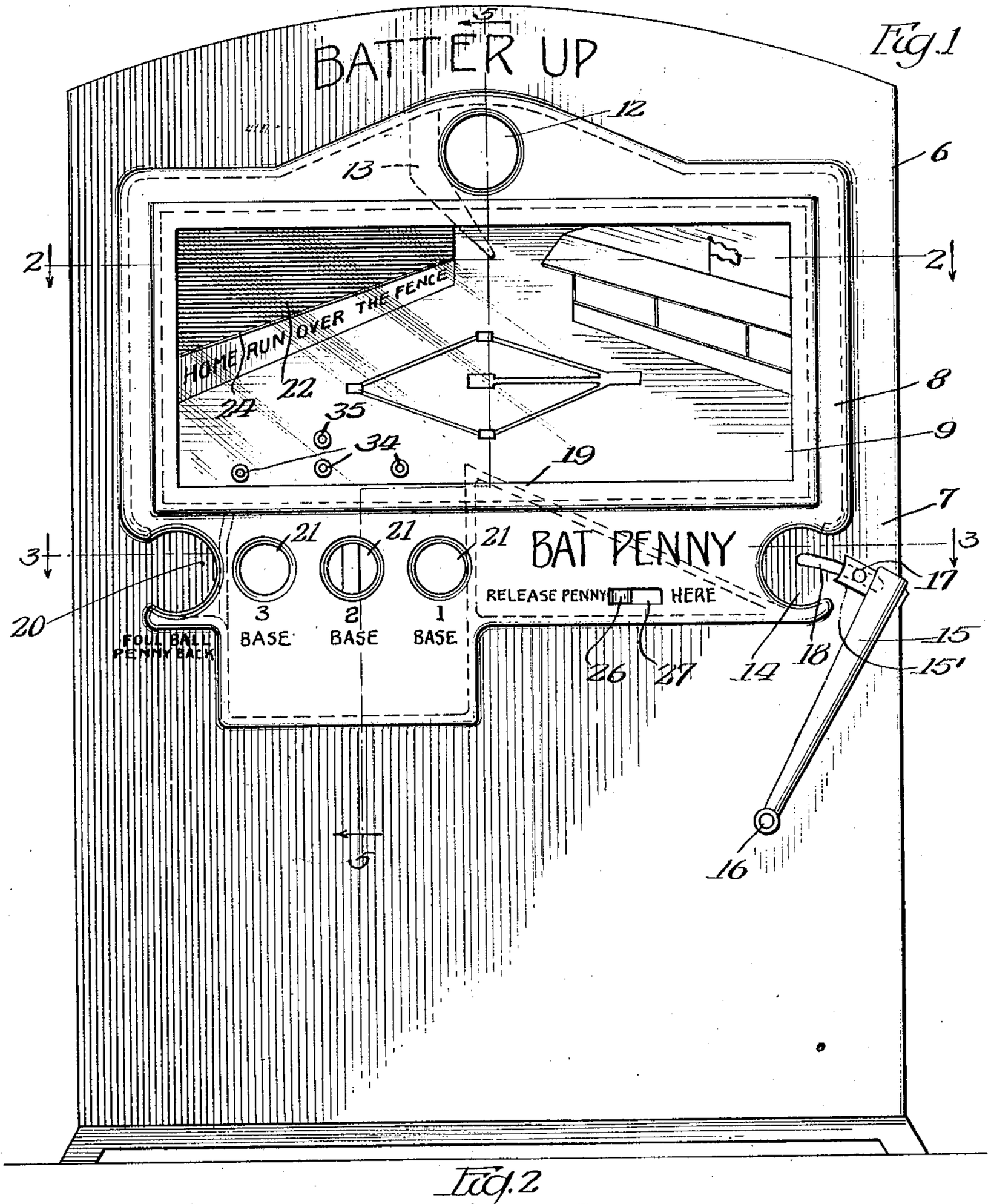

Fig. 2

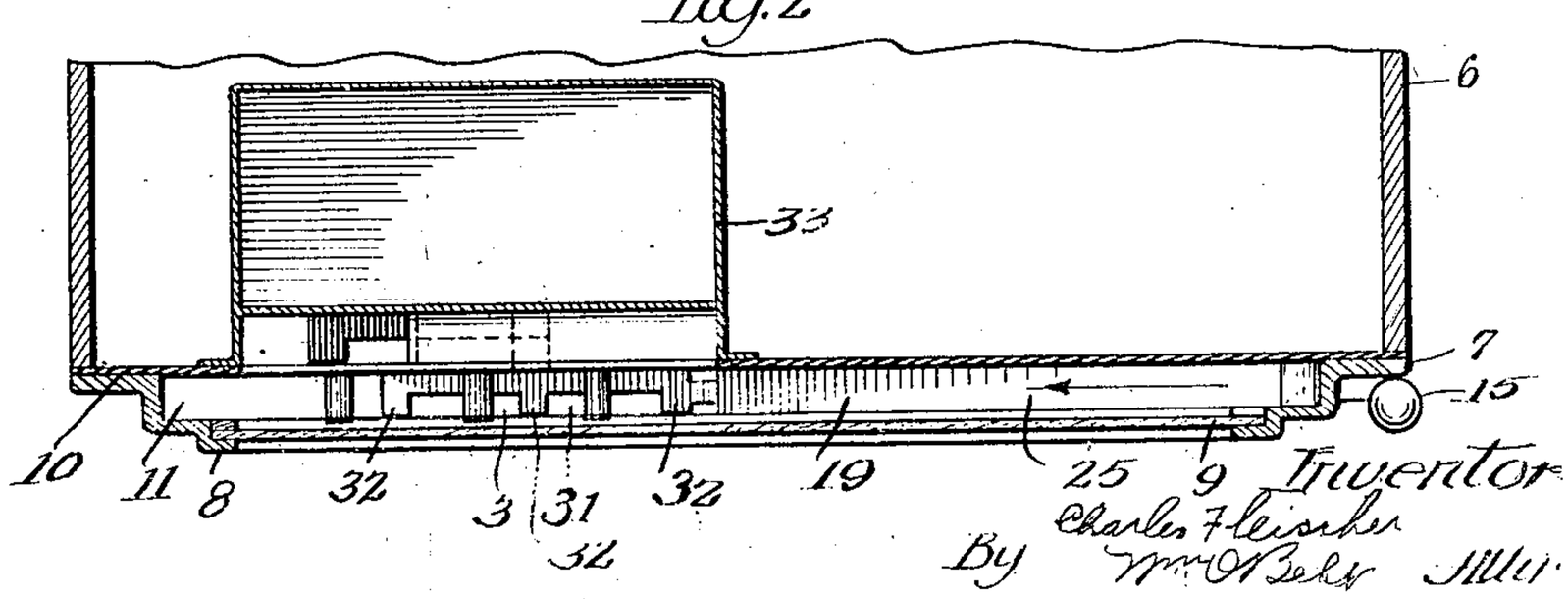

Inventor
Charles Fleischer
By Wm. O'Brien Attorney

March 27, 1928.

1,663,752

C. FLEISCHER

AMUSEMENT DEVICE

Filed May 23, 1927

2 Sheets-Sheet 2

Fig. 3

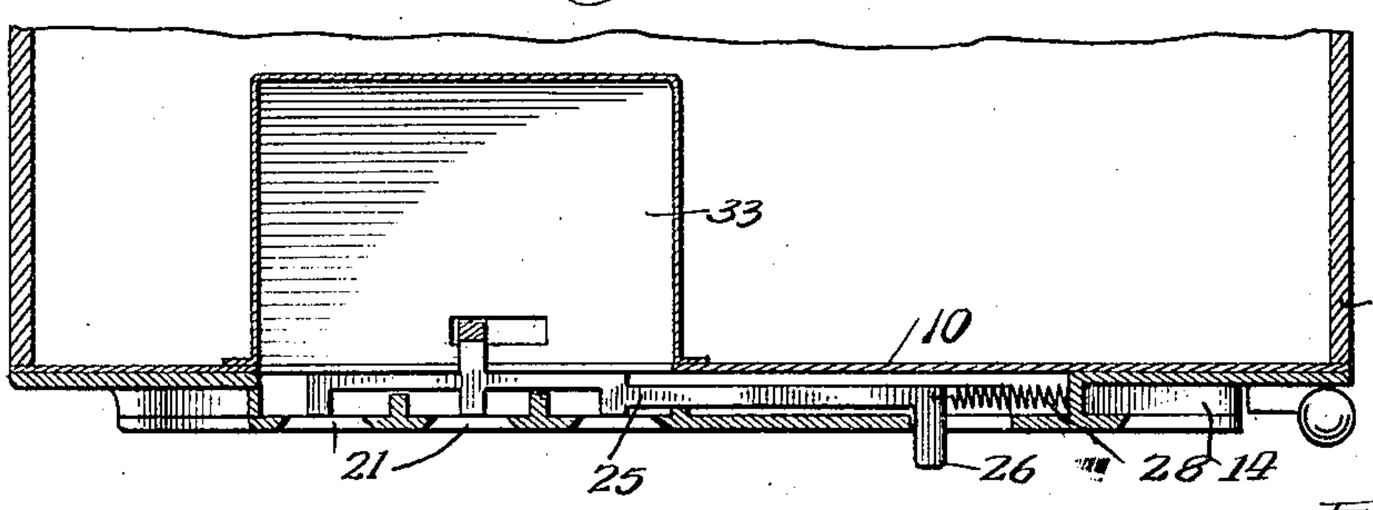

Fig. 4

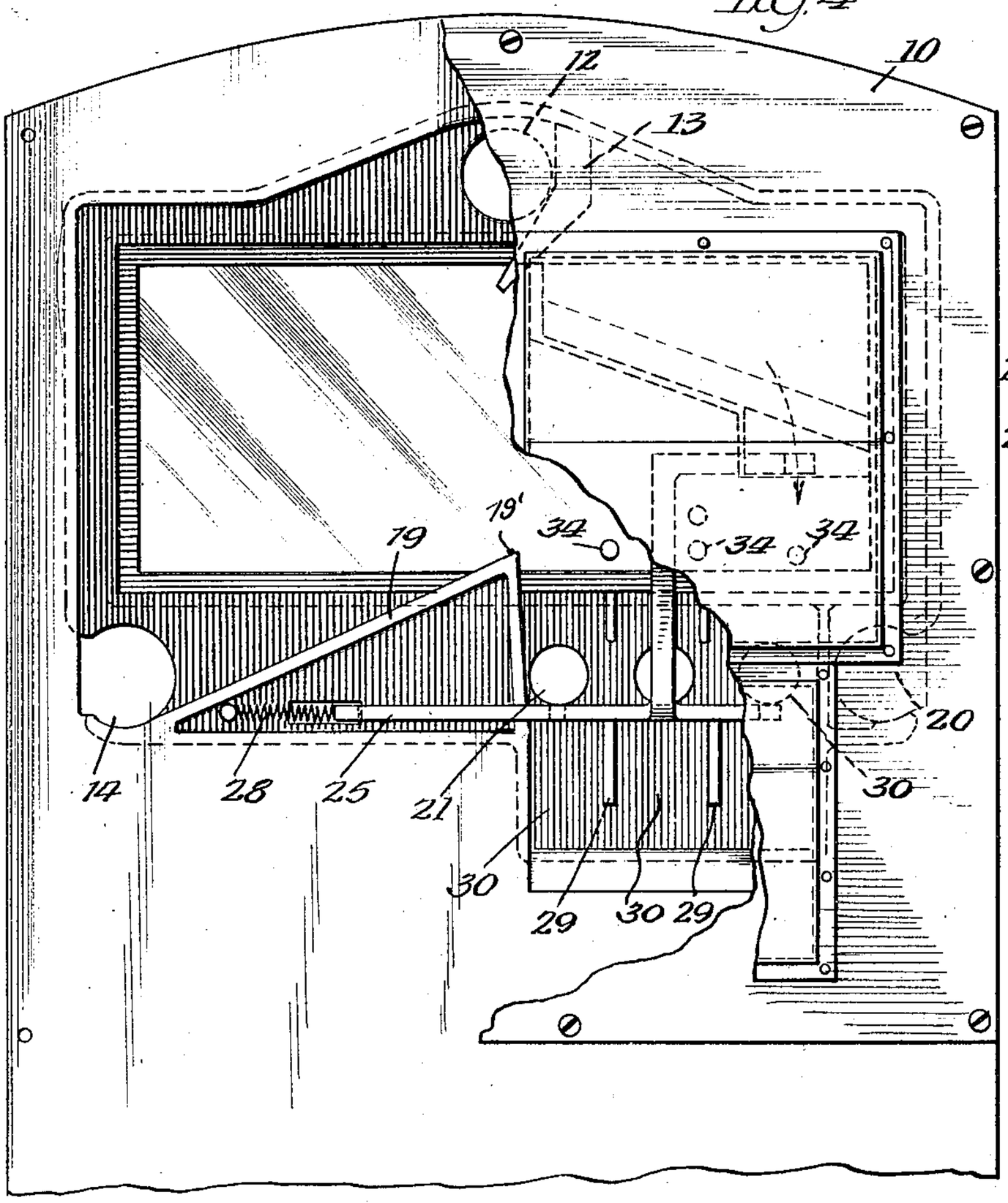

Fig. 5

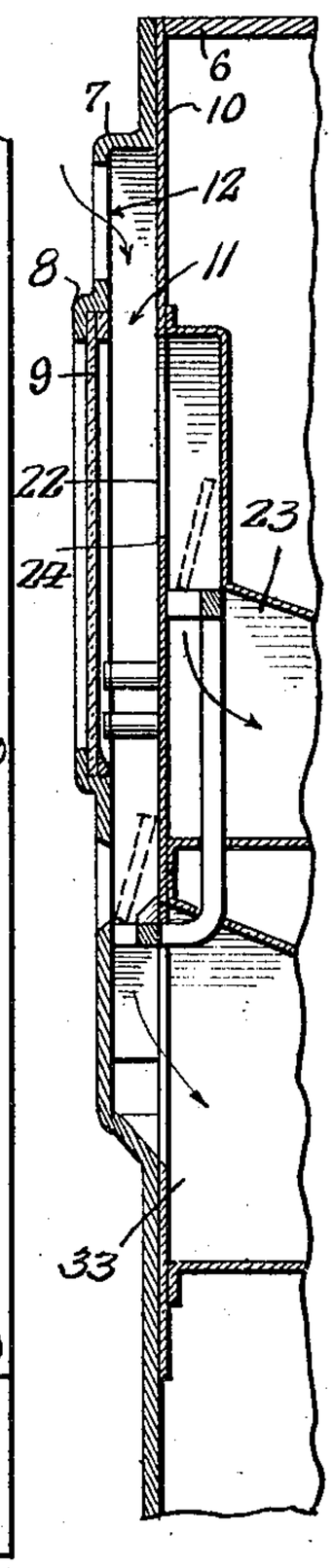

Inventor
Charles Fleischer
By Wm. O. Belt Atty.

Patented Mar. 27, 1928. 1,663,752

UNITED STATES PATENT OFFICE.

CHARLES FLEISCHER, OF BROOKLYN, NEW YORK, ASSIGNOR TO JOHN F. MEYER, OF CHICAGO, ILLINOIS.

AMUSEMENT DEVICE.

Application filed May 23, 1927. Serial No. 193,464.

This invention relates to amusement devices which are operated by coins, tokens or other disk shaped articles, and its object is to provide a device which may be played in accordance with certain rules relating to base ball for the purpose of creating interest and amusement.

A further object thereof is to provide a device of improved and simple construction which can be readily and economically manufactured and which will furnish greater pleasure and amusement to the operator and all those associated with him.

In the accompanying drawings embodying the invention

Fig. 1 is a front elevation of the device.

Fig. 2 is a detail sectional view taken on the line 2—2 of Fig. 1.

Fig. 3 is a detail sectional view taken on the line 3—3 of Fig. 1.

Fig. 4 is a rear elevation of the front plate with the back plate partly broken away.

Fig. 5 is a detail sectional view taken on the line 5—5 of Fig. 1.

Referring to the drawings 6 is a cabinet having a front plate 7 to which a face plate 8 is integrally attached. The front plate may have a design thereon to represent a base ball playing field which is covered by a glass plate 9.

The face plate 8 is spaced from the front plate 7 and a back plate 10 attached to the rear side of the front plate provides a compartment 11 in which various parts of the device are housed.

An opening 12 is provided in the face plate for the reception of coins, tokens or other disk shaped articles which are deflected by the baffle 13 and which eventually fall into a recess 14.

A lever 15 preferably in the shape of a base ball bat, is pivoted to the face plate 7 at 16, Fig. 1. This lever has a lug 15′ formed thereon which carries a pin 17 adapted to travel in a slot 18 in the face plate to limit the pivotal movement of the lever.

An inclined member 19 is arranged between the front plate 7 and the back plate and when a token is inserted in the opening 12 it will fall upon the inclined member which will deflect it into the recess 14 where it will remain until the lever or bat is operated.

The face plate also has a recess 20 similar to the recess 14 and on the opposite side of the face plate to designate a foul ball into which the token may fall for removal by the operator; and other openings 21 designating 1, 2, or 3 base hits are formed near the bottom of the face plate for a purpose later to be described. A slot opening 22 formed in the front plate communicates with a receptacle 23 which receives any tokens which may fall over the edge 24 designating a home run over the fence has been made.

A rod or bar 25, Figs. 3, 4 and 5, is slidably mounted in the compartment 11 and has a lug or handle 26 which extends through a slot 27 in the face plate 8. This rod is supported by suitable spaced flanges 29 formed on the face plate between the openings 21 and form passages 30. Slots 31 are cut at intervals in the rod to provide lugs 32, Fig. 2, which supports the coin or token which has dropped into position behind one of the openings 21. These openings are made small to prevent the coin or token from being removed from the outside. By sliding the lug or handle 26 in the slot 27 the rod 25 is operated to release the coin. During the operation of the rod 25 the token will pass through one of the slots 31 into one of the passages 30 which registers with the slots 31 and then into a receptacle 33 suitably mounted in the cabinet.

A spring 28 is connected to the rod 25 to normally hold the rod in the position shown in Fig. 1.

Suitable rubber bumpers 34, Figs. 1 and 4, are mounted on the front of the back plate 10 and extend forwardly substantially to the glass on the face plate so that the token is deflected into one of the passages 30 leading from one of the openings 21: or into the recess 20, as the case may be, to designate which one of the various plays on the base ball field has been made.

It may be desired, however, to give a special premium when the token enters certain passages, so provision has been made to make it more difficult for the token to enter the premium passages. In the present case it has been found desirable to make the 2 base, Fig. 1, one of the premium passages so an additional rubber bumper 35 is attached to the back plate to make it more difficult for the coin or token to enter that particular passage.

Also, if the token enters the slot 22, thereby registering a home run over the fence, the

coin or token will fall into the receptacle 23 and an additional premium may be given.

When however, the token enters the passage leading to the recess 20 it will fall into the recess 20 and be returned to the player to be replayed if desired.

In operating the device the token, coin or other disk shaped object is inserted in the opening 12 where it will be deflected by the baffle 13 and fall upon the inclined edge member 19 and then come to rest in the opening 14. By striking the bat a sharp blow the token will be deflected so as to cause it to fall over the edge 19′ of the inclined member 19 and into one of the various passages.

If the token enters one of the passages leading from the openings 21, designating the various base hits such as a base 1, 2, and 3 in Fig. 1 the token will rest on one of the lugs 32 behind one of the openings 21 and be in plain view to allow the player to ascertain what play has been made. Upon movement of the handle 26 to operate the rod 25 the token will fall into one of the passages 30 and then into the receptacle 33, and play may again be resumed.

Occasionally the token or other disk shaped article will enter the slot 22, over the edge 24 designating the fence, and then fall into the receptacle 23 provided for that purpose.

As the largest premium is given when the token enters the slot 22 it has been found preferable to have a separate receptacle for holding those tokens so that the operator can determine what percentage of tokens played are classed as home runs and he may increase or decrease the premium for the so called home run if desired.

The front plate has been made removable so that easy access may be had to the receptacles. This plate is provided with a suitable lock (not shown) to prevent others than the owner or the operator from having access to the mechanism or token receptacles.

Of course, changes may be made in the construction and arrangement of parts without departing from the spirit or sacrificing the advantages of the invention and the right is hereby reserved to make such changes as fairly fall within the scope of the following claims.

I claim:

1. In an amusement device of the character described, a cabinet, a front plate, a face plate integrally connected to said front plate and having openings therein, a back plate attached to said front plate and forming a compartment, a baffle for deflecting a token inserted in one of said openings in a predetermined direction, an inclined member mounted in said compartment, means for causing said token to ride over said inclined member and fall into the compartment behind one of said openings, a slotted rod for holding said tokens, flanges formed on said face plate betweeen some of said openings to form passages leading therefrom, and for supporting said rod, a receptacle cooperating with said passages, and means including said rod for causing said token to fall through said slots in the rod and into said receptacle.

2. In an amusement device of the character described, a cabinet, a removable front plate, a face plate integrally connected to said front plate, a back plate mounted on said front plate and forming a compartment, said face plate being provided with a series of openings and recesses, means for deflecting a token when inserted in one of said openings, means for causing said tokens to enter one of said recesses, means connected to the face plate and adjacent said recess for flipping said token, means for causing said token to fall behind one of said openings, a receptacle attached to said back plate and cooperating with some of said openings, and means slidably mounted on said face plate for causing said tokens to enter said receptacle.

3. In an amusement device of the character described, a cabinet, a removable front plate, a back plate spaced from said front plate and forming a compartment, a perforated face plate having recesses formed therein, one of said perforations being adapted to receive a token, a baffle for deflecting said token, an inclined member in said compartment for causing the token to enter one of said recesses, a bat shaped member is pivotally mounted on said face plate adjacent said recess for flipping said token over said inclined member and behind some of said perforations, a receptacle attached to said back plate, lugs arranged on said face plate between some of said openings and forming passages to said receptacle, and sliding means supported by said lugs for causing said tokens to fall into said receptacle.

4. In a token operated machine a cabinet, a front plate removably mounted thereon, a face plate having openings and recesses therein integrally attached to said front plate and spaced therefrom, a back plate attached to said front plate and forming a compartment, flanges formed on said front plate between some of said openings and forming passages, a receptacle mounted on said back plate and cooperating with some of said passages, another receptacle cooperating with another of said openings, means for deflecting a token into one of said recesses, means for flipping a token from said last named recess into one of said passages and means for releasing said token from said passages and enter one of said receptacles.

5. In a token operated machine, a front plate, a face plate integrally connected thereto, a back plate connected to said front plate for forming a compartment between said face plate and said back plate, said face plate provided with openings and a pair of recesses, a receptacle mounted on said back plate, lugs formed on said face plate for forming passages between some of said openings and receptacle and to one of said recesses, a second receptacle cooperating with another of said openings, means for deflecting a token into one of said opening passages or into said last named opening and means for causing said token to fall into either of said receptacles when entering the passages, said token adapted to be retrieved when entering the other of said recesses.

6. In a token operated machine, a front plate, a face plate, a back plate connected to said front plate and forming a compartment, said face plate being provided with a token opening, a slot, two recesses and sight openings, a receptacle mounted on said face plate and cooperating with said slot, another receptacle mounted on said front plate, disconnected lugs formed on said face plate for forming passages to and from the sight openings and to one of said recesses, means for deflecting a token to the other recess, pivoted means for flipping a token into either the slot, recess, or behind the sight openings, slotted means arranged in said compartment and supported by some of said lugs for holding tokens which may enter the sight passages and means for sliding the slotted means to allow the tokens thus held to enter said slots in the receptacle passages and into the receptacle.

7. In a token operated machine, a front plate, a face plate, a back plate connected to said front plate and forming a compartment, said face plate being provided with a token opening, a slot, two recesses and sight openings, a receptacle mounted on said face plate and cooperating with said slot, another receptacle mounted on said front plate, disconnected lugs formed on said face plate for forming passages to and from the sight openings and to one of said recesses, a baffle for deflecting a token to the other recess, a pivoted lever for flipping a token into either the slot, recess, or behind the sight openings, a slotted rod arranged in said compartment and supported by some of said lugs for holding tokens which may enter the sight passages and means for sliding said rod to allow the tokens thus held to enter said slots in the receptacle passages and into the receptacle.

8. In a token operated machine, a front plate, a face plate, a back plate connected to said front plate and forming a compartment, said face plate being provided with a token opening, a slot, two recesses and sight openings, a receptacle mounted on said face plate and cooperating with said slot, another receptacle mounted on said front plate, disconnected lugs formed on said face plate for forming passages to and from the sight openings and to one of said recesses, a baffle for deflecting a token to the other recess, an inclined member arranged in said compartment, a pivoted lever for flipping a token over said inclined member and into either the slot, recess, or behind the sight openings, a slotted rod arranged in said compartment and supported by some of said lugs for holding tokens which may enter the sight passages and means for sliding said rod to allow the tokens thus held to enter said slots in the receptacle passages and into the receptacle, tokens entering one of said recesses being adapted to be returned to the operator.

CHARLES FLEISCHER.