March 27, 1928. 1,663,644

L. C. WEAVER ET AL

AIR CIRCULATING DEVICE FOR WARM AIR FURNACES

Filed Jan. 9, 1928 2 Sheets-Sheet 1

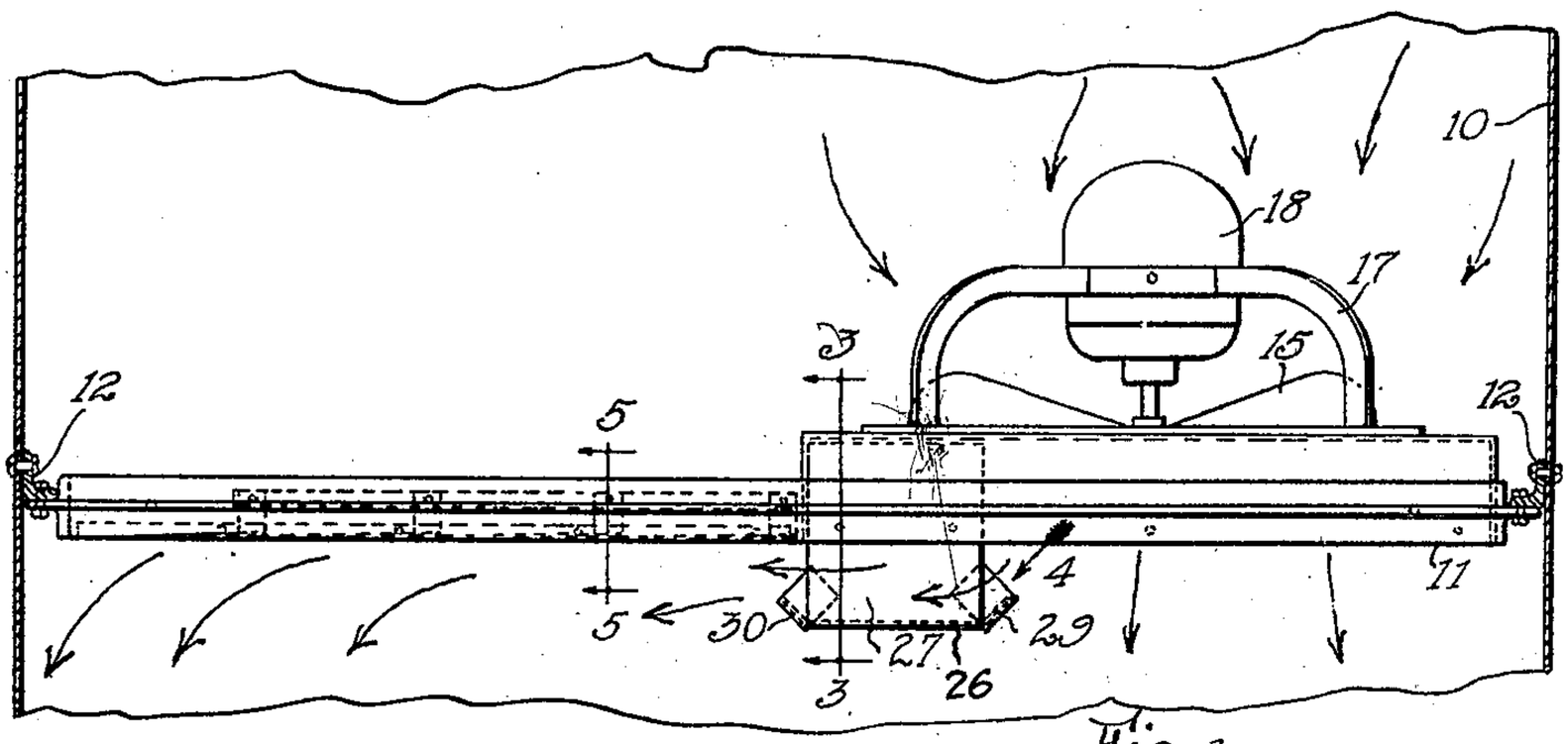

Fig. 1.

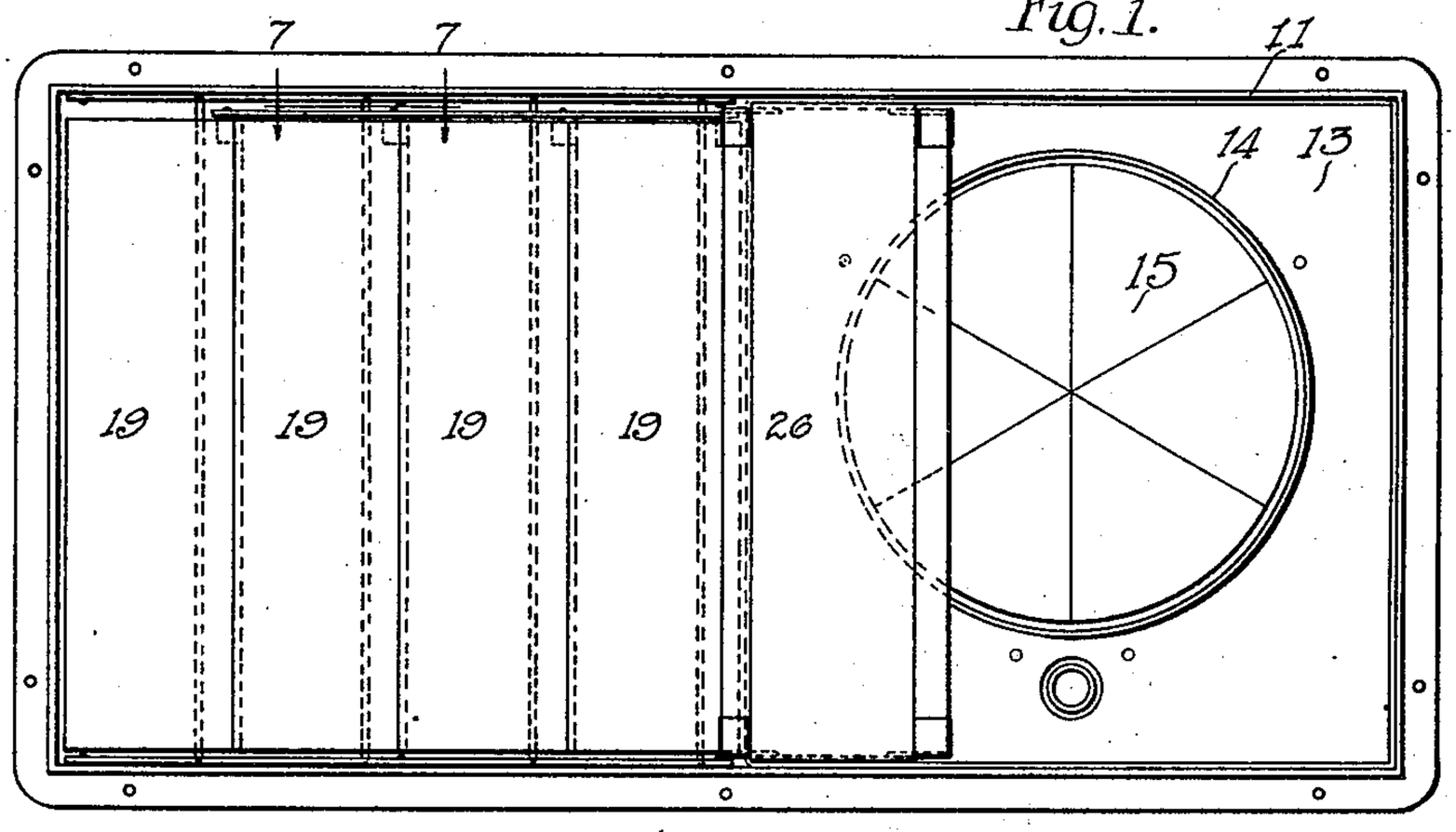

Fig. 2

INVENTORS,
Lewis C. Weaver.
Walter H. Rietz
BY
Fisher, Towle, Clapp & Soans,
ATTORNEYS.

March 27, 1928. 1,663,644

L. C. WEAVER ET AL

AIR CIRCULATING DEVICE FOR WARM AIR FURNACES

Filed Jan. 9, 1928 2 Sheets-Sheet 2

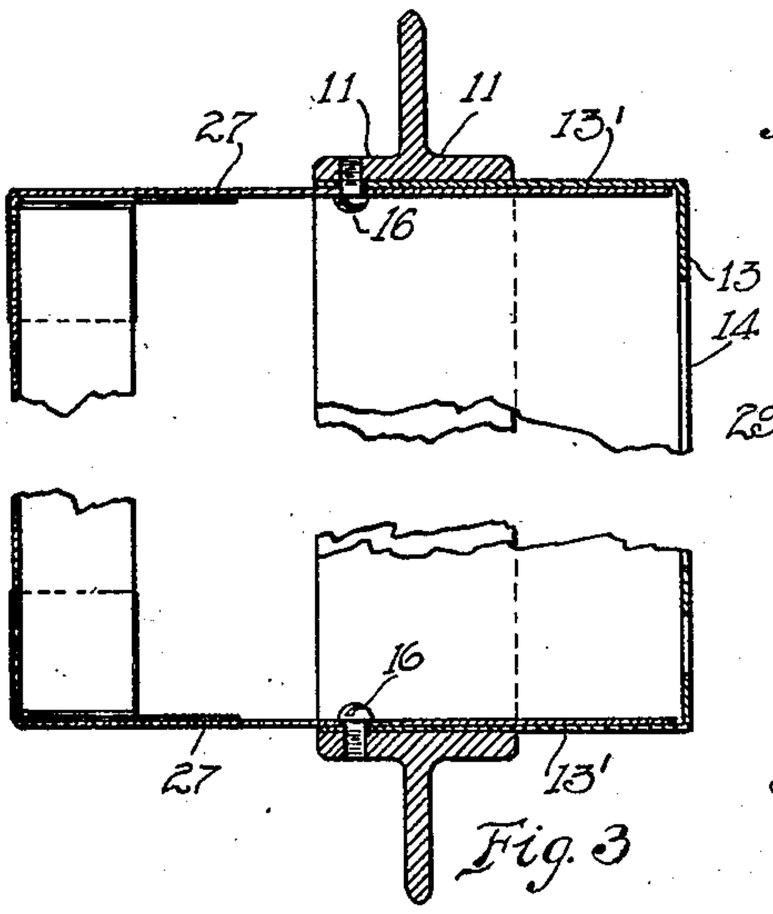

Fig. 3

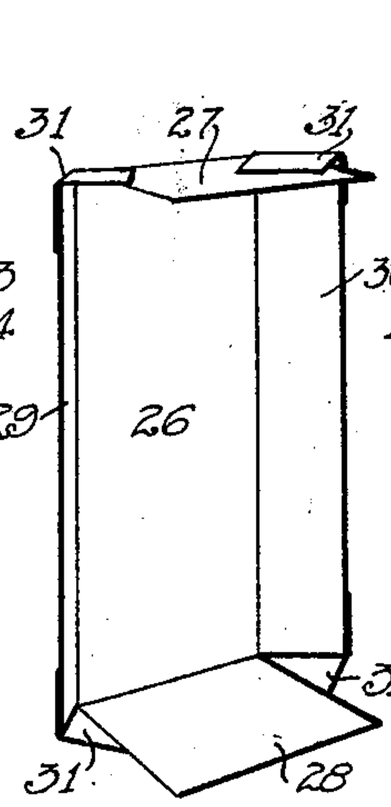

Fig. 4

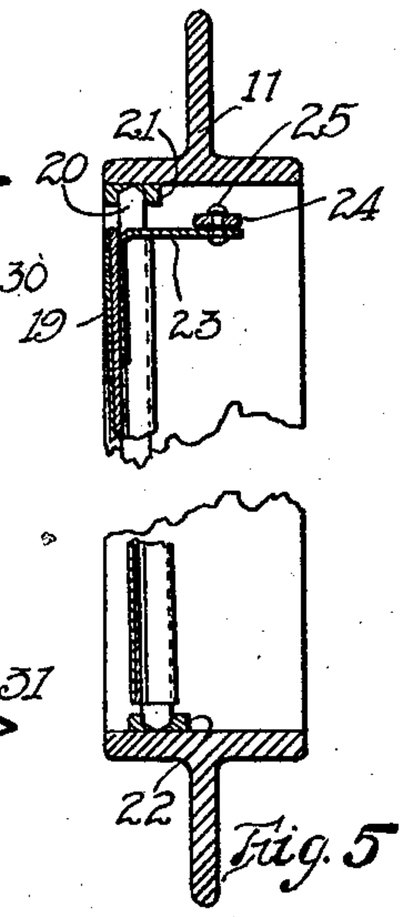

Fig. 5

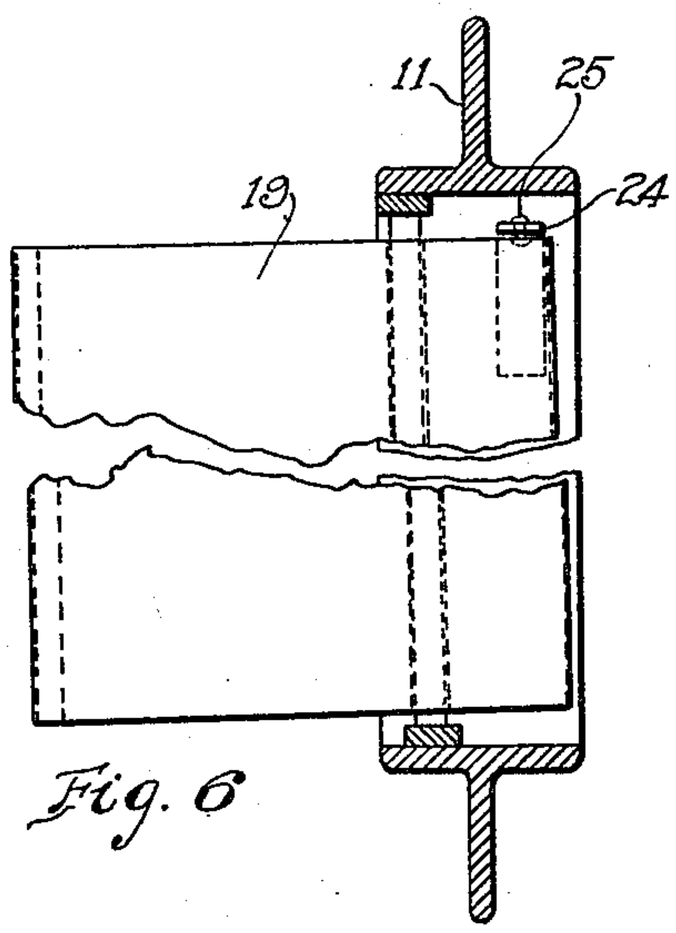

Fig. 6

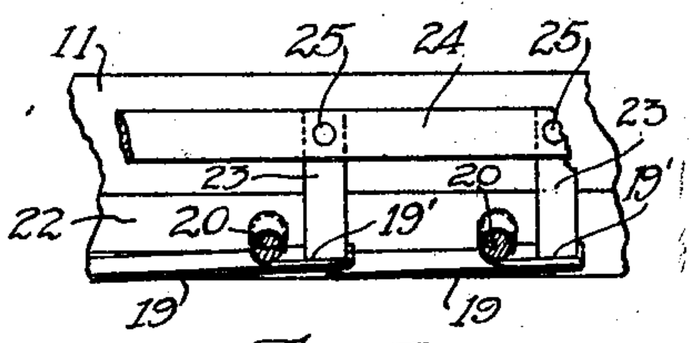

Fig. 7

INVENTORS,
Lewis C. Weaver.
Walter H. Rietz
BY
Fisher, Towle, Clapp & Soans,
ATTORNEYS.

Patented Mar. 27, 1928. 1,663,644

UNITED STATES PATENT OFFICE.

LEWIS C. WEAVER, OF CHICAGO, AND WALTER H. RIETZ, OF RAVINIA, ILLINOIS, ASSIGNORS TO ILG ELECTRIC VENTILATING COMPANY, OF CHICAGO, ILLINOIS, A CORPORATION OF LOUISIANA.

AIR-CIRCULATING DEVICE FOR WARM-AIR FURNACES.

Application filed January 9, 1928. Serial No. 245,391.

This invention relates to devices for artificially stimulating the circulation of air through the air jackets of warm air furnaces and the intake and discharge ducts thereof. Various devices of this character have heretofore been proposed which include an electrically operated fan located in the return air intake duct or passageway leading into the furnace jacket and a shutter or shutters located at one or both sides of the fan, with various automatic means for closing the shutter or shutters when the fan is operating and opening the shutter or shutters when the fan is idle so as to permit, in the latter case, a free and unobstructed natural circulation of the air. In some of these devices the shutter is mounted eccentrically on a pivot slightly inclined from the vertical, so that the shutter tends by gravity to swing to open position, and the increased air pressure in the furnace jacket created by the fan is relied on to close the shutter by back pressure thereagainst. It has been found in practice, however, that where such units are installed, after the fan is started, it creates a partial vacuum, due to siphonic action, on the sides of the air blast which, so far from closing the shutter, actually tends to keep it open, and the resistance to the free circulation beyond the fan sets up a local circulation between the front and the back of the fan through the shutter opening, the back flow of air through the shutter opening impinging only on the edge of the open shutter blade and thus have no closing effect on the latter.

The principal object of our present invention is to provide a fan and shutter construction operating on a different principle and wherein back pressure of air is not relied on to close the shutter and hold it closed while the fan is operating, but the shutter is closed and held closed by a portion of the fan blast directed thereagainst by means of a suitable stationary device in the nature of a deflector which is so shaped and located relatively to the fan and shutter as to continuously deflect a portion of the fan blast directly against the shutter.

Our invention, its mode and principle of operation, and the advantages inhering therein will be readily understood by persons skilled in the art from the following detailed description, taken in connection with the accompanying drawings, in which we have illustrated one practical and approved mechanical embodiment of the invention, and wherein—

Fig. 1 is a top plan view of the device, shown as located in and crosswise of the usual air inflow or return conduit to the furnace jacket, with the shutter vanes closed;

Fig. 2 is a front elevation of the device, also showing the shutter vanes closed;

Fig. 3 is an enlarged vertical section broken out through the frame and the deflector, taken on the line 3—3 of Fig. 1;

Fig. 4 is a perspective elevation of the deflector, viewed in the direction of the arrow 4 of Fig. 1;

Fig. 5 is an enlarged vertical section broken out taken on the line 5—5 of Fig. 1;

Fig. 6 is a view similar to Fig. 5 but showing the shutter vane in open position;

Fig. 7 is a fragmentary top plan view of a pair of shutter vanes and their connecting link, in section through the vane spindles on the line 7—7 of Fig. 2.

Referring to the drawings, at 10 we have indicated in Fig. 1 a fragment of the usual rectangular cold air intake conduit which in practice leads into the bottom of the warm air jacket of the furnace. Disposed within and crosswise of this conduit is our improved air circulating unit which, in the preferred form herein illustrated, is constructed as follows.

11 designates a rectangular frame structure which may be secured to the internal walls of the conduit 10 as by angle brackets 12. 13 designates a fan supporting panel formed with a central opening 14 to accommodate the fan 15 and with forwardly directed flanges 13′ (Fig. 3) fitting within the frame 11 and attached thereto as by screws 16. On the panel 13 is mounted the fan frame 17 carrying the electric motor 18 on the armature of which the fan 15 is mounted. In the form of the device herein illustrated, the fan supporting panel occupies approximately one longitudinal half of the frame 11.

Pivotally mounted in the other half of the frame 11 is a group of shutter vanes 19 conveniently made of sheet-metal. In the vane structure herein illustrated one end portion of the metal forming the vane is folded rearwardly on the body portion of the vane, as shown at 19′ in Fig. 7, and the free end

of the folded portion is curled around and secured to a pivot spindle 20 which latter, as best shown in Fig. 5, has upper and lower conical bearings in strips 21 and 22 secured to the upper and lower limbs of the frame 11. It will be observed by reference to Figs. 5 and 6 that the spindle 20 is not vertical, but its upper end is pitched slightly forward from the vertical, and this, together with the fact that the spindle is mounted on the vane eccentrically widthwise of the latter, causes the vane to tend to swing to the open position shown in Fig. 6 by gravity, when permitted to do so. Attached to the rearwardly folded portion 19′ of each shutter vane is a rearwardly extending arm 23 (Figs. 5 and 7), and the arms 23 of the several shutter vanes are flexibly connected by a link 24 that is pivoted to each arm at 25, whereby the several shutter vanes are caused to open simultaneously and close simultaneously.

Located a slight distance forwardly of the panel 13 is a fixed deflector element, by which a portion of the fan blast is intercepted and directed against the adjacent open shutter vane. This deflector, in a simple and practical form capable of being made from a sheet-metal blank, is shown in perspective detail in Fig. 4 and comprises a flat plate 26 disposed substantially parallel with the panel 13, upper and lower rearward extensions 27 and 28 continuous with the upper and lower edges of the plate 26, which extensions may be attached to the frame 11 by the screws 16, and inclined wings 29 and 30 continuous with the vertical margins of the plate 26, the wing 29 being inclined toward the fan 15 to catch a portion of the fan blast, and the wing 30 being inclined toward the shutter vane 19 that lies nearest the fan to direct the intercepted portion of the blast against said shutter vane. Preferably the gaps between the extensions 27, 28 and the side wings 29 and 30 are closed by angle strips 31 spot-welded, soldered or otherwise secured thereto, this construction also stiffening said extensions and wings.

In the operation of the device, when the fan is idle the shutter vanes automatically swing to the open position illustrated in Fig. 6, and natural circulation of air between the shutter vanes is thus permitted. When a forced circulation is desired, the fan motor is energized and the fan is started in operation. A portion of the fan blast is at once intercepted by the stationary deflector, and is directed against the open shutter vane 19 lying nearest the fan, which causes said shutter vane to swing to closed position, the other vanes of the group being simultaneously moved to closed position through the link 24 and arms 23. As will readily be seen from Fig. 1, when the shutter vanes have been closed, the intercepted portion of the fan blast continues to impinge upon the closed vanes in such a way as to hold them in closed position so long as the fan is operating. When the fan ceases to operate, the thrust of the intercepted portion of the blast is, of course, intermitted, and natural circulation of air is re-established by reason of the shutter vanes swinging to open position.

From the foregoing it will be seen that the closing of the shutter vanes, and the maintaining of said vanes in closed position, are in no wise dependent upon any back pressure of the warm air in the furnace jacket, but are effected by a portion of the fan blast directed thereagainst through the agency of a stationary deflector.

We are aware that it has heretofore been proposed to effect the closing of a pivoted shutter through the agency of a wing on the shutter disposed at an angle to the latter so as to lie across the path of the fan blast when the shutter is open. Our present invention obviates the necessity of such an auxiliary device on the shutter itself, which interferes with the delicate balancing of the shutter, and provides for the impinging of a portion of the fan blast directly on the shutter vane itself to close and hold closed the latter. Where the shutter comprises a group of vanes connected for simultaneous operation, as herein shown, a single deflector device manifestly suffices to effect the closing of the entire group.

While we have herein shown and described one practical and operative embodiment of the invention, we do not limit the latter to the specific details of construction and arrangement herein disclosed, but reserve all such variations, modifications and mechanical equivalents as fall within the spirit and purview of the appended claims.

We claim—

1. In an air circulating device for furnaces, the combination of a panel mounted in the air intake conduit of a furnace, said panel having a fan opening, a fan mounted on said panel, a shutter so mounted in said conduit as to swing to open position when the fan is idle, and means for deflecting a portion of the fan blast against said shutter to close the latter when the fan is operating.

2. In an air circulating device for furnaces, the combination of a panel mounted in the air intake conduit of a furnace, said panel having a fan opening, a fan mounted on said panel, a shutter mounted in said conduit at one side of said fan, said shutter being so mounted as to swing to open position when the fan is idle, and means for deflecting a portion of the fan blast laterally against said shutter to close the latter when the fan is operating.

3. In an air circulating device for furnaces, the combination of a panel mounted in

the air intake conduit of a furnace, said panel having a fan opening, a fan mounted on said panel, a shutter mounted in said conduit at one side of said fan, said shutter being so mounted as to swing to open position when the fan is idle, and a fixed deflector plate in said conduit in front of said panel adapted to intercept a portion of the fan blast and direct it against said shutter to close the latter and hold it closed.

4. In an air circulating device for furnaces, the combination of a panel mounted in the air intake conduit of a furnace, said panel having a fan opening, a fan mounted on said panel, a shutter mounted in said conduit at one side of said fan, said shutter being so mounted as to swing to open position when the fan is idle, and a fixed vertical deflector plate in said conduit in front of said panel, said plate having on one vertical edge thereof a wing inclined toward said fan and on the other vertical edge thereof a wing inclined toward said shutter.

5. An air circulating unit adapted to be mounted in and crosswise of the air intake conduit of a furnace, comprising, in combination, a frame of the internal width and height of said conduit, a fan-supporting panel mounted in said frame, said panel having a fan opening, a fan and fan motor mounted on said panel, a gravity-opening shutter pivotally mounted in said frame at one side of said panel, and a fixed deflector plate mounted on said frame in front of said panel adapted to intercept a portion of the fan blast and direct it against said shutter to close the latter and hold it closed.

6. An air circulating unit adapted to be mounted in and crosswise of the air intake conduit of a furnace, comprising, in combination, a frame of the internal width and height of said conduit, a fan-supporting panel mounted in said frame, said panel having a fan opening, a fan and fan motor mounted on said panel, a gravity-opening shutter pivotally mounted in said frame at one side of said panel, and a device operative to deflect a portion of the fan blast against said shutter comprising a vertical plate in front of and substantially parallel with said panel, rearward extensions on the top and bottom edges of said plate attached to said frame, a wing on one vertical edge of said plate inclined toward said fan, and a wing on the other vertical edge of said plate inclined toward said shutter.

7. In an air circulating device for furnaces, the combination of a panel mounted in and crosswise of the air intake conduit of a furnace, said panel having a fan opening, a group of shutter vanes mounted in said conduit at one side of said panel, said vanes being mounted on inclined pivots located eccentrically widthwise of the blades whereby the latter swing by gravity to open position, and means for deflecting a portion of the fan blast against the vane nearest the fan when the latter is in operation.

8. In an air circulating device for furnaces, the combination of a panel mounted in and crosswise of the air intake conduit of a furnace, said panel having a fan opening, a group of shutter vanes mounted in said conduit at one side of said panel, said vanes being mounted on inclined pivots located eccentrically widthwise of the blades whereby the latter swing by gravity to open position, means for deflecting a portion of the fan blast against the vane nearest the fan when the latter is in operation, and means connecting said vanes for simultaneous operation.

9. An air circulating unit adapted to be mounted in and crosswise of the air intake conduit of a furnace, comprising, in combination, a frame adapted to be attached to the walls of said conduit, a fan supporting panel mounted in said frame, said panel having a fan opening, a fan and fan motor mounted on said panel, a group of shutter vanes mounted in said frame at one side of said panel, said vanes being mounted on inclined pivots located eccentrically widthwise of the blades whereby the latter swing by gravity to open position, a fixed deflector mounted on said frame in front of said panel serving to intercept and direct a portion of the fan blast against the vane nearest the fan when the latter is in operation, arms on said vanes, and a link pivoted to said arms, whereby to effect simultaneous opening movements and simultaneous closing movements of said vanes.

LEWIS C. WEAVER.
WALTER H. RIETZ.