March 27, 1928. 1,663,641

G. S. SMALLWOOD

EXERCISER AND BLOOD CIRCULATOR

Filed Jan. 27, 1927

Fig. 1.

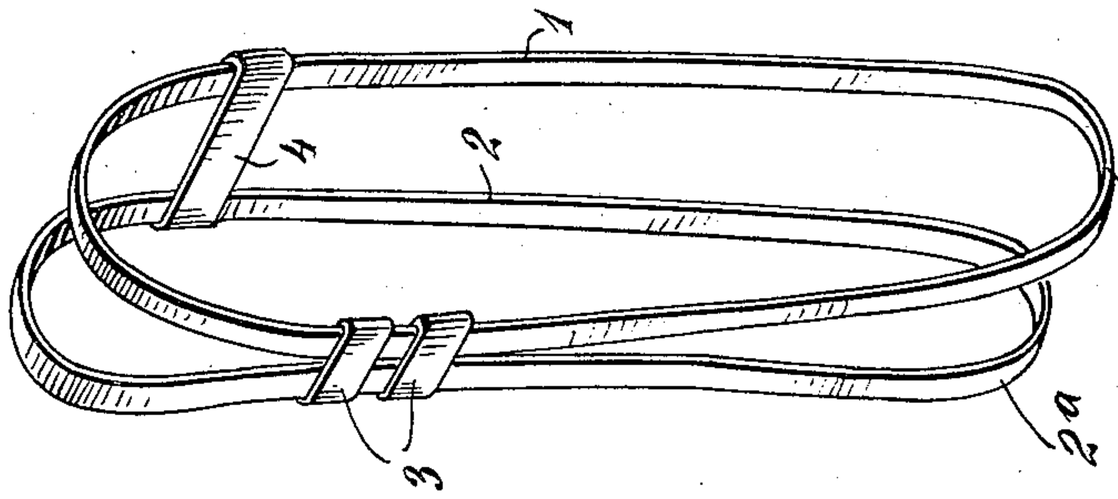

Fig. 4.

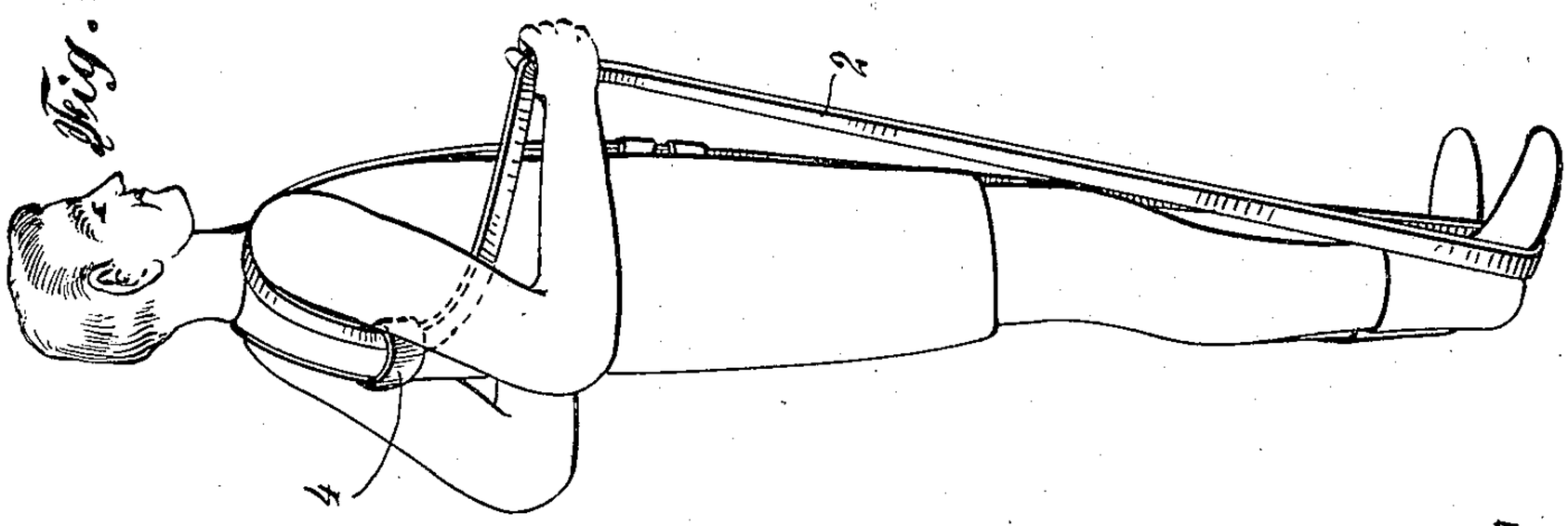

Fig. 2.

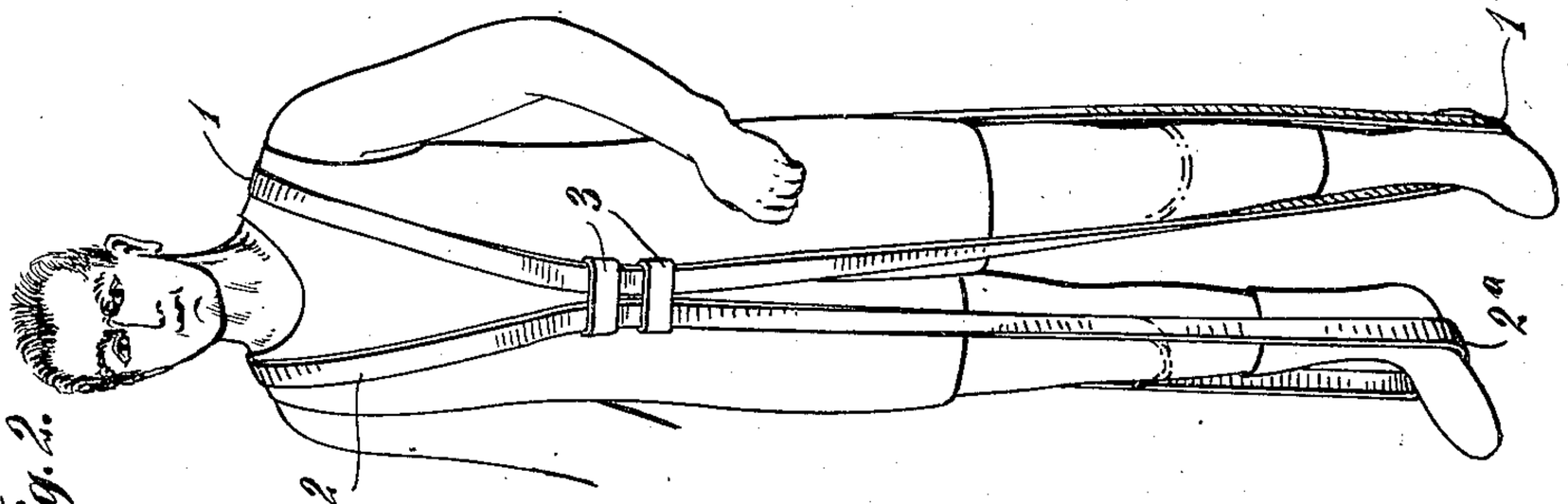

Fig. 3.

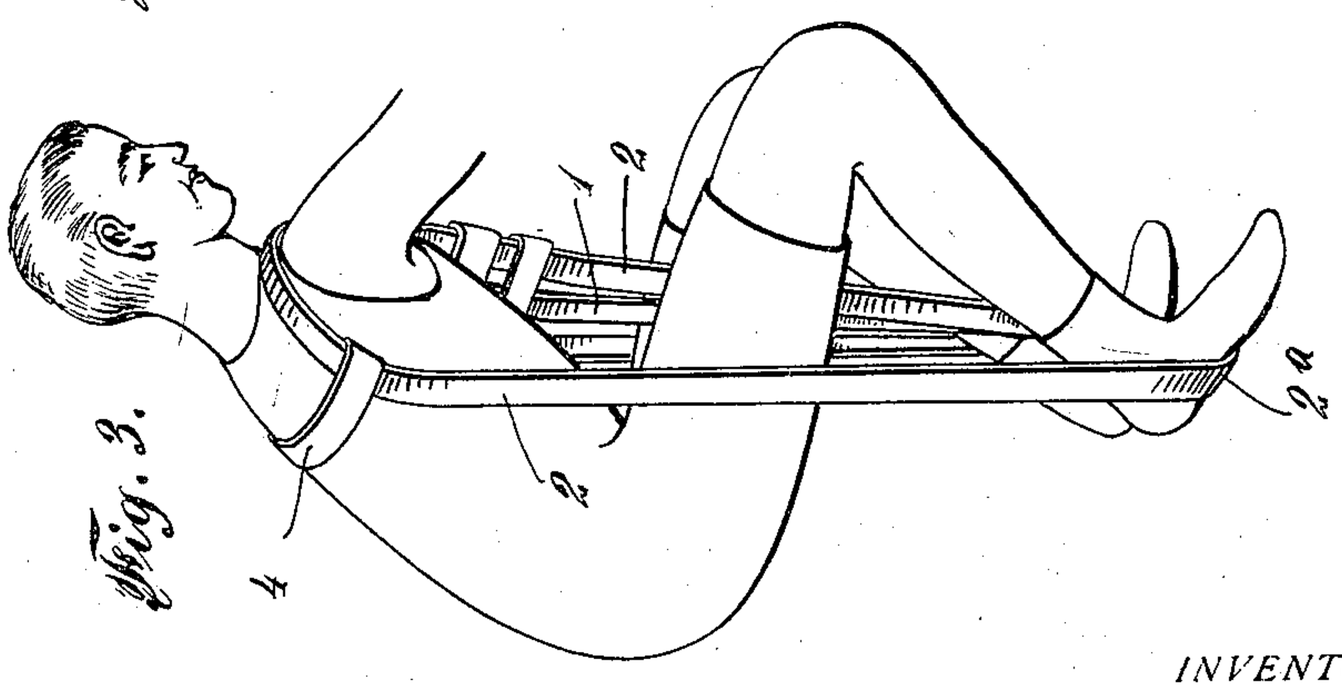

INVENTOR
G. S. Smallwood
BY T. F. Bourne
ATTORNEY

Patented Mar. 27, 1928. 1,663,641

UNITED STATES PATENT OFFICE.

GEORGE S. SMALLWOOD, OF FREEPORT, NEW YORK.

EXERCISER AND BLOOD CIRCULATOR.

Application filed January 27, 1927. Serial No. 163,878.

The object of my invention is to provide a simple and efficient exercising device adapted to be applied to the human body to extend from the shoulders to the feet, designed to exercise the muscles, keep the ligaments supple and promote a good blood supply to all parts of the body.

My invention comprises two endless elastic bands, preferably connected together at front and back portions respecting the body of the user, said bands being of such length in normal condition as to extend from the shoulders of the user to a suitable distance above the floor, whereby when the feet are fitted within the lower loops of the bands the latter will be stretched under considerable tension from shoulders to feet, and while under such tension the user may assume various positions of exercise.

My invention comprises novel details of improvement that will be more fully hereinafter set forth and then pointed out in the claims.

Reference is to be had to the accompanying drawings forming a part hereof, wherein

Fig. 1 is a perspective view illustrating my improved exerciser;

Fig. 2 is a front view illustrating my exerciser in use;

Fig. 3 is a side view illustrating a different position of use, and

Fig. 4 is a side view showing another position of use of the exerciser.

Similar numerals of reference indicate corresponding parts in the several views.

My improved exerciser comprises two endless elastic bands 1 and 2 of such dimensions as to fit upon and hang from the shoulders of a user, the length of the bands being such with respect to the height of the user that with the bands hanging from the user's shoulders the lower loop-like portions 1^a, 2^a of the bands will not reach to the feet of the user when standing erect, a suitable length being at a point below but adjacent to the knees, as illustrated in dotted lines in Fig. 2, so that when the feet are placed within the loop-like portions of the bands the latter will be stretched and create a strain on the user from the shoulders to the feet when in an erect position. The bands may be wholly or partly of rubber or elastic webbing. The bands are connected together at the forward portions by one or more transverse connectors 3 so that the inner edges of the bands are relatively close together, and the rear portions of the bands are connected by a transverse connector 4 in a position to extend approximately across the shoulders of the user. The connector 4 is of suitable length to retain the bands at about over the shoulder blades of the user. The connectors may be of rubber or fabric.

With the exerciser placed upon the body, such as illustrated in Fig. 2, the elastic bands will extend over the shoulders and over the top of the lungs, creating a strain upon the body from the shoulders to the feet, and the user may move his body in various positions while under strain. During relaxation and extension of the body the strain of the bands will force the blood to all parts of the body, internal as well as external. By assuming a squatting posture, such as in Fig. 3, tension of the bands from the shoulders to the feet will be relaxed, and upon rising to a standing position the bands will be stretched, thereby exerting pressure in the abdominal and gastro-intestinal portion of the body, the bands being retained at the front portion by the connectors 3 so as to press against the said regions and cause blood circulation. The device is also useful in many positions of the body. By having the bands extend under the plantar surfaces of the feet, (between the ends of the toes and the heel), one may assume the squatting posture, take a deep breath, hold the same a few seconds and stretch upwardly, and so on repeating these exercises, which will force the arterial circulation to all parts of the body. When stooping to relax the tension of the bands and exhaling, the venous blood is allowed to return to the lungs to purify. The strain at the plantar surfaces of the feet also has an advantageous effect to aid in restoring fallen arches. One may walk while under strain of the bands from shoulders to feet, and may raise and lower the legs, thereby exercising the leg muscles and causing circulation of the blood through the legs to great advantage. The arms may be exercised by grasping the bands and swinging the arms in various positions. By grasping the rearward bands, as in Fig. 4, the arms may be swung forwardly and backwardly, under considerable strain from the tension of the bands, thereby exercising the arm muscles, creating strain across the back, over the lungs and across the chest, causing increased blood circulation. Any other attitudes and postures may be assumed. One of

the bands may be placed upon the front, back or side of the head while the other end of the band is held firmly on the floor under the foot, creating a tension from head to foot, and by pushing the head against the band in various directions the neck may be exercised.

Having now described my invention what I claim is:

1. An exerciser comprising a pair of endless elastic bands of substantially equal length adapted to extend from the shoulders to the feet of the user uninterruptedly and loosely, the bands being shorter between the shoulder and foot-receiving portions than the length of the user from shoulders to feet when standing erect for stretching the bands and creating strain upon the body when the user stands erect, and means to retain the bands in position upon the body.

2. An exerciser as set forth in claim 1, in which the means to retain the bands upon the body include connectors at the front portion and at the shoulder portion of the user.

3. An exerciser as set forth in claim 1, in which the means to retain the bands upon the body include connectors at the front portion and at the shoulder portion of the user, the connector at the front portion of the bands retaining them in proximity to bear upon the abdominal and gastro-intestinal regions of the body in use, and the connector at the shoulder portions being of sufficient length to retain the bands over the shoulder blades of the user in use.

4. An exerciser comprising a pair of endless one-piece elastic bands of substantially equal length and cross connections of elastic material attached to the bands, one of which connections is of greater length than the other.

GEORGE S. SMALLWOOD.