March 20, 1928.

1,663,447

E. E. EICKMEYER

DEVICE FOR LAPPING IN VALVES

Filed March 31, 1924

2 Sheets-Sheet 1

Fig. 1.

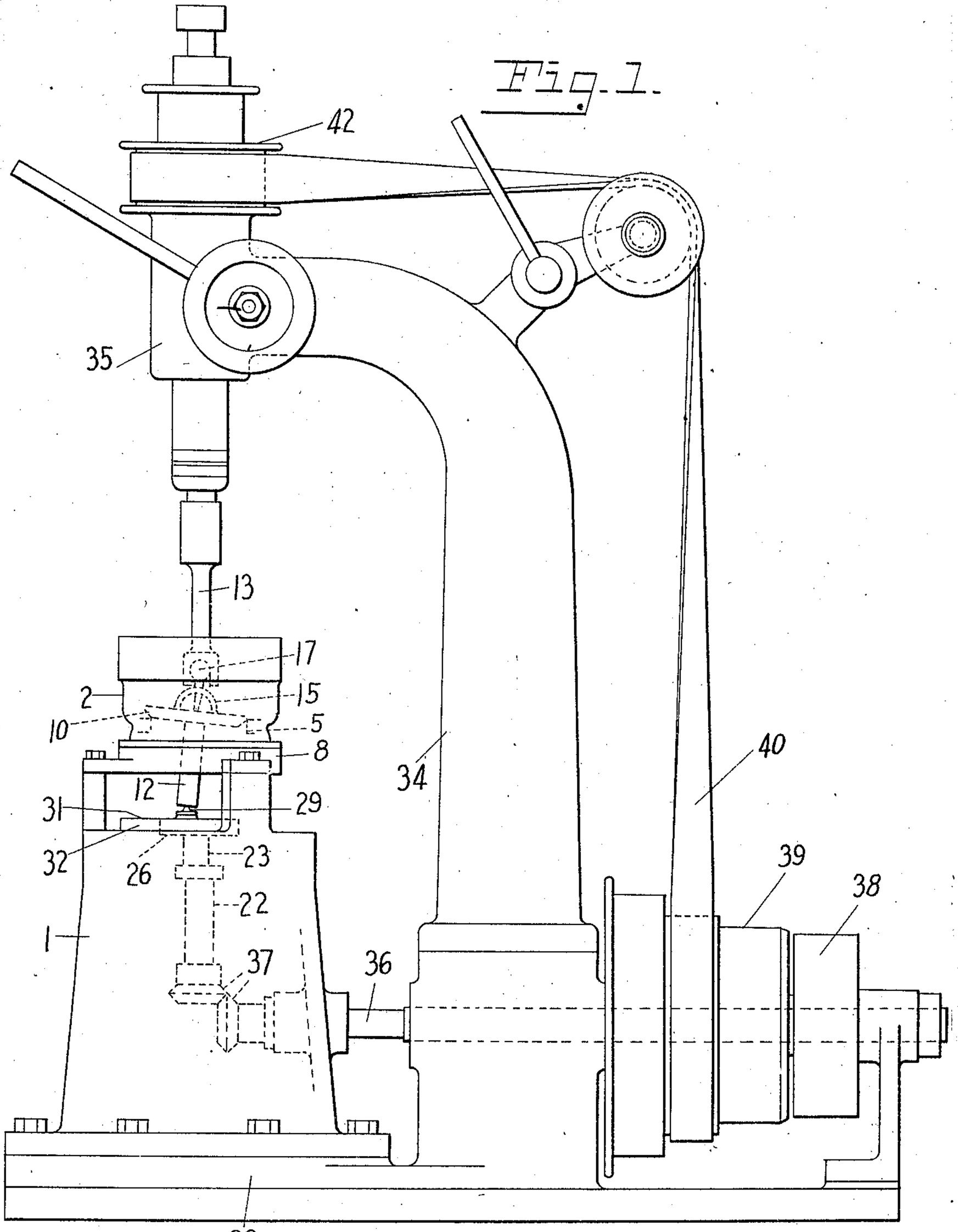

INVENTOR.
EARL E. EICKMEYER.
By Edward A. Reed.
ATTORNEY.

March 20, 1928.

1,663,447

E. E. EICKMEYER

DEVICE FOR LAPPING IN VALVES

Filed March 31, 1924

2 Sheets-Sheet 2

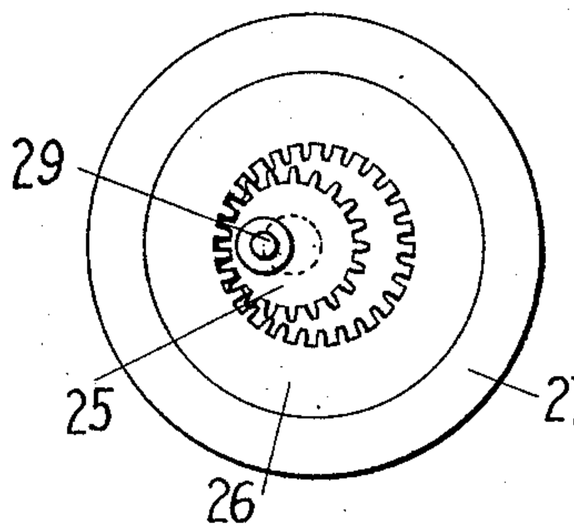

Fig. 3.

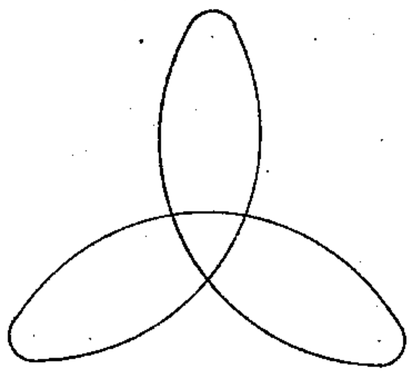

Fig. 4.

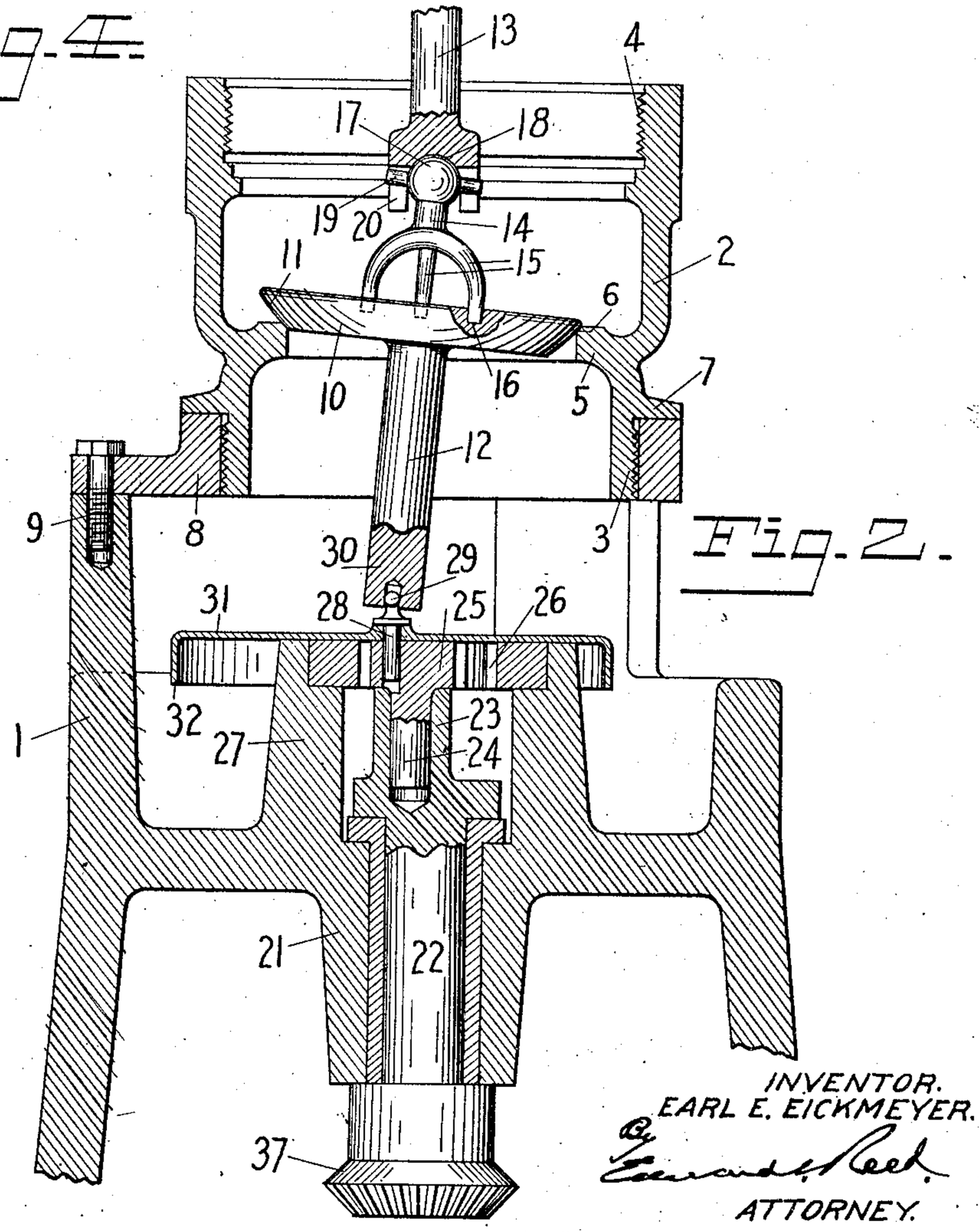

Fig. 2.

INVENTOR.
EARL E. EICKMEYER.
By Edmund C. Reed.
ATTORNEY.

Patented Mar. 20, 1928. 1,663,447

UNITED STATES PATENT OFFICE.

EARL E. EICKMEYER, OF DAYTON, OHIO, ASSIGNOR TO THE NATIONAL RECORDING PUMP COMPANY, OF DAYTON, OHIO, A CORPORATION OF OHIO.

DEVICE FOR LAPPING IN VALVES.

Application filed March 31, 1924. Serial No. 703,089.

This invention relates to a device for lapping in valves. In devices of this kind it has been customary to rotate the valve in a fixed plane thereby dressing or lapping in only that portion of the surface of the valve which engages the valve seat when the valve is in a single predetermined position. If the valve is tilted slightly on its seat the contact is imperfect and the valve will leak. Some valves are provided with contact surfaces which are curved to conform substantially to the contour of a portion of a sphere, so as to fully engage the valve seat when the valve is tilted, and when such a valve is lapped in as above described the spherical surface is deformed, because a portion only thereof will engage the seat during the lapping in operation.

One object of the present invention is to provide a device of this kind which will operate to quickly and accurately fit the valve to the valve seat.

A further object of the invention is to provide such a device which will lap in the entire contact surface of a spherical valve and maintain the same in true spherical form, thus insuring the proper seating of the valve when tilted.

A further object of the invention is to provide such a device which will be simple in its construction, easy to operate and inexpensive to manufacture.

Other objects of the invention will appear as the mechanism is described in detail.

In the accompanying drawings Fig. 1 is a side elevation of a lapping in device and its operating mechanism, embodying my invention; Fig. 2 is a vertical sectional view taken centrally of the lapping in device and partly broken away; Fig. 3 is a plan view of the eccentric gearing; and Fig. 4 is a diagram of the path of movement of the valve tilting member.

In these drawings I have illustrated one embodiment of my invention and have shown the same as designed primarily for lapping in the foot valve of a gasoline pump but it will be understood that the mechanism may take various forms and that the device may be used in connection with valves of various kinds without departing from the spirit of the invention.

In that form here shown the device comprises a supporting structure or main frame 1 having means for supporting thereon an element having an annular part to engage the contact surface of the valve. This annular element corresponds exactly to the valve seat so that when the valve has been finished or lapped in it will fit perfectly on the valve seat. If desired, the valve seat itself is utilized as this annular friction or rubbing element so that the lapping in operation will fit the valve perfectly to the seat with which it is to cooperate when in use. It is not necessary to the operation of the device that the valve seat should be used as the friction member and it will be obvious that a separate friction member may be substituted for the valve housing should this be desirable for any reason, as for example, when it is preferable that the friction member should be formed of metal different from the valve. The particular valve structure here shown comprises a housing 2 having its lower portion provided with external screw threads 3 and its upper end provided with internal screw threads 4 whereby it may be connected with the other elements of the pump mechanism. This housing also has an inwardly extending annular flange 5 the upper corner of which constitutes the valve seat on which the valve member 10 is seated, this corner being, if desired, slightly beveled, as shown at 6, to increase the area of contact. The lower portion of the housing is provided above the threaded portion thereof with an outwardly extending flange 7. When a valve of this character is to be lapped in and the valve seat is to be used as the annular friction element the valve housing 2 is mounted on the supporting structure 1 with the valve in position therein. In order to properly support the valve housing the supporting structure 1 of the present device is provided at its upper end with an annular member or ring 8 which will receive the lower threaded portion 3 of the housing and engage the flange 7 so as to support the housing thereon. I have not found it necessary to provide any means for securing the housing in position on the ring 8 but obviously this could be done if desirable. I prefer that the ring 8 should be separate from the body portion of the supporting structure 1, of which it forms a part, and, as here shown, it is secured to the upper edge of that structure by means of suitable fastening devices, such

as screws 9. By thus making the ring separate from the main supporting structure it can be removed and other rings or devices of different character substituted therefor to support valve housings of different kinds or different sizes. The valve as here shown comprises a disk-like body portion 10, the peripheral or contact surface 11 thereof being curved to conform substantially to a portion of a sphere, the radius of which is such that a straight line extending through the center of the valve and connecting any two points on the periphery thereof will be substantially equal to the diameter of the valve seat. Consequently the contact surface of the valve will properly engage the valve seat when the valve is seated thereon regardless of whether the body of the valve is in a plane parallel with the plane of the valve seat. The valve also has a stem 12 which extends through the valve seat and projects some distance below the same.

When the valve structure as a whole has been mounted on the lapping in device the valve is rotated about an axis extending lengthwise of the housing 2 and during this rotation is moved about a transverse axis to tilt the valve member and thus cause all portions of its contact surface to be brought into contact with the valve seat during the lapping in operation. The transverse axis about which the valve is tilted is preferably substantially coincident with the axis about which the spherical contact surface of the valve is described, thus maintaining the valve at all times in proper relation to its seat. Any suitable means may be provided for rotating the valve with its contact surface in engagement with the annular friction element, or valve seat, and I prefer to provide a rotatable actuating device which is arranged above the valve seat for rotation about an axis extending lengthwise of the housing and, as here shown, this actuating device is in the form of a spindle 13. Interposed between the actuating device and the valve is a connecting member 14 which, in the present construction, is in the form of a spider having three arms 15, the lower ends of which are seated in recesses formed in the upper surface of the valve. The upper end of the connecting member is pivotally connected with the rotatable actuating device and held against rotation relatively thereto. Preferably the connection between the actuating device and the connection member is a universal one so that the axis about which the connecting member moves may intersect the axis of the actuating device in any direction. As here shown, the upper end of the connecting member is provided with a spherical head 17 which is seated in a socket 18 carried by the lower end of the spindle 13. This spherical head is provided with pins 19 which extend into slots 20 formed in walls of the socket, thereby holding the spindle and the connecting member against relative rotation.

The means for tilting the valve during the rotation thereof may take various forms but this mechanism should be of such a character that the valve will be rocked about the axis of the connecting member more or less frequently during its rotation. This tilting or rocking movement of the valve not only brings all parts of the contact surface of the valve into engagement with the valve seat but it causes this surface to engage the valve seat with a wiping action which expedites the dressing or lapping in of the parts. The means for so tilting the valve preferably comprises an actuating member which is movable transversely to the axis of rotation of the valve and has movement toward and from said axis in different paths. In the present construction I have provided the main supporting structure 1, in the lower portion thereof, with a vertical bearing 21 in which is journaled a shaft 22 the upper end of which has formed therein a vertical bearing 23 arranged eccentrically to the axis of the shaft 22. Journaled in the bearing 23 is a stud 24 having secured to its upper end, and preferably formed integral therewith, a pinion 25 which rests on the upper end of the shaft 22 and is rotatable relatively thereto. This pinion is arranged within and meshes with an internal gear or annular rack 26 of a diameter somewhat greater than the diameter of the pinion. This internal gear is supported by an annular boss 27 extending upwardly about the upper end of the shaft 22 and is held against relative rotation to that boss. Consequently as the pinion 25 rotates about the axis of the shaft 22 it will travel about the internal gear and will be rotated thereby. Mounted on the pinion and arranged eccentrically of the axis thereof is an actuating member, here shown as a pin 28 seated in the pinion 25 and extending above the same. The upper end of this pin is so connected with the stem 12 of the valve as to cause the lower end of the valve stem to move therewith. In the present instance, the upper end of the stem has a spherical head 29 arranged within a socket 30 in the lower end of the valve stem. If desired, a protecting cover may be provided to prevent the entrance of metal dust or other foreign matter into the gearing and bearings of the tilting mechanism. As here shown, this cover is in the form of a plate 31 resting upon the upper end of the boss 27 and having a depending flange 32. The pin 28 extends through this cover and thus serves to connect the same with the pinion so that it will move therewith, the diameter of the cover being sufficient to permit of this movement with relation to the boss. It will be apparent that the double eccentric movement

thus imparted to the actuating member 28 will carry the lower end of the valve stem transversely to the axis of rotation of the valve and will cause the valve to be tilted first in one direction and then in another. The path of movement of this actuating device is along a series of transverse lines which intersect one another and this path extends toward and from the axis of rotation of the valve in various directions. The path defined by the actuating device in one complete rotation of the shaft 22 will be approximately that shown in the diagram of Fig. 4 and, as will be noted, comprises a series of loops extending radially from the axis of rotation of the valve. It will be understood, of course, that this path may take various forms.

The driving mechanism for the lapping in device may take any suitable form but, in the present instance, I have associated this device with a driving mechanism similar to a drill press. The supporting structure 1 is mounted on a base 33 from which a standard 34 extends upwardly, this standard having its upper end turned at an angle thereto and provided with a vertical bearing 35 in which the spindle 13 is journaled. A driving shaft 36 is journaled in the lower portion of the standard 34 and extends into the supporting structure 1 where it is connected by means of beveled gearing 37 with the shaft 22. The outer end of the shaft 36 is provided with a driving pulley 38 and with a series of stepped transmission pulleys 39, any one of which may be connected by means of a belt 40 with a pulley 42 on the upper end of the spindle 13. The ratio of the driving connection between the spindle and the shaft 22 is preferably such that the spindle will rotate at a considerably greater speed than the shaft 22.

While I have shown and described one embodiment of my invention I wish it to be understood that I do not desire to be limited to the details thereof as various modifications may appear to a person skilled in the art.

Having now fully described my invention, what I claim as new and desire to secure by Letters Patent, is:

1. In a mechanism of the character described, an element having an annular part to engage the surface of a valve, means for rotating said valve in contact with said part, and a device having movement transverse to the axis of rotation of said valve and adapted to be operatively connected with said valve independently of said actuating device.

2. In a mechanism of the character described, an element having an annular part to engage the surface of a valve, means for rotating said valve in contact with said part, and a device having movement in a plurality of different directions transverse to the axis of rotation of said valve and adapted to be operatively connected with said valve.

3. In a mechanism of the character described, an element having an annular part to engage the surface of a valve, means for rotating said valve in contact with said part, and a device having movement in intersecting paths transverse to the axis of rotation of said valve, and adapted to be operatively connected with said valve.

4. In a mechanism of the character described, an element having an annular part to engage the surface of a valve, means for rotating said valve in contact with said part, and a device having movement in paths which form a plurality of loops extending in different directions from the axis of rotation of said valve, said device being adapted for operative connection with said valve.

5. In a device of the character described, an element having an annular part to engage the surface of a valve, a rotatable actuating device, a connecting member interposed between said actuating device and said valve and pivotally connected with said actuating device, and a device movable in a path transverse to the axis of said actuating device and adapted to be connected with that side of said valve opposite said actuating device to move said valve about the axis of said connecting member.

6. In a mechanism of the character described, an element having an annular part to engage the surface of a valve and through which the stem of said valve extends, a rotatable actuating device, a connecting member interposed between said valve and said actuating device and pivotally connected with said actuating device, and a device movable transversely to the axis of said actuating device and adapted to engage the stem of said valve to move the latter about the axis of said connecting member.

7. In a mechanism of the character described, an element having an annular part to engage the surface of a valve and through which the stem of said valve extends, a rotatable actuating device, a connecting member interposed between said valve and said actuating device and pivotally connected with said actuating device, a device rotatable about an axis substantially parallel with the axis of said actuating device and having a part arranged eccentrically thereof and adapted to be connected with the stem of said valve.

8. In a mechanism of the character described, an element having an annular part to engage the surface of said valve, a rotatable actuating device, a connecting member interposed between said actuating device and said valve and pivotally connected with said actuating device, a shaft rotatable about an axis substantially parallel with the axis of said actuating device, and a part eccentri-

cally connected with said shaft and adapted to be connected with said valve to move the same about the axis of said connecting member.

9. In a mechanism of the character described, an element having an annular part to engage the surface of a valve, a rotatable actuating device, a connecting member interposed between said actuating device and said valve and pivotally connected with said actuating device, a shaft rotatable about an axis substantially parallel with the axis of said actuating device, a part eccentrically connected with said shaft and rotatable relatively thereto, and a second part eccentrically mounted on the first mentioned part and adapted to be connected with said valve.

10. In a mechanism of the character described, an element having an annular part to engage the surface of a valve, a rotatable actuating device, a connecting member interposed between said actuating device and said valve and pivotally connected with said actuating device, a shaft rotatable about an axis substantially parallel with the axis of said actuating device, a pinion rotatably mounted on said shaft eccentrically to the axis thereof, an annular rack surrounding said pinion and meshing therewith, and a part mounted on said pinion eccentrically to the axis thereof for connecting the same with said valve.

11. In a mechanism of the character described, an element having an annular part to engage the surface of a valve and through which the stem of said valve extends, a rotatable actuating device, a connecting member interposed between said valve and said actuating device, and pivotally connected with said actuating device, a shaft rotatable about an axis substantially parallel with the axis of said actuating device, a pinion carried by said shaft for rotation about an axis parallel with but out of line with said axis, an annular rack surrounding said pinion and meshing therewith, and a part mounted on said pinion out of line with the axis thereof and adapted to engage the stem of said valve.

12. In a mechanism of the character described, a structure having means to support a housing having a valve chamber and a valve seat within said chamber, an actuating device to rotate a valve on said seat, and means carried by said structure on that side of said valve opposite said actuating device for tilting the valve while it is being rotated.

13. In a mechanism of the character described, a structure having means to support a housing having a valve chamber and a valve seat within said chamber, a spindle rotatable about an axis extending lengthwise of said housing, a member for connecting said spindle with a valve on said valve seat, said member having universal pivotal connection with said spindle, a device movable in a path transverse to the axis of said spindle for moving said valve about the axis of said connecting member.

14. In a mechanism of the character described, a structure having means to support a housing having a valve chamber and a valve seat within said chamber, an actuating device mounted for rotation about an axis extending lengthwise of said housing, a member to connect said actuating device with said valve, said member being pivotally connected with said actuating device, a shaft rotatable about an axis substantially parallel to the axis of said actuating device, and a part eccentrically connected with said shaft adapted to impart movement to said valve about the axis of said connecting member.

15. In a mechanism of the character described, a structure having means to support a housing having a valve chamber and a valve seat within said chamber, an actuating device mounted for rotation about an axis extending lengthwise of said housing, a member to connect said actuating device with said valve, said member being pivotally connected with said actuating device, a shaft mounted for rotation about an axis substantially parallel with the axis of said actuating device, a pinion rotatably mounted on an axis extending parallel to but offset from the axis of said shaft, a fixed annular rack with which said pinion meshes, and a part carried by said pinion and arranged eccentrically to the axis thereof for imparting movement to said valve about the axis of said connecting member.

16. In a mechanism of the character described, a stationary element having an annular part to engage the surface of a valve, and separately operated devices each having means for connecting it with said valve, for rotating said valve in contact with said part and for tilting said valve with relation to said part during the rotation of said valve.

17. In a mechanism of the character described, a stationary element having an annular part to engage the surface of a valve, and devices having means for separately connecting the same with said valve for rotating said valve in contact with said part about a longitudinal axis and for simultaneously moving said valve about an axis transverse to the first mentioned axis, each of said devices having its own drive.

18. In a mechanism of the character described, a stationary element having an annular part to engage the surface of a valve, and devices having means for separately connecting the same with said valve for rotating said valve in contact with said part and for tilting said valve in different directions with relation to said part during the rotation of said valve, each of said devices having its own drive.

19. In a mechanism of the character described, a stationary element having an annular part to engage the surface of a valve, a rotatable actuating device arranged above said part, a connecting member engaging said valve and pivotally connected with said actuating device at a point spaced from said valve for movement about a transverse axis, and driven means directly actuating said valve to cause said valve to move about said transverse axis of said connecting member while it is being rotated by said actuating device.

20. In a mechanism of the character described, a stationary element having an annular part to engage the surface of a valve, a rotatable actuating device spaced from said part, a connecting member having universal connection with said actuating device and engaging said valve to rotate the same, and driven means directly actuating said valve independently of said connecting member for tilting said valve with relation to said part of said element.

21. In a mechanism of the character described, a stationary element having an annular part to engage the surface of a valve, a spindle rotatable about an axis extending through said annular part and having a socket, a connecting member having a head seated in said socket and held against rotation relatively thereto, the other end of said connecting member engaging said valve to impart rotation thereto, and driven means directly actuating said valve for tilting said valve and said connecting member with relation to said spindle.

22. In a mechanism of the character described, a stationary element having an annular part to engage the surface of a valve, an actuating device rotatable about an axis extending through said annular part, a connecting member pivotally secured to said actuating device for movement about a transverse axis and having a plurality of arms to engage recesses in said valve, and means independent of said connecting member to directly engage said valve and positively move said valve about said transverse axis of said connecting member.

23. In a mechanism of the character described, a structure having stationary means to support a housing having a valve chamber and a valve seat within said chamber, an actuating device to rotate a valve on said seat, and driven means separate from said actuating device and acting directly on said valve for tilting said valve while it is being rotated.

In testimony whereof, I affix my signature hereto.

EARL E. EICKMEYER.