March 20, 1928. 1,663,253

H. J. HILLBORN

PUMP ATTACHMENT FOR OUTBOARD MOTOR ENGINES

Filed Dec. 24, 1926

FIG. 2.

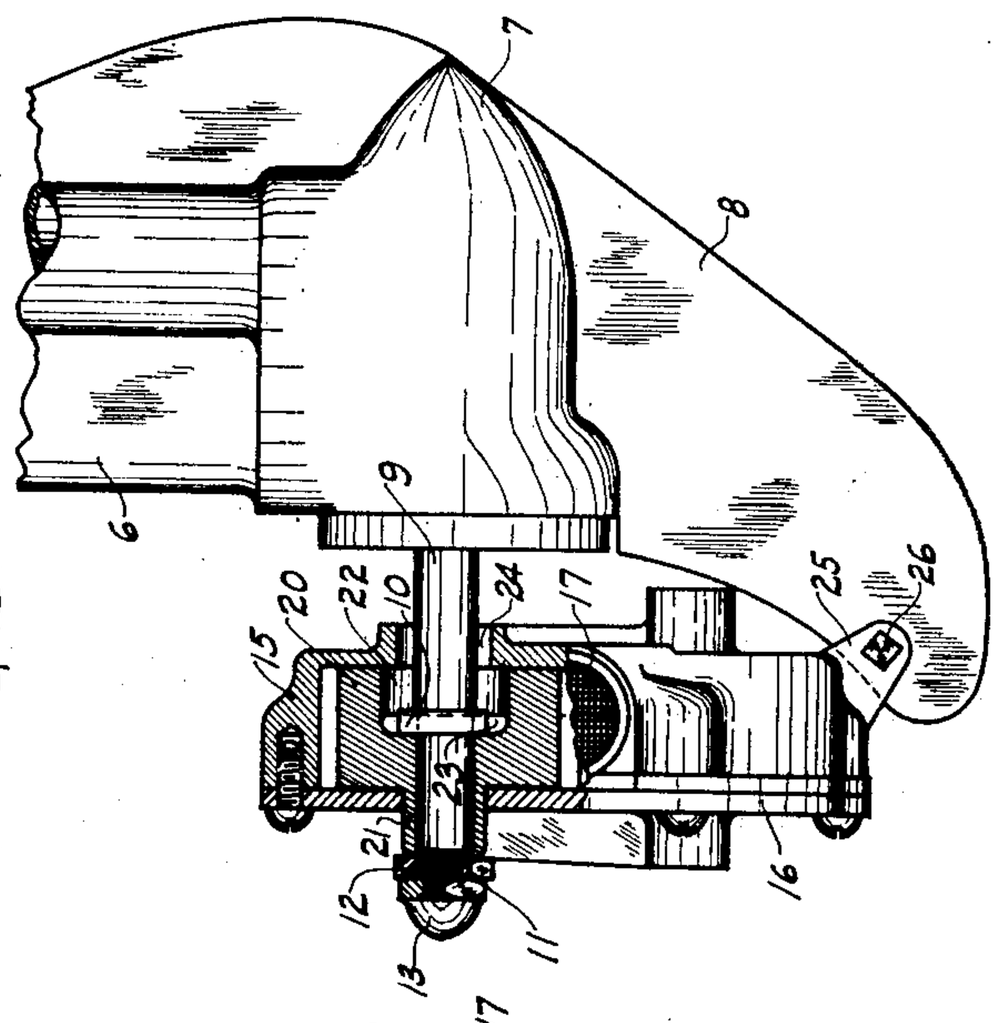

FIG. 1.

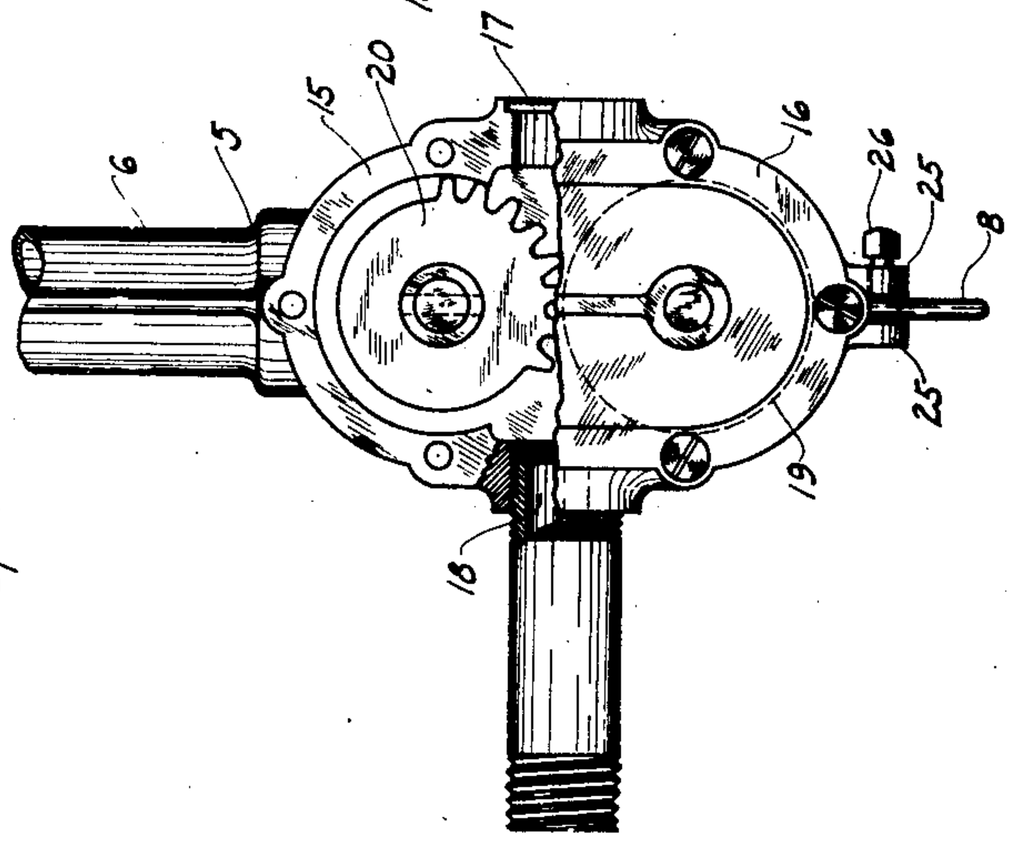

INVENTOR.
Herbert J. Hillborn
BY
Erwin, Wheeler & Woolard,
ATTORNEY.

Patented Mar. 20, 1928. 1,663,253

UNITED STATES PATENT OFFICE.

HERBERT J. HILLBORN, OF MILWAUKEE, WISCONSIN, ASSIGNOR TO EVINRUDE MOTOR COMPANY, OF MILWAUKEE, WISCONSIN, A CORPORATION OF WISCONSIN.

PUMP ATTACHMENT FOR OUTBOARD-MOTOR ENGINES.

Application filed December 24, 1926. Serial No. 156,822.

This invention relates to improvements in pump attachments for outboard motor engines.

It is the object of the invention to provide means for utilizing an outboard motor engine as a source of power for pumping water. There are many circumstances in which a summer resorter requires a pump, either for fighting fire or watering a lawn, or filling a supply tank. It is the object of the invention to provide a special pump readily applicable to an ordinary outboard motor for these and many other purposes.

It will be obvious that in order for a pump attachment to be practical it must be readily applicable and removable with reference to the motor with which it is to be used; it must also be of light weight and simple construction. It is the further object of this invention to satisfy these various requirements.

In the drawings:

Figure 1 is a rear elevation of a device embodying this invention, a pump being connected to the submersible parts of an outboard motor and portions of the pump casing being broken away to expose its interior construction.

Figure 2 is a side elevation of the parts shown in Figure 1, portions of the pump casing being broken away to a vertical axial section.

Like parts are identified by the same reference characters throughout the both views.

The submersible parts of the outboard motor are indicated generally by the reference character 5. They include the vertical drive shaft housing 6, gear housing 7, the housing extension or skeg 8, and propeller shaft 9. The general arrangement of these parts is widely known, and in all details not herein disclosed may be considered to correspond to the disclosure of patent to James A. Mould, No. 1,553,182, dated September 8, 1925.

It is the well known function of the skeg 8 to protect from injury a propeller mounted on the propeller shaft 9, and, incidentally, to assist in steering the craft to which the outboard motor is attached. It will be noted that the propeller shaft 9 is provided with a shear pin 10 in the usual way to impart rotation to a propeller mounted on said shaft. The reduced extremity 11 of the propeller shaft is threaded to receive nut 12 and lock nut 13, whereby a propeller may be fastened on the shaft in operative engagement with the shear pin 10 therein.

The present invention contemplates the bodily removal of the propeller from shaft 9 and the substitution of a pump on such shaft to be supported in part therefrom and driven thereby. It is obviously immaterial what type of pump is so used. Gear pumps of all sorts, centrifugal pumps, and pumps having rotatable or reciprocable pistons, are among the various types that suggest themselves for the purpose. By way of illustration there is shown herein an ordinary gear pump, and this may be understood to exemplify the application of any desired type of pump in the particular relation contemplated by this invention.

The pump casing 15 has a removable face plate 16 and is provided with a screened inlet port at 17 and a delivery port at 18 to which a hose or other delivery pipe may be connected. In the lower part of the casing is journaled an idler gear 19. In the upper part of the casing is a complementary gear 20 meshing with the idler and confined closely between the face plate and the opposed casing wall. Gear 20 has a hub portion 21 which projects through an opening in the face plate and is of a diameter to receive the propeller shaft 9. The interior of gear 20 is hollowed out at 22 and is provided at 23 with a transverse channel of a size to receive the shear pin 10, whereby the gear may be keyed to the propeller shaft by the shear pin in the same relation which the propeller ordinarily bears to such shaft to receive power therefrom. The arrangement is such that the nuts 12 and 13 may be used to tighten and hold gear 20 upon the propeller shaft in operative engagement upon the driving shear pin 10. The gear casing 15 has an opening at 24 of sufficient size to permit the bodily insertion therethrough of the shear pin 10 assembled in the propeller shaft as shown.

It will be obvious from the foregoing description that upon the removal of the propeller from the propeller shaft of an ordinary outboard motor, a pump embodying this invention may be slipped onto the shaft in place of the propeller and the pump gear may be secured for rotation with the shaft by the same means used to hold the propeller

thereon. Gear 20 is wholly supported by the propeller shaft and casing 15 is also supported therefrom except in so far as it is necessary to secure the casing against rotation with the shaft.

For this purpose casing 15 is provided with spaced ears 25 which are adapted to embrace between them the lower extremities of the skeg 8. A set screw 26 in one of such ears may be tightened upon the skeg to hold the casing rigid.

In order to mount or dismount a pump in accordance with this invention, it is only necessary to adjust nuts 12 and 13 and the set screw 26. It will be obvious, therefore, that it is an extremely simple matter to make temporary use of the entire power output of an outboard motor for the operation of a pump in accordance with this invention. A pump of the relative proportions indicated will force water through 200 feet of garden hose with sufficient pressure to throw a good stream over a cottage. It is, therefore, adapted to provide adequate fire protection at low cost in addition to serving the many other purposes for which such a pump may be used.

I claim:

1. The combination with the submersible parts of an outboard motor including a propeller shaft, gear housing and skeg; of a pump including a casing apertured to receive said shaft and detachably connected with said skeg.

2. The combination with the submersible parts of an outboard motor including a propeller shaft, gear housing and skeg; of a pump including unitarily a casing and a rotor therein and detachably connected with said parts, said rotor being detachably mounted on said shaft in the place of a propeller and said casing being supported in part from said shaft and being connected with said skeg.

3. A pump adapted to replace the propeller of an outboard motor propulsion unit, said pump including a casing provided with a skeg-engaging clamp and a shaft-engaging rotor.

4. A pump adapted to replace the propeller of an outboard motor propulsion unit, said pump including a casing apertured to receive the propeller shaft of such a motor, a pump rotor within said casing having a recess aligned with said aperture and adapted to receive such a shaft, and a clamping member connected with said casing and adapted to engage a fixed part adjacent said shaft, whereby to secure said casing against rotation.

5. A pump adapted to be unitarily and detachably secured to the propeller shaft of an outboard motor, said pump including an apertured casing adapted to receive the propeller shaft and shear pin of such a motor, a pump rotor within said casing in axial alignment with said aperture and provided with a sleeve projecting from said casing and adapted to fit upon such a shaft, and a clamping means connected with said casing and adapted to engage a fixed part adjacent said shaft.

6. The combination with an outboard motor including the usual fixed housing extending downwardly from the explosion cylinders, the gears, and the propeller shaft, of a pump including a casing receiving said shaft and detachably connected with said housing.

7. The combination with the submersible parts of an outboard motor including a propeller shaft and a housing for the latter, of a pump comprising a rotor apertured to receive said shaft, and a casing for said rotor, said casing and rotor being both supportable on said shaft and unitarily removable therefrom, and means to connect said casing to said housing to prevent rotation of the former when the pump is supported on said shaft.

8. The combination with a propeller shaft, of an outboard motor, said shaft having a laterally projecting drive lug, of a pump comprising a casing and a rotatable element, said casing having an aperture to permit the passage therethrough of said shaft and lug, said rotatable element having an aperture to receive said shaft and an abutment for said lug whereby said element is rotatable from said shaft, and means to restrain said casing from rotation.

9. The combination with a propeller shaft, of an outboard motor, said shaft having a laterally projecting drive lug, of a pump comprising a casing and a rotatable element, said casing having an aperture to permit the passage therethrough of said shaft and lug, said rotatable element having an aperture to receive said shaft, and an abutment for said lug whereby said element is rotatable from said shaft, means to restrain said casing from rotation, and removable abutment means at the end of said shaft to retain the pump in operative position.

10. The combination with an outboard motor propeller shaft having a threaded extremity, and a transverse drive pin spaced from said extremity, of a pump casing apertured to receive said shaft and pin, a rotor within said casing having a hub sleeve projecting therefrom in the direction of the threaded end of the shaft, said rotor having an aperture for the operative reception of said shaft and pin, means for securing said casing against rotation, and a nut on the threaded end of said shaft abutting the end of said sleeve, said nut and pin fixing the axial position of said rotor and casing with reference to said shaft.

HERBERT J. HILLBORN.