March 20, 1928. 1,663,189

A. BERGSTROM

CABLE CUTTER

Filed Jan. 13, 1927

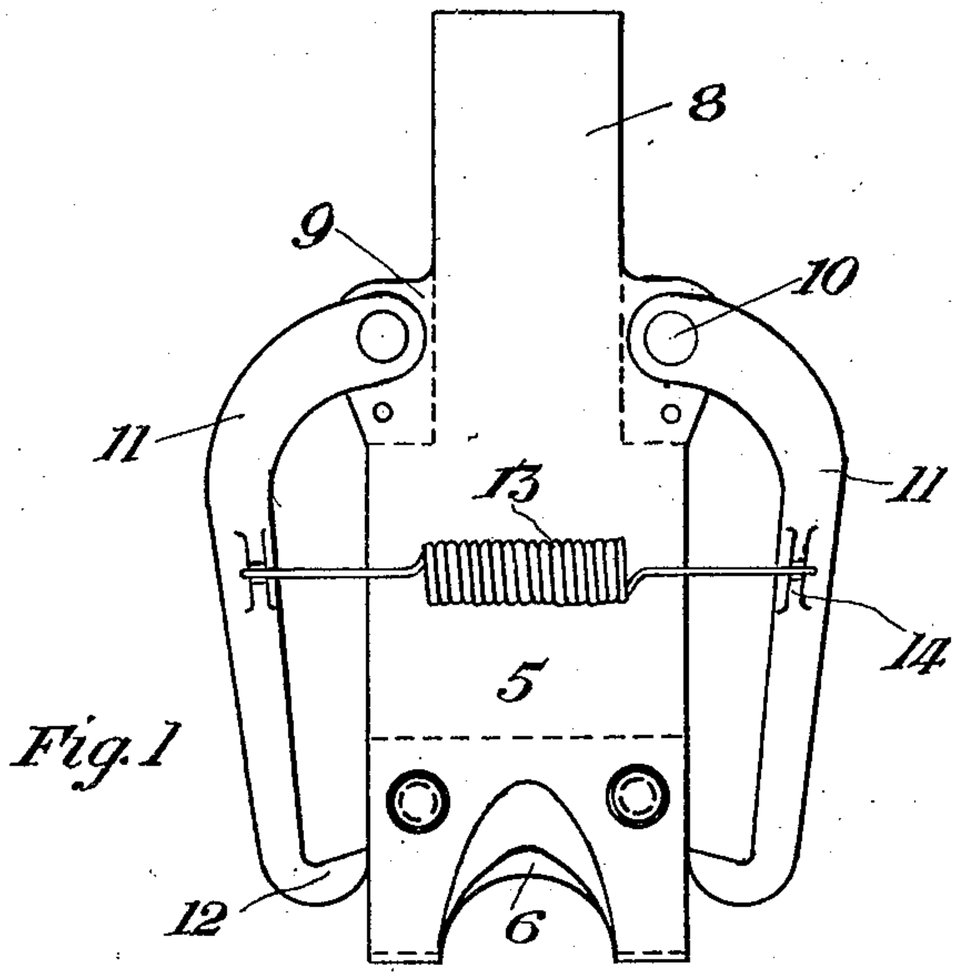

Fig. 1

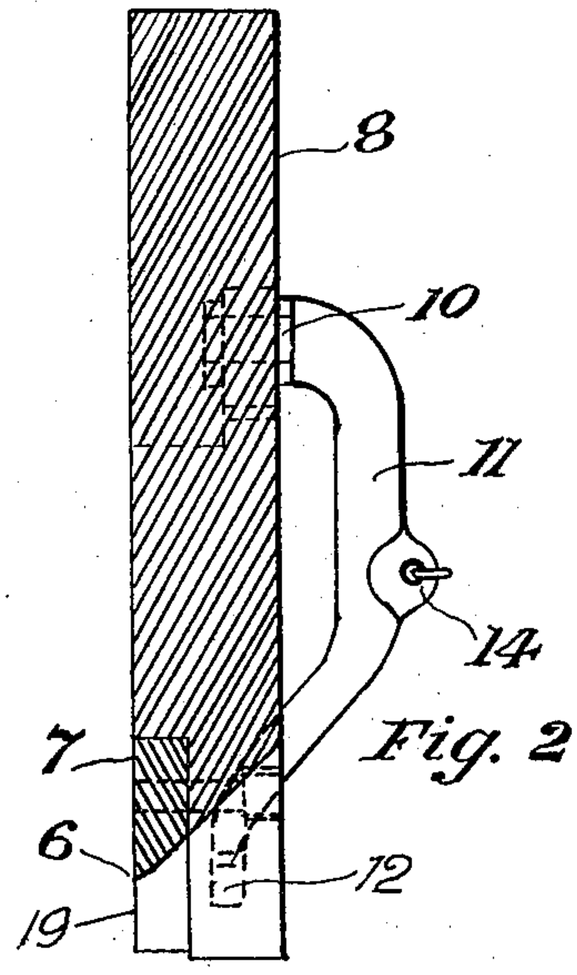

Fig. 2

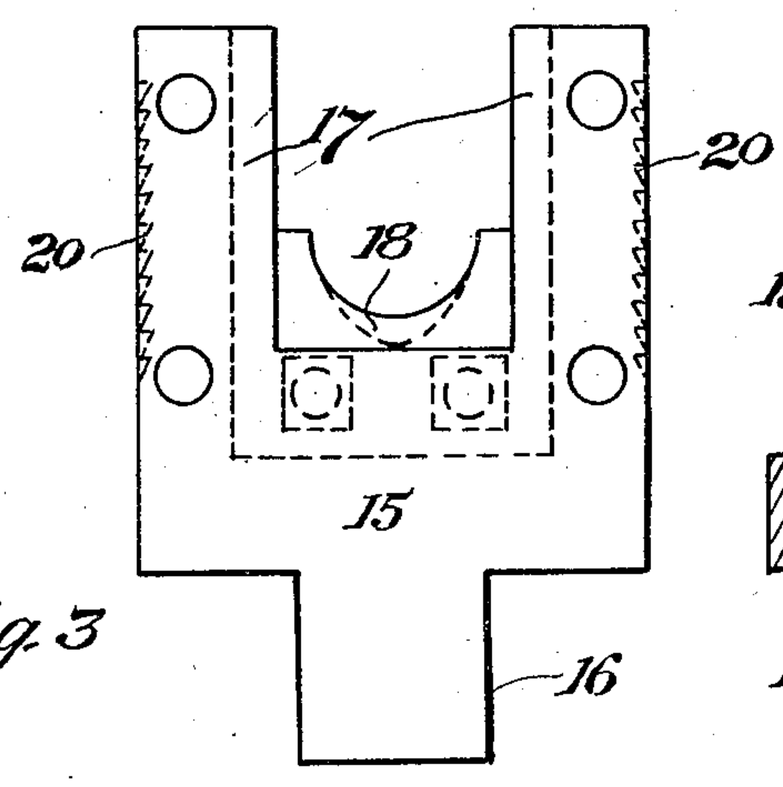

Fig. 3

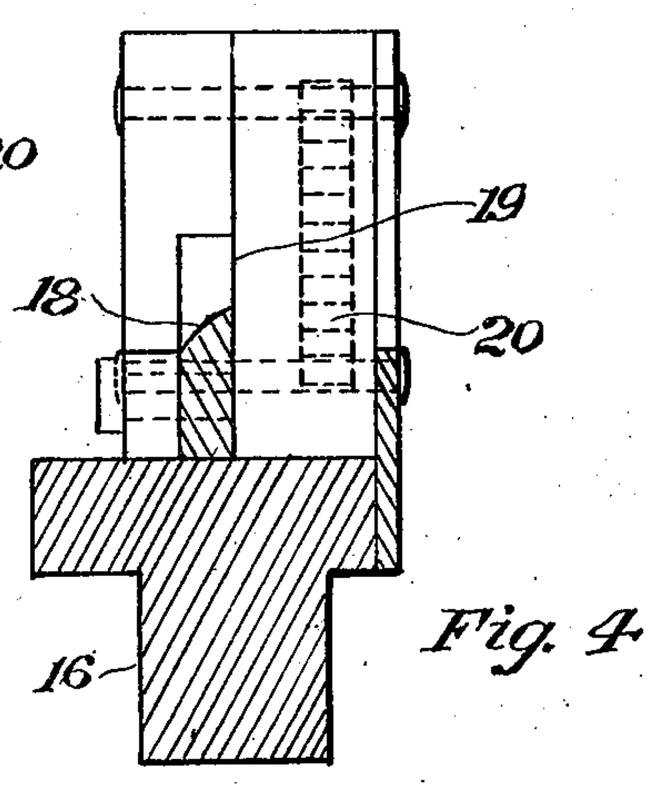

Fig. 4

Alfred Bergstrom
Inventor.

By L. Boyden
Attorney.

Patented Mar. 20, 1928. 1,663,189

UNITED STATES PATENT OFFICE.

ALFRED BERGSTROM, OF VANCOUVER, BRITISH COLUMBIA, CANADA.

CABLE CUTTER.

Application filed January 13, 1927. Serial No. 160,891.

This invention relates to a portable cable cutting device and has for its object the provision of a tool of this character which is simple in form, easily used and transported and cannot readily be injured by the rough usage to which such tools are invariably subjected, particularly in the logging industry.

A further object attained is that in consequence of the positive and correct disposition of the actual cutting edges the action of the tool is exceptionally rapid and effective; so much is this the case that a cable of considerable size when held between supports may easily be severed by the tool when manually supported.

The essential elements of the construction adopted in this invention consists of two opposing concavely curved steel cutters sliding in a guide against each other in the same plane, thus producing a perfect shearing stress on the cable, the stress being effected by hammer blows which are followed up by a simple ratchet device to retain their successive effect and prevent any rebound of the cutters.

The invention is fully described in the specification following together with the drawings herewith which form part of this application and in which:

Fig. 1 is a front elevation of the movable cutter member (or chisel member).

Fig. 2 is a longitudinal section of the same on its centre line.

Fig. 3 is a front elevation of the stationary member containing the internal guide for the chisel member, and

Fig. 4 is a longitudinal section of Figure 3 on its centre line.

Taking the drawings in detail and noting that similar numerals in the different views indicate identical parts, the movable or chisel-member is indicated by 5, its curved and angular cutting edge by 6, this being preferably on a separate and removable member 7.

The body of the member 5 terminates in the hammer-faced projections 8 and has on each side extensions or ears 9 which carry the fulcrum pins 10 of the two levers 11. These levers each have at their free extremities a claw-like projection 12 which acts as a ratchet catch to secure the linear effect of the hammer blow delivered upon the face 8. The levers 11 are held in engagement with the ratchet rack by the helical extension spring 13 which engages both levers at 14.

The body of the U-shaped member is indicated at 15. This member also has a projection 16 on its outer end which acts as a convenient pedestal or foot. The interior of the U-shaped member has a slide and guide 17 suitable to receive the cutter end of the chisel-member 5, and has also a corresponding concavely curved angular cutting edge 18 also removably attached to the body member.

The two cutters come into slidable contact with each other on a flat face 19 and thus effect a perfect shearing action on the cable inserted between them.

On each side of the member 15 is formed a ratchet rack 20. The angularity of these teeth are such that their apices point downwards towards the foot 16 and thus serve to retain the claw ended levers when the chisel member is struck for the purpose of severing a cable. In this connection it may be noted that in practical use the claws do not wear the ratchet points so much as they deepen the tooth and increase the holding effect.

Having now particularly described my invention, what I claim and desire to be protected in by Letters Patent, is:

1. In a device for cutting cables the combination comprising, a pair of concavely curved angular edged cutters sliding one against the other, one of said cutters being adapted to slide past the other by hammer blows delivered upon a projection on it, and means for intercepting the reaction of the said blows upon the cutter so that the latter may be in effective contact with a cable during successive blows, the said means comprising claw-like arms in pivotal connection with the said hammer driven cutter engaging corresponding ratchet-racks on the other said cutter.

2. In a device for cutting cables the combination comprising, a U-shaped member having a foot projecting from its closed end, parallel guides opposite each other on the inner sides of the said U-shaped member, a concavely curved angular edged cutter at the inner end of said guides, a ratchet-like rack formed on the outer sides of the said V-shaped member, a chisel member having a concavely curved angular-edged cutter at one extremity and a hammer-faced projection at the other extremity, the said chisel member being adapted to slidably contact the said U-shaped member and to movably

fit within the said guide, ears extending from the sides of the said chisel member, the said ears carrying pivotal pins, a pivotal claw-like arm of the character of an elongated C on each side of said chisel member fulcrumed on said pins, the claw-like extremities of the said arms being adapted to each engage the ratchet-like rack on each corresponding side of the said U-shaped member, the engagement of the said claws and the said rack being adapted to prevent any appreciable backward movement of the said chisel member when the latter is driven into the said guide by hammer blows, a helical spring uniting the two said members at points intermediate the said pivot pins and said claw-like extremities, said spring being adapted to cause the engagement of the said claws with the said racks.

In testimony whereof I affix my signature.

ALFRED BERGSTROM.