March 20, 1928. 1,663,167

W. KOESTER

MASSAGE APPARATUS

Filed June 15 1927

FIG. 1

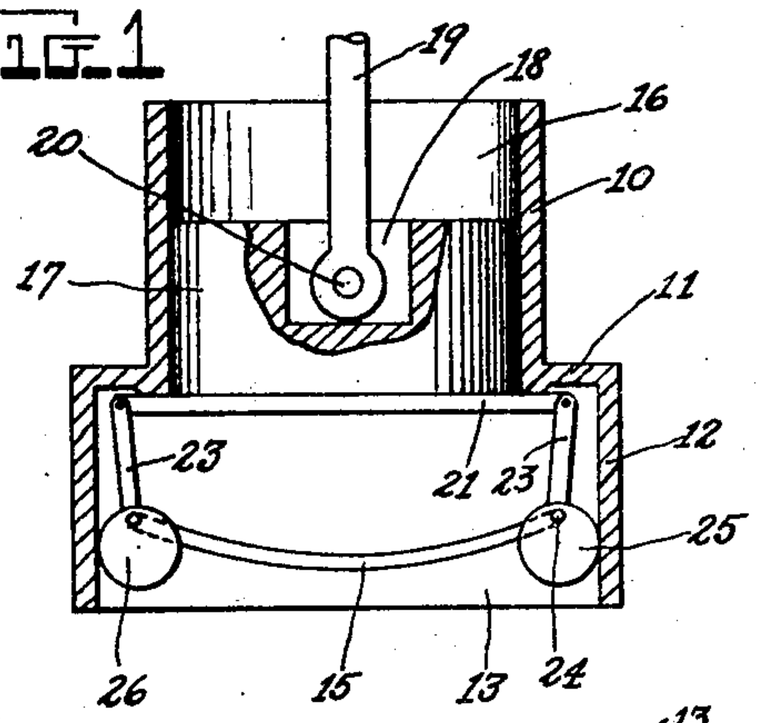

FIG. 2

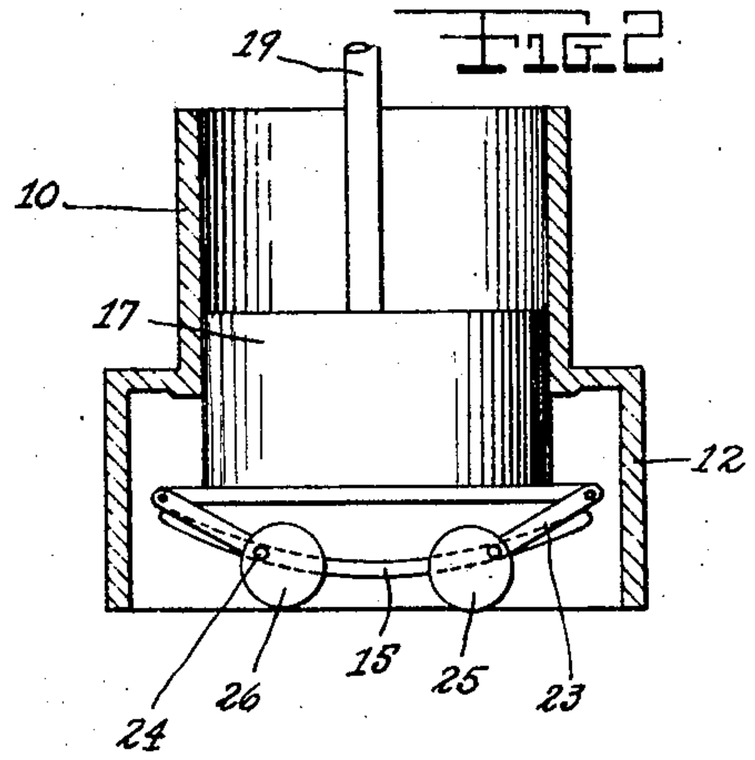

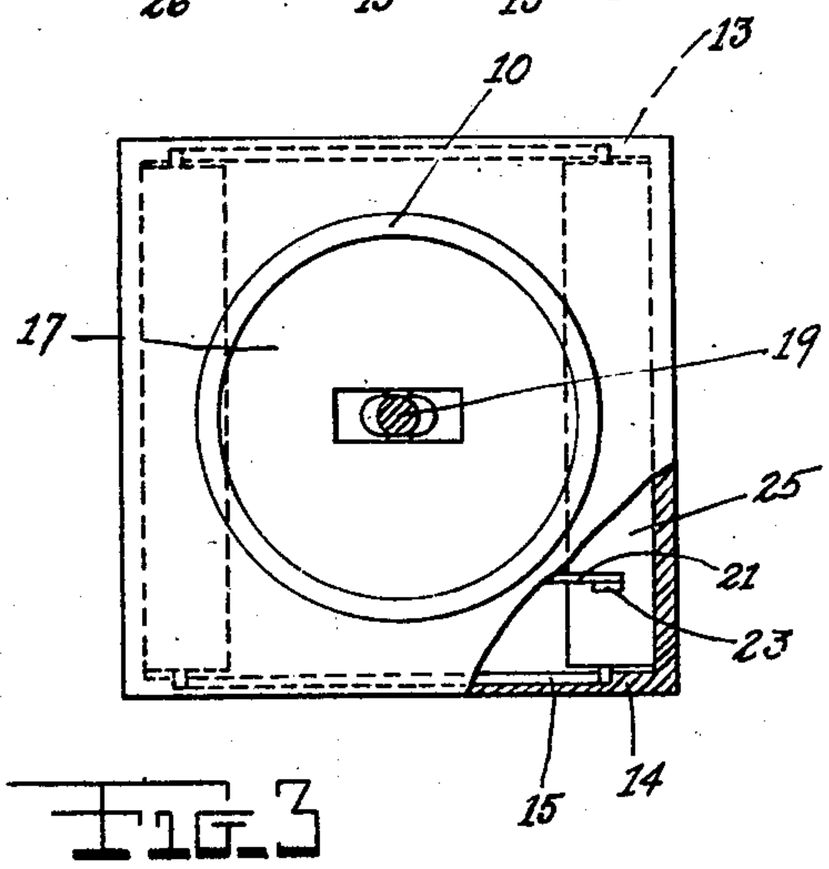

FIG. 3

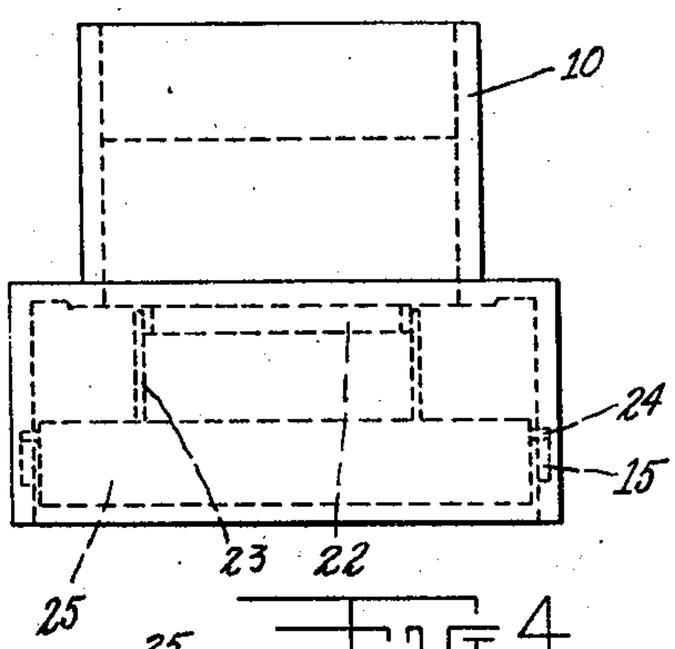

FIG. 4

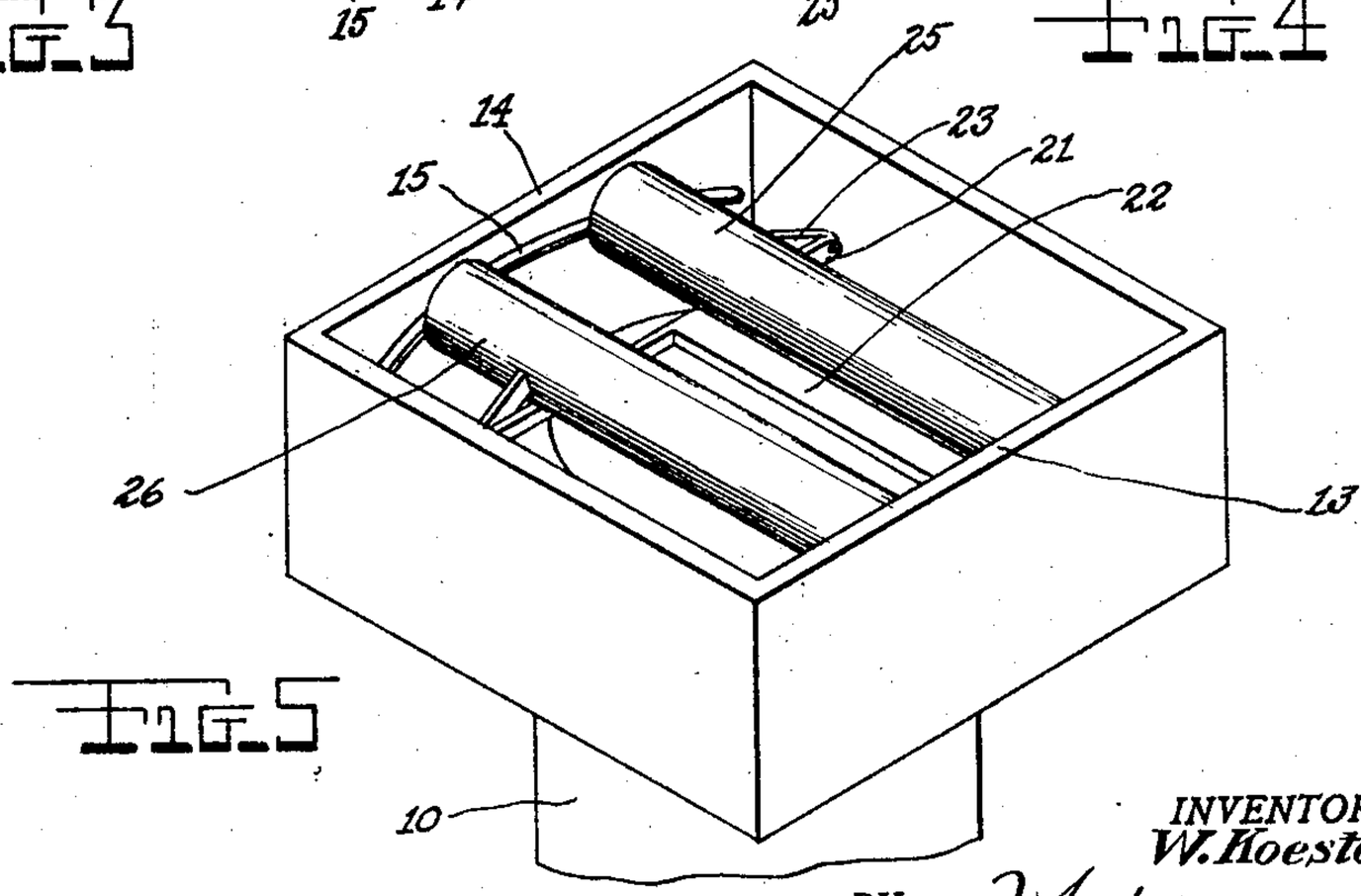

FIG. 5

INVENTOR
W. Koester
BY J. Lederman
ATTORNEY

Patented Mar. 20, 1928. 1,663,167

UNITED STATES PATENT OFFICE.

WALTER KOESTER, OF NEW YORK, N. Y.

MASSAGE APPARATUS.

Application filed June 15, 1927. Serial No. 198,901.

The main object of this invention is to provide a novel type of massaging apparatus which is far more efficient than the present type of massaging cup. This massage apparatus performs two distinct operations simultaneously, employing a plunger which is reciprocal and thru its movement causes the device to act as a vacuum cup, and a pair of agitator rollers which are shifted from non-contacting to contacting position with the skin or surface of the body which is being massaged. In this manner the skin is lifted by the movement of the reciprocating plunger and at the same time is agitated by the rollers within the device.

The above and other objects will become apparent in the description below in which characters of reference refer to like-named parts in the drawing.

Referring briefly to the drawing, Figure 1 is a vertical sectional elevational view showing the plunger and agitator rollers in retracted position.

Figure 2 is a view similar to Figure 1 showing the plunger and agitator rollers in depressed and massaging position.

Figure 3 is a top plan view of Figure 1 with a portion of the housing broken away to expose the agitator roller.

Figure 4 is a side elevational view of the massaging apparatus.

Figure 5 is a perspective view of the massaging apparatus, showing the same in inverted position.

Referring in detail to the drawing, the numeral 10 indicates an annular cylinder which is mounted on the roof 11 of a substantially square housing 12. The parallel walls 13 and 14 bounding the opposing sides of the housing are provided with curved channels 15 which extend from one side to the other. These channels, one in each wall are curved downwardly and have their lowest point at a position intermediate their length.

Within the bore 16 of the cylinder 10 an annular plunger 17 is adapted to be reciprocated alternately up and down. This plunger is provided with a recess 18 which projects downwardly from the top thereof. A pin 20 straddles this recess and serves as a pivotal mounting for a connecting rod 19, which latter at its opposite end is connected to some plunger reciprocating means, not shown on the drawing.

The bottom face of the plunger 17 has mounted thereon a pair of spaced apart fingers 21 which extend parallel to each other and are connected intermediate their length by a bar. The ends of the fingers project outwardly beyond the periphery of the plunger and these ends have the upper ends of link members 23 pivotally secured thereto. These links hang vertically downward and at their lower ends are rigidly secured to the peripheries of the agitator rollers 25 and 26.

The ends or opposing faces of the agitator rollers are provided with pins which are offset from the axis of the rollers and are indicated by the numeral 24, and are engaged in the channels 15 which are located in the side walls 13 and 14.

The massaging apparatus is adapted to be freely moved over any portion of the body and limbs and the connecting rod 19 may be reciprocated by either mechanical means or manually as may be desired. In use the lower open portion of the housing is laid upon that portion of the body which is to be massaged and the plunger 17 is then reciprocated up and down while the entire device is slowly moved over the surface of the body. As the plunger 17 is retracted out of the housing a partial vacuum is formed in the housing thus pulling the skin which lies within the confines of the housing upwardly thereby agitating the same. On the down stroke of the plunger 17 the agitator rollers 25 and 26 will be guided from the position which they assume adjacent the end walls of the housing when the plunger has been extended, to a position near the center of the housing as shown in Figures 2 and 5. As these rollers have the pins 24 mounted at their ends, and the pins being engaged in the channels 15, the rollers will follow a downwardly curved path and at the same time that they are following this curved path the rollers will be slightly rotated eccentrically. By mounting the rollers eccentrically on the pins 24, the peripheries of the rollers begin to contact with the skin confined in the housing and frictionally massage before the rollers pass to the lowest part of the channels.

It is to be noted that certain changes in form and construction may be made without departing from the spirit and scope of the invention.

I claim:

1. In a massaging device, a square housing having an annular cylinder integral there-

with, the side walls of the housing having downwardly curved channels therein, a plunger reciprocal in said cylinder, rollers pivoted to the plunger and hanging suspended when the plunger is in lifted position, and means on the end of said rollers registering in said channels for guiding the rollers in a downwardly curved path into contact with the skin.

2. In a massaging device, a square housing having an annular cylinder integral with and surmounting it, the side walls of the housing having downwardly curved channels therein, the lower portion of said channels being intermediate the length of the channels, a plunger reciprocal in the cylinder and adapted to form a partial vacuum in the housing when the latter is in contact with the skin upon withdrawal of the plunger, and means guided in the channels and enclosed in the housing for agitating the skin under the housing when the plunger is lowered into the cylinder.

3. In a massaging device, a square housing having an annular cylinder surmounting it, the side walls of the housing having downwardly curved channels therein, the intermediate portion of said channels being nearest the lower edge of the housing, a plunger movable in said cylinder, fingers projecting from the bottom of the plunger, links pivotally suspended from said fingers when the plunger is in lifted position, rollers rigid with said links, pins mounted eccentrically on the ends of the rollers and engaging in said channels, said rollers being moved in a downwardly curved path and partly rotated when the plunger is moved to lowered position.

In testimony whereof I affix my signature.

WALTER KOESTER.