Aug. 30, 1927. 1,640,407

G. F. HERBST

AUTOMATIC LUBRICATING CUP

Filed May 28, 1926

Fig. 1.

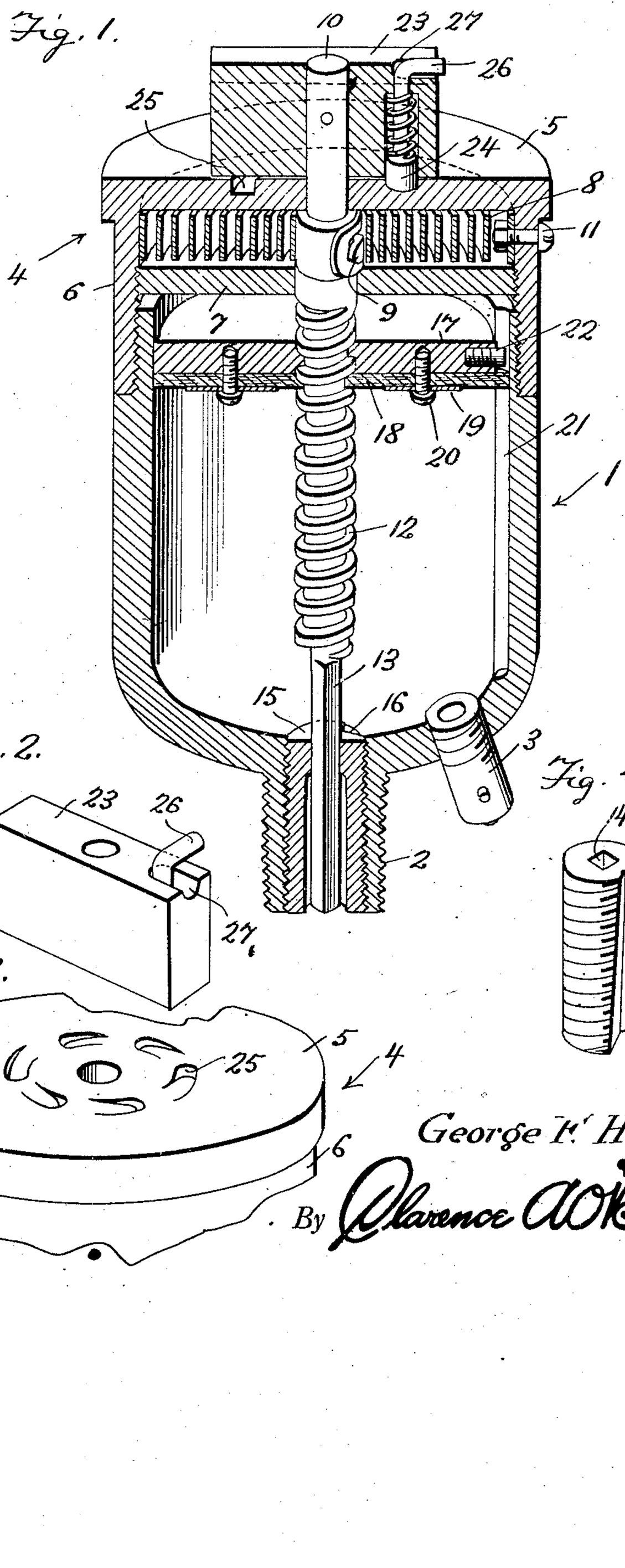

Fig. 2.

Fig. 3.

Fig. 4.

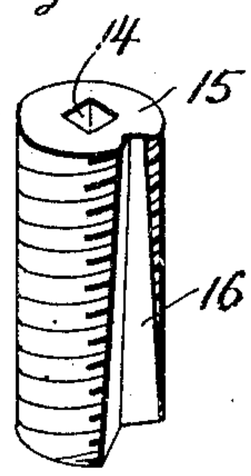

Inventor

George F. Herbst

By Clarence O'Brien

Attorney

Patented Aug. 30, 1927. 1,640,407

UNITED STATES PATENT OFFICE.

GEORGE F. HERBST, OF UNDERHILL, WISCONSIN.

AUTOMATIC LUBRICATING CUP.

Application filed May 28, 1926. Serial No. 112,315.

This invention relates to an improved automatically oiling or lubricating cup for shafts, bearings, journal boxes, and various kinds of machine elements, although the same is especially adapted for use upon automobiles to replace the various kinds of oil cups now employed.

My principal aim is to provide a simple and inexpensive structure of this class wherein a continuous oil supply is insured, the action being such that the oil feed is comparatively slow, and not unduly under such pressure as would tend to squeeze the oil out of the lubricated parts as is frequently the case with the cups now in use.

Briefly, the invention comprises an open top cup adapted to contain the lubricant, this cup being provided with a screw threaded neck adapted to tap into a screw threaded opening in the part to be lubricated. A removable cover is provided for the open top and it carries a clock spring, a winding device therefor, and a feed screw on which the ejecting plunger operates. Then there is a novel flow control device associated with the screw threaded neck at the bottom and the lower end of the feed screw whereby a slow speed of the oil is insured.

It follows, of course, that one of the outstanding objects is to provide novel details for carrying out the above features and advantages, these details being arranged in a compact and convenient manner which insures the production of a practical and positive device assuring efficient results.

Other features, advantages, and objects will become apparent from the following description and drawing.

In the accompanying drawing forming a part of this application and in which like numerals are employed to designate like parts throughout the same:

Figure 1 is a view in section and elevation of a complete oiling device constructed in accordance with the present invention.

Figure 2 is a perspective view of the winding block.

Figure 3 is a perspective view of the top of the removable cover.

Figure 4 is a perspective view of the oil flow control device.

Referring to the drawing in detail, the reference character 1 designates the cup which, as stated, is provided at the center of its bottom with a screw threaded neck 2 which is adapted to be threaded into an opening in the part to be lubricated. This neck is also internally screw threaded for a purpose to be hereinafter made plain. Then too, in the bottom of the cup is a screw threaded hole which is adapted to accommodate a removable plug 3 of suitable construction intended to serve as a coupling for a supply pump. It is understood that the construction of the plug is immaterial and the location of the hole may be at any appropriate point. The removable cover is designated generally by the reference character 4 and this comprises a circular top plate 5 having a depending screw threaded skirt 6 threaded onto the upper end of the body of the cup. This skirt is also internally screw threaded above the top of the cup in order to permit a disk 7 to be fitted into it and this disk is arranged in spaced relation to the top plate 5 in order to form a housing for a clock spring 8. The spring is anchored at its inner end as at 9 to the shaft 10. Then too, it is anchored at its opposite end as at 11 to the removable cover. It is an ordinary clock spring of the flat resilient type, and obviously when it is wound up it tends to rotate the shaft 10. It might be stated here that a portion of the shaft in the cup is provided with threads 12 forming a feed screw. The lower end of the shaft is reduced in diameter as at 13 and made into rectangular cross section, thus providing a key. This key extends into a polygonal socket 14 formed in the top of the flow control plug 15. This plug is threaded into the interior of the neck 2 and is provided in one side with an oil discharge groove 16. At this time I would direct attention to Figure 4 wherein it will be seen that the groove is comparatively shallow and narrow at its top and gradually increased in width and depth toward its bottom. It will thus be seen that the plug is a compensating device and the action of the same with its groove 16 is to permit the outflowing lubricant to have the same pressure at the end of the plunger stroke, regardless of the weakened tension of the spring at this part of the stroke.

Mounted on the threads on the shaft is a plunger 17 provided on its under side with a leather packing element 18. This in held in place by metal washers 19 and retaining screws 20, and it provides a fluid tight joint with the wall of the cup. It will be noted

that the wall is provided with a vertical groove 21 and the plunger carries a removable stud 22 which operates slidably in this groove and prevents rotation of the plunger. Thus when the shaft is rotated the plunger is fed downwardly to forcibly eject the oil.

It is yet to be pointed out that a block 23 is fastened to the upper extended end of the shaft 10 and this carries a spring pressed pawl 24 adapted to be selectively and successively seated in ratchet seats 25 formed in the top plates 5. The pawl is provided at its top with a small handle 26 which may be seated in a notch 27 formed in one end portion of the block.

The operation of the device is as follows. First, the flat spring is wound up and this is accomplished by grasping the block 23 and turning it in an obvious manner, the pawl and ratchet mechanism serving at this time to retain the spring as it is gradually wound. Assuming then that the cup is filled with oil and that the piston is at the top of the cylinder or cup as shown and that the feed plug 15 is threaded all the way down into the neck 2, it will be seen that upon lifting up on the latch of pawl 24, and turning it to the position shown in Figure 2, it will be held disengaged from the ratchet seats. Then the spring will be free to rotate the shaft and in so doing it will feed the plunger 17 downwardly and at the same time screw or feed the plug 15 upwardly, thus providing a larger discharge passage as the oil is ejected from the cup and through the groove 16.

It is believed that by considering the detailed description and the operation in connection with the disclosure made in the drawings, a clear understanding of the invention will be had. Therefore, a more lengthy description is thought unnecessary.

Minor changes coming within the field of invention claimed may be resorted to if desired.

Having thus described the invention, what I claim as new and desire to secure by Letters Patent is:—

1. In a lubricating device of the class described, a lubricant containing cup having a discharge neck at its bottom, a regulating plug threaded into said neck, a rotary shaft in said cup connected at its lower end to said plug for operating the latter, and spring means for operating said shaft.

2. In a lubricating device of the class described, an oil containing cup having a discharge neck at its bottom, a plug threaded into said neck and provided with an oil conducting groove and a polygonal socket, a shaft mounted for rotation in said cup, said shaft being provided with screw threads and with a polygonal portion slidably received in said socket, a plunger threaded on said screw threaded portion, spring means connected with the shaft and with the cup for automatically rotating the shaft, and manually operable means for rotating the shaft in a direction to wind the spring.

3. In a lubricating device of the class described, an open top cup adapted to contain a lubricant, said cup being provided with a screw threaded neck adapted to cap into a screw threaded opening in the part to be lubricated, a removable cover for said open top, a clock spring carried by said cover, a feed screw having a cylindrical portion rotatably connected with said cap, having an intermediate screw threaded portion, and having a reduced lower end portion of polygonal cross sections, said spring means being associated with said cap and screw, an ejecting plunger on the screw threaded portion of the screw, and a screw threaded plug fitted into said neck and provided with an oil discharge port and a socket receiving the polygonal reduced end portion of said screw.

4. In a structure of the class described, an open top cup, a removable closure for the open top, spring means carried by said closure, a shaft rotatably connected with said closure, said spring means being connected with said shaft, a winding device cooperable with said shaft, said shaft being provided with an internal intermediate screw threaded portion, an ejecting plunger threaded upon said portion, and a flow control device at the bottom of the cup operated by said screw for regulating the discharge of lubricant from the cup.

In testimony whereof I affix my signature.

GEORGE F. HERBST.