Feb. 23, 1926. 1,574,485

J. HYLARD

LIFE SAVING APPARATUS FOR USE AT SEA

Filed May 9, 1925

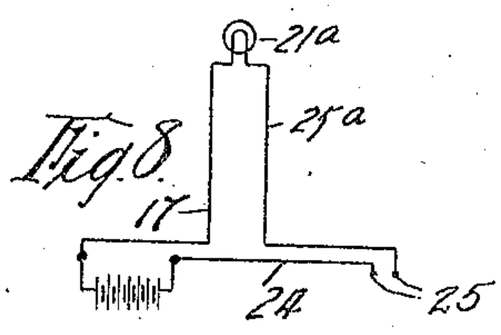

Fig. 8.

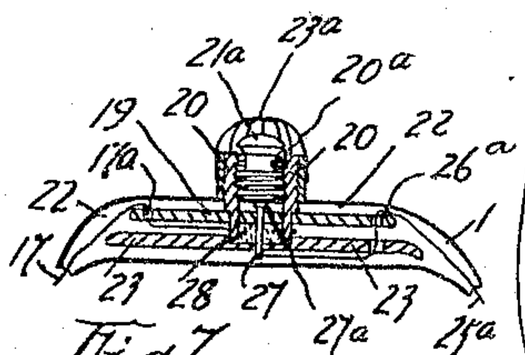

Fig. 7.

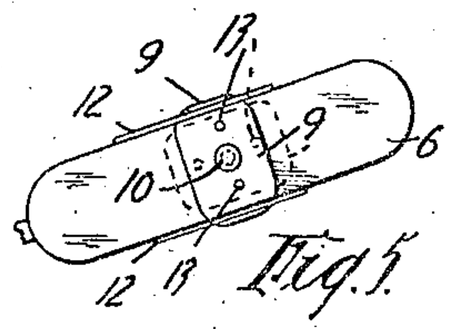

Fig. 5.

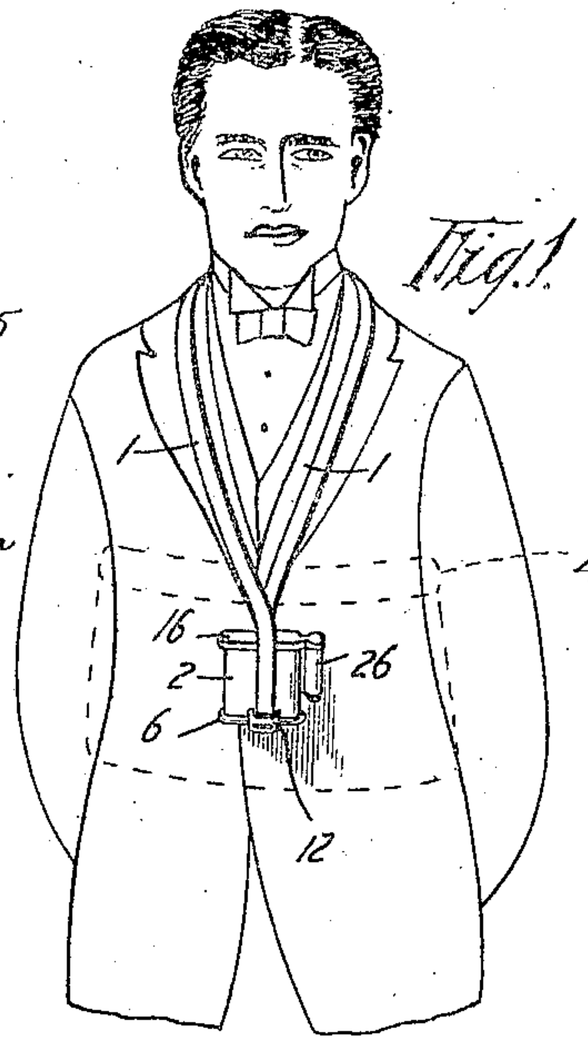

Fig. 1.

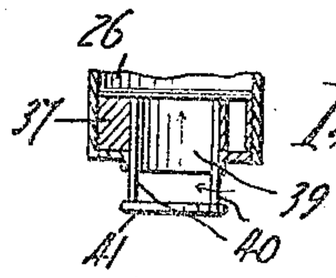

Fig. 6.

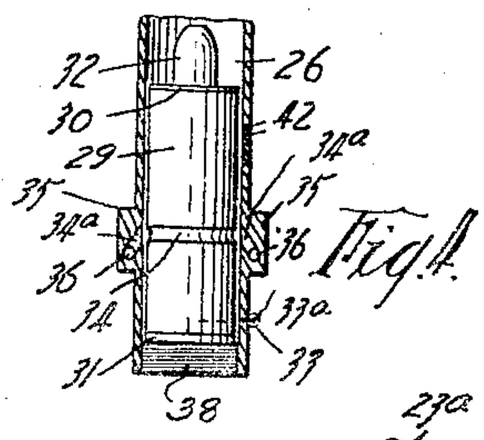

Fig. 4.

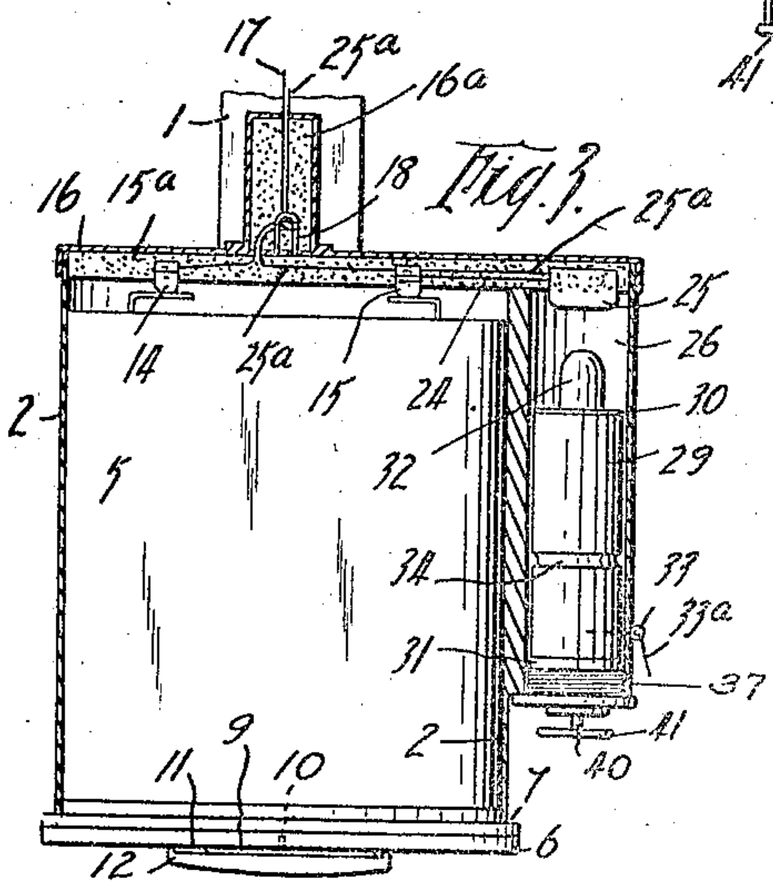

Fig. 3.

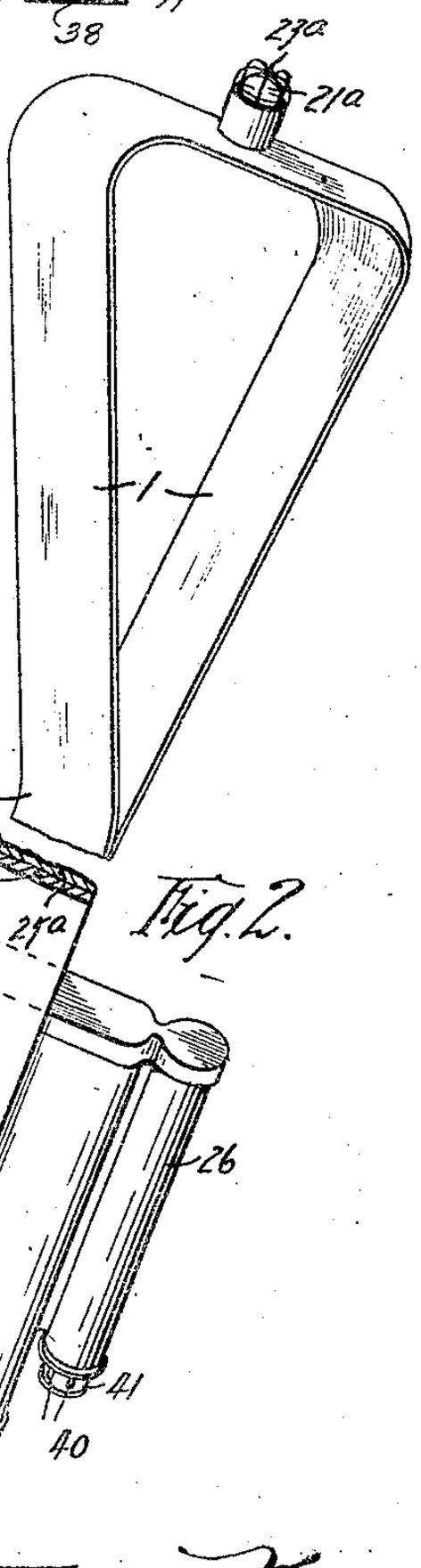

Fig. 2.

Inventor
Jobse Hylard
by Wright Brown Quinby & May
Attys.

Patented Feb. 23, 1926. 1,574,485

UNITED STATES PATENT OFFICE.

JOHN HYLARD, OF ST. KILDA, VICTORIA, AUSTRALIA.

LIFE-SAVING APPARATUS FOR USE AT SEA.

Application filed May 9, 1925. Serial No. 29,050.

To all whom it may concern:

Be it known that JOHN HYLARD, subject of the King of Great Britain, residing at 24 Clyde Street, St. Kilda, in the State of Victoria, Commonwealth of Australia, has invented certain new and useful Improvements in and Relating to Life-Saving Apparatus for Use at Sea, of which the following is a specification.

This invention relates to life-saving apparatus for use at sea to indicate at night the position of a person in the water.

My invention provides means whereby an individual floating in water may carry or support a light of sufficient brilliancy to at once indicate his or her position.

An object of the invention is to provide means to enable the apparatus to be made ready for operation by a simple manipulation of the hand, so that when the person enters the water the apparatus will produce an effective illumination above the water line.

A further object of the invention is to provide apparatus which is simple in construction, easy to manipulate, may be manufactured and installed at a low cost, and is so durable that its life is considerable under the usual and all conditions at sea.

In order that my invention may be the more easily understood, reference will be made to the accompanying sheet of drawings in which—

Figure 1 illustrates the container, the float guide, and the strap or band, hereinafter described, in position on a wearer.

Figure 2 is an enlarged view showing the container, the guide, the strap or band, and the lamp, hereinafter referred to, a portion of the strap being broken away.

Figure 3 is a sectional view of the container and guide.

Figure 4 is a sectional view showing only the guide and a float therein.

Figure 5 shows the bottom of the container and illustrates the locking means for a removable lid disposed thereat.

Figure 6 shows in section a portion of the float guide.

Figure 7 illustrates in section on a larger scale, means for fixing the lamp to the strap or band.

Figure 8 is a diagram of the wiring hereinafter referred to.

In the accompanying drawings, 1 is a tubular strap or band of suitable material, preferably strong canvas, adjusted to form a loop adapted to bear on the neck and body of a wearer as shown by Figure 1. The strap is preferably composed of two members or layers as indicated by Figure 2. The ends of the strap or band are fastened to each side of a container 2, preferably by a pin 3, which passes through lugs 4 projecting from the sides of the container, which is constructed of suitable metal. In the container is disposed a battery 5 maintained in its inserted position and protected against water by a removable lid 6 having a recess 7 at its edge holding a suitable packing contacting with the lower edge of the container 2. I provide locking means for the lid 6 comprising a plate 9 (Figure 5) which when turned on pin 10 engages longitudinal slots 11 in vertical plates 12 integral with the lugs 4 and projecting below the lower edge of the lid 6. The plate 9 may be turned by a key (not shown) having pins which are inserted in the holes 13 of the plate 9.

The source of light is preferably at the midlength portion of the band or strap and at the rear of the wearer's neck. Electrical energy is preferred as the means of illumination, and is obtained from the battery 5 disposed within the container 2 and conducted from the contacts 14 and 15 disposed in a suitable insulating material, such as an insulating cement 15ª placed at the top of the container 2 and held by the lid 16 secured thereto, said contacts cooperating with contacts projecting from the battery as shown by Figure 3. The current flows from the contact 14 along the wiring 17 which is passed through the holding staple 18 fixed to the top of the lid 16 and enclosed in insulating cement 16ª, thence along a member of the strap 1. At this point both members are connected in any suitable manner, preferably by stitching thread. Upon reaching the end of the strap, the wire 17 is led through one member thereof, and upon reaching the midlength portion, the wire is passed through a hole 17ª in a plate 19 (Figure 7), after which it is turned around and connected to the circular contact 20 or socket cooperating with the contact 20ª of the lamp 21ª. The contact 20 is supported by and fixed to the plate 19, which is disposed within a chamber 22 provided in the strap 1 between the midlength portions of the members there-

of. To add to the rigidity of the strap at this point, an internal stiffening plate 23 of leather or other suitable material is disposed in the chamber 22. The lamp 21ª is provided with a wire or other suitable guard 23ª. From the contact 15, the wiring 24 is led to one of the parallel contacts 25 disposed within a suitable insulating cement at the top of a float guide 26 integral with or fixed to the container 2. From the adjacent contact 25, the wire 25ª is led through the insulating cement 15ª and is also passed through the holding staple 18, from which it is carried up through into the other member of the strap 1, thence along through said member to the midlength portion where it is passed through the hole 26ª of the plate 19 and also through the stiffening plate 23, the wire being finally connected to the contact 27 embedded in the insulating cement 28 at the bottom of the circular contact 20, the contact 27 cooperating with the contact 27ª.

The circuit formed by the described connections is closed and broken by an automatic switch, comprising a float 29 disposed within the guide 26, and resting under normal conditions upon the top of a screw plug hereinafter described. The float 29 has strengthening plates or heads 30 and 31 at its ends. The plate 30 is provided with a connecting contact 32 which when the float 29 rises passes between and strikes the spaced apart contacts 25.

The float 29 may be fastened in its lowest or circuit breaking position by a pin 33 which passes through an orifice in the guide 26, and enters an orifice in the float 29 and may be provided with a pull cord 33ª. In lieu of such pin, a circumferential groove 34 may be made in the float (Figure 4) and at each side of the guide 26 inclined tubes 34ª may be provided in the integral blocks 35. In each tube 34ª may be disposed a ball 36 of metal or other suitable material. When the container 1 and with it the guide 26 are turned upside down, the balls will run along the tubes 34ª and engage the groove 34, and by doing so hold the float 29 preventing contact being made between 32 and 25.

The lower end of the guide 26 is closed by a screw plug 37 (Figure 3) engaging the internal thread 38 (Figure 4) at the bottom of the guide 26, and provided with a central opening 39 in which is disposed two vertical arms 40 supporting a flat circular plate 41 forming a guard to prevent the fingers or material being inserted through the opening to operate the float 29 after unauthorized removal of the pin 33.

I provide air-releasing means embodied in holes (Figure 4) of suitable dimensions made in the wall of the guide 26 between the upper and lower ends thereof. Said holes allow the escape of air when the float 29 rises, and are positioned to allow sufficient space between them, and the contacts 25 to ensure an air lock to keep the water from meeting the contacts 25, the upper portion of the guide being closed against the escape of air.

When the apparatus is not in use, the closing of the holes 42 by the accumulation of matter may be prevented by a paper or the like seal (not shown), which may be cemented to the sides of the container and guide and easily removed when necessary. When the container and other parts of the apparatus are not in use, they may be enclosed in a suitable or light envelope or envelopes to prevent deterioration.

In operation, the strap or band 1 is placed around the neck, the container 2 resting against the front of the wearer's body, and is preferably within the life belt 43 shown by dotted lines in Figure 1. After placing the strap or band in position, the next step is to pull the pin 33 out of engagement with the float 29. When the wearer enters the water, the latter passes through the opening 39 of the screw plug 37 as indicated by the arrows (Figure 6) and forces the now free float 29 upwardly, simultaneously forcing the excess air within the guide 26 through the holes 42. As the float reaches its limit of upward movement, the connecting contact 32 makes contact with the spaced apart contacts 25, closing the circuit, the current passing from the battery 5 through the described circuit connections. The lamp may now show a continuous light for a lengthy period. Should the water be rough and the wearer be tossed about, the container may rise briefly out of the water, allowing the float to drop and break the circuit; but when the container and guide again enter the water, the circuit is closed, so that an intermittent light is provided. The frequency of illumination will, however, be sufficient to indicate the whereabouts of the person in the water under all conditions at sea and enable a prompt rescue to be effected.

It is to be understood that all metal parts which come into contact with the water are to consist of a metal of non-corrosive nature.

It is obvious that the container 2 may, in lieu of being carried by the strap or band 1, be carried by or attached to any type of life-buoy or life belt and the like. In any case, the arrangement must be such that the open end of the float guide faces downward and is submerged when the apparatus is in use.

I claim:

1. Life-saving apparatus comprising a water-tight container, a float guide fixed thereto and open at one end for the admission of water, means for supporting the

container in water with the open end of the float guide facing downward and submerged, a source of electrical energy in the container, an electric lamp outside the container, a float normally depressed in the guide and adapted to be raised by water entering the open end thereof, and circuit connections between the source of energy and the lamp, including a switch which breaks the circuit when the float is depressed, and closes the circuit when the float is raised.

2. Life-saving apparatus as specified by claim 1, the float guide being provided with air-releasing means between its upper and lower ends and closed against the release of air above said means, the arrangement being such that, when the float is raised to close the switch, an air lock surrounds the switch and prevents contact of water therewith.

3. Life-saving apparatus as specified by claim 1, said switch including spaced contacts in the upper portion of the float guide, and a connecting contact carried by the float.

4. Life-saving apparatus as specified by claim 1, comprising detent means releasably securing the float in its circuit-breaking position.

5. Life-saving apparatus as specified by claim 1, comprising a pin detent removably inserted in orifices formed in the guide and in the float, the arrangement being such that the pin when inserted secures the float in its circuit-breaking position.

6. Life-saving apparatus as specified by claim 1, the container-supporting means including a pliable looped strap fixed at its ends to the container and adapted to bear on the neck and body of a wearer, the arrangement being such that when the wearer is supported in water by a buoyant life belt, the open end of the float guide is submerged, the electric lamp being fixed to the midlength portion of the strap, and the circuit connections including wires secured to and extending lengthwise of the strap.

7. Life-saving apparatus as specified by claim 1, the container and float guide being provided with insulating material enclosing portions of conducting wires constituting elements of said circuit connections.

8. Life-saving apparatus as specified by claim 1, the container comprising a body portion provided with an end opening for the reception of the source of electrical energy, and with slotted plates projecting from said opening, and a water-tight lid closing the opening and provided with a pivoted semi-rotatable plate adapted to engage the slots in said slotted plates.

9. Life-saving apparatus as specified by claim 1, the container-supporting means including a pliable looped strap fixed at its ends to the container and adapted to bear on the neck and body of a wearer, the electric lamp being fixed to the midlength portion of the strap, the circuit connections including wires secured to and extending lengthwise of the strap, the said midlength portion being provided with a chamber, a holding plate in the chamber, having lead in holes for said wires, and a stiffening plate of pliable material in the chamber beside the holding plate.

10. Life-saving apparatus as specified by claim 1, the container being provided at one end with insulating material and with electrical contact points held by said material and arranged to cooperate with contact points on a source of electrical energy inserted in the container, the circuit connections including wires extending through the insulating material.

In testimony whereof I have signed my name to this specification.

JOHN HYLARD.