Sept. 1, 1925. 1,551,908

T. C. PROUTY

CONTROLLING APPARATUS FOR DELIVERING OXYGEN

Filed April 9, 1919 5 Sheets-Sheet 1

Fig. 2.

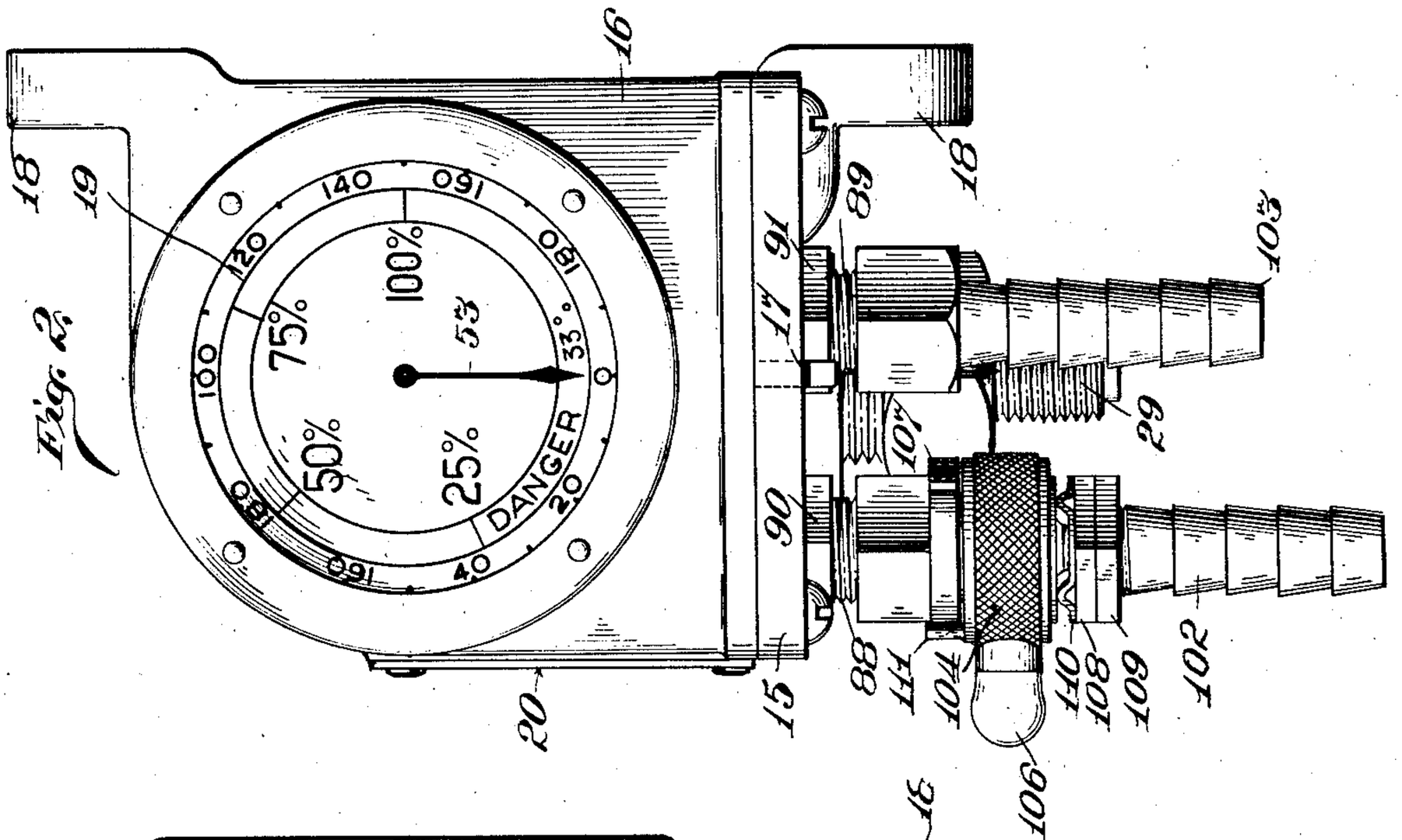

Witness
Milton Lenoir

Inventor
Theodore C. Prouty,
Atkinson Jamieson
Attorneys.

Sept. 1, 1925. 1,551,908

T. C. PROUTY

CONTROLLING APPARATUS FOR DELIVERING OXYGEN

Filed April 9, 1919 5 Sheets-Sheet 2

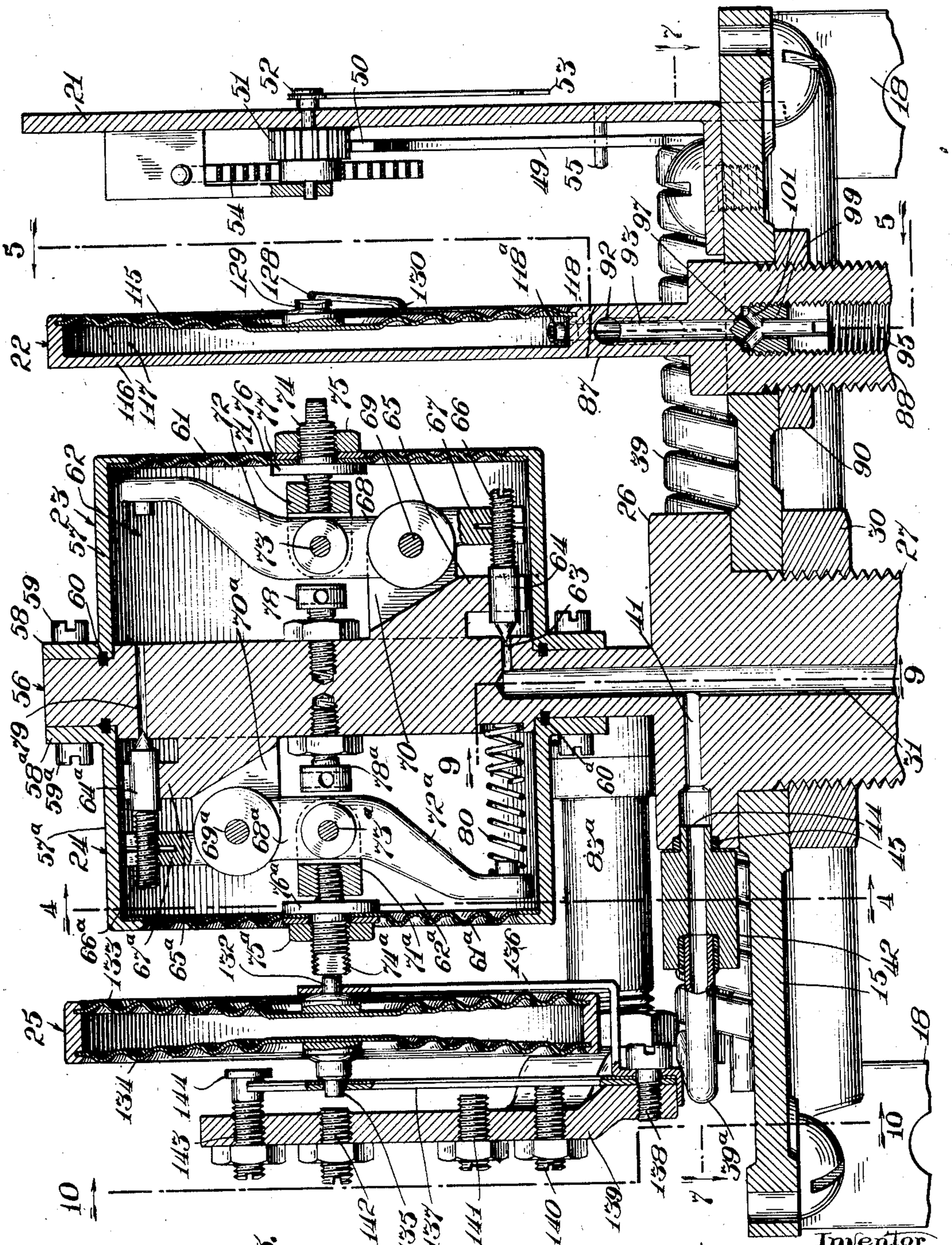

Fig. 3.

Witness
Milton Lenoir

Inventor
Theodore C. Prouty,
by Adams & Jaenson.
Attorneys.

Sept. 1, 1925. 1,551,908

T. C. PROUTY

CONTROLLING APPARATUS FOR DELIVERING OXYGEN

Filed April 9, 1919 5 Sheets-Sheet 3

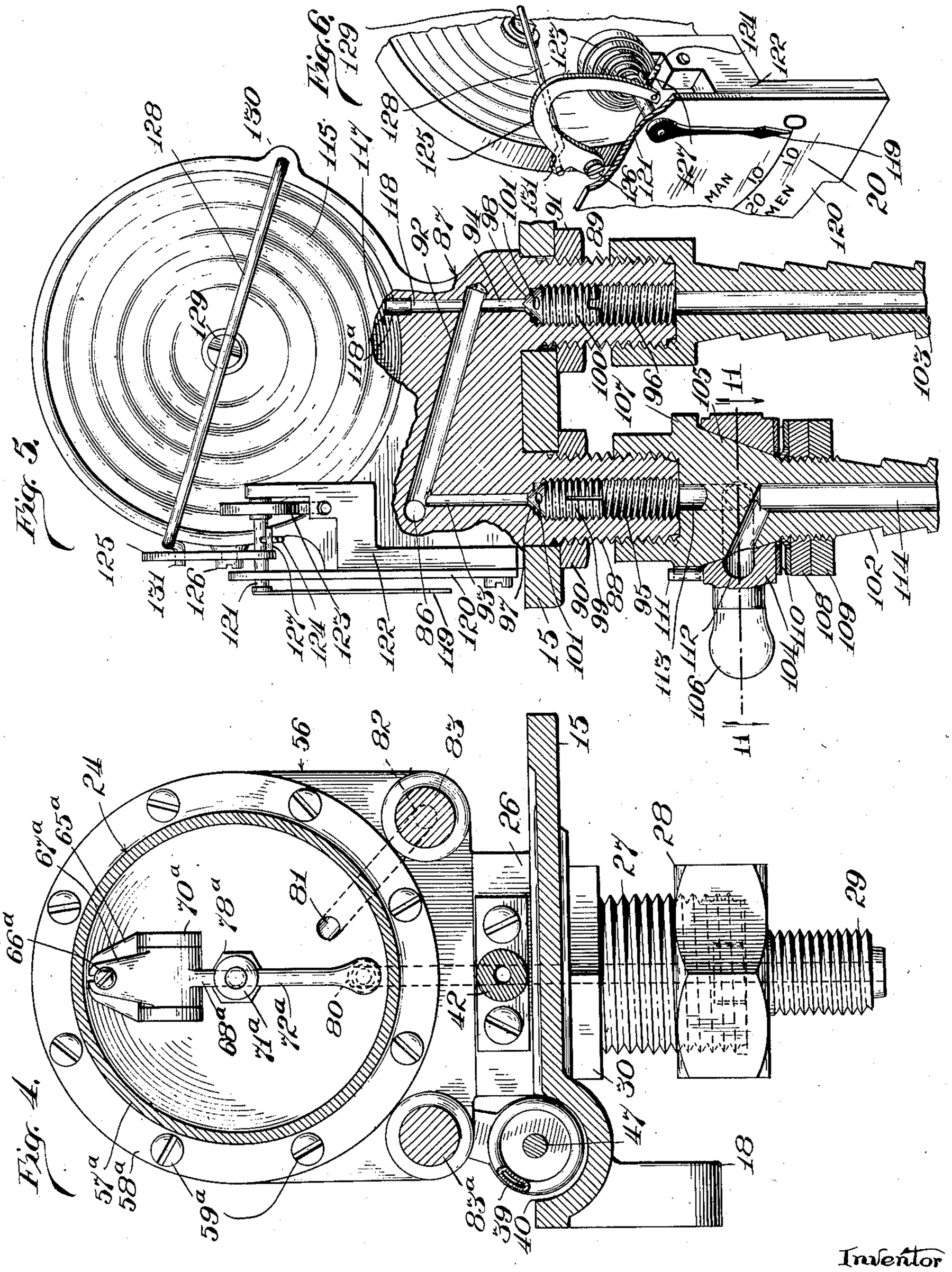
MAN
10
20
10
MEN
20
10
0
0
0

Sept. 1, 1925. 1,551,908

T. C. PROUTY

CONTROLLING APPARATUS FOR DELIVERING OXYGEN

Filed April 9, 1919 5 Sheets-Sheet 4

Fig. 7.

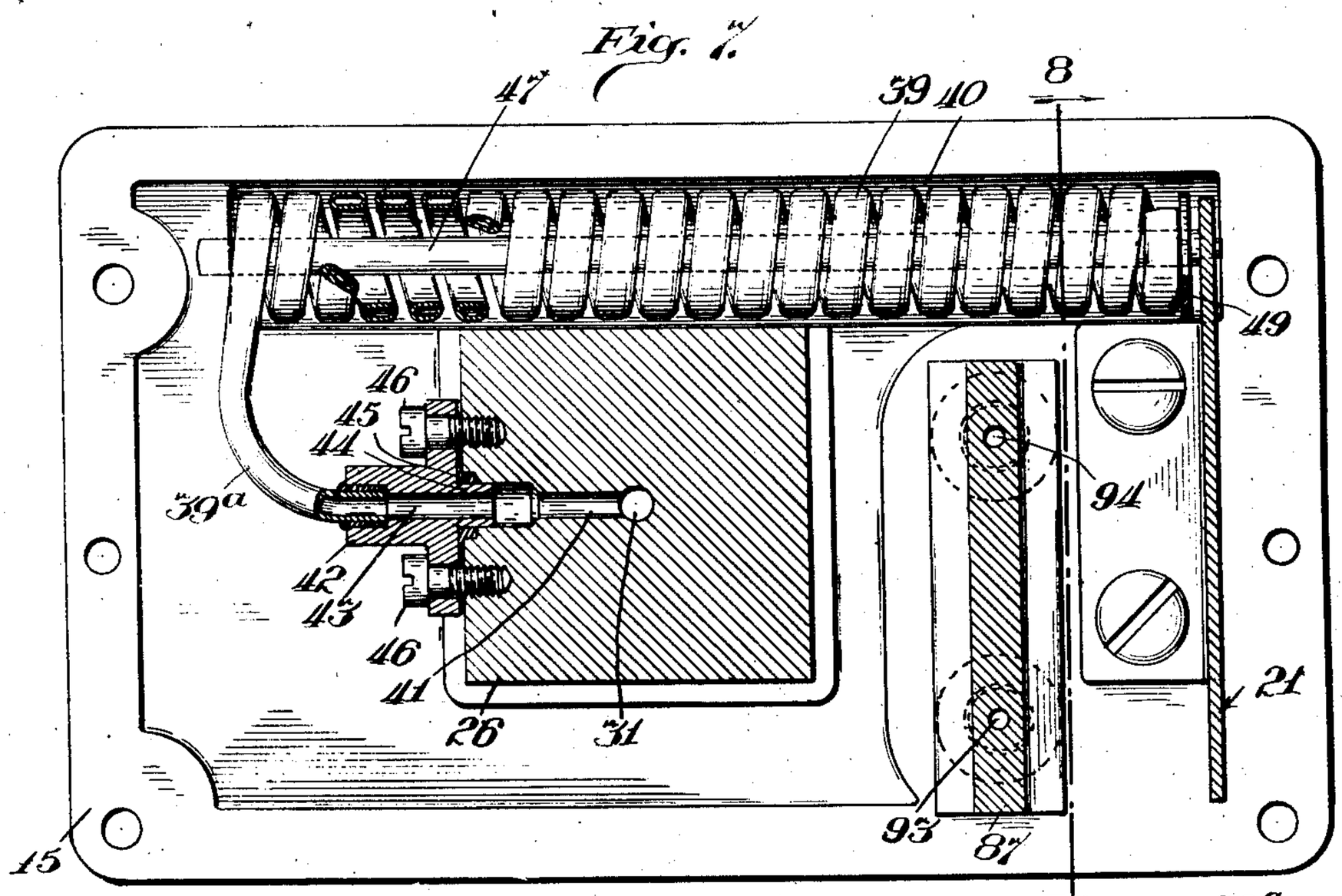

Fig. 8.

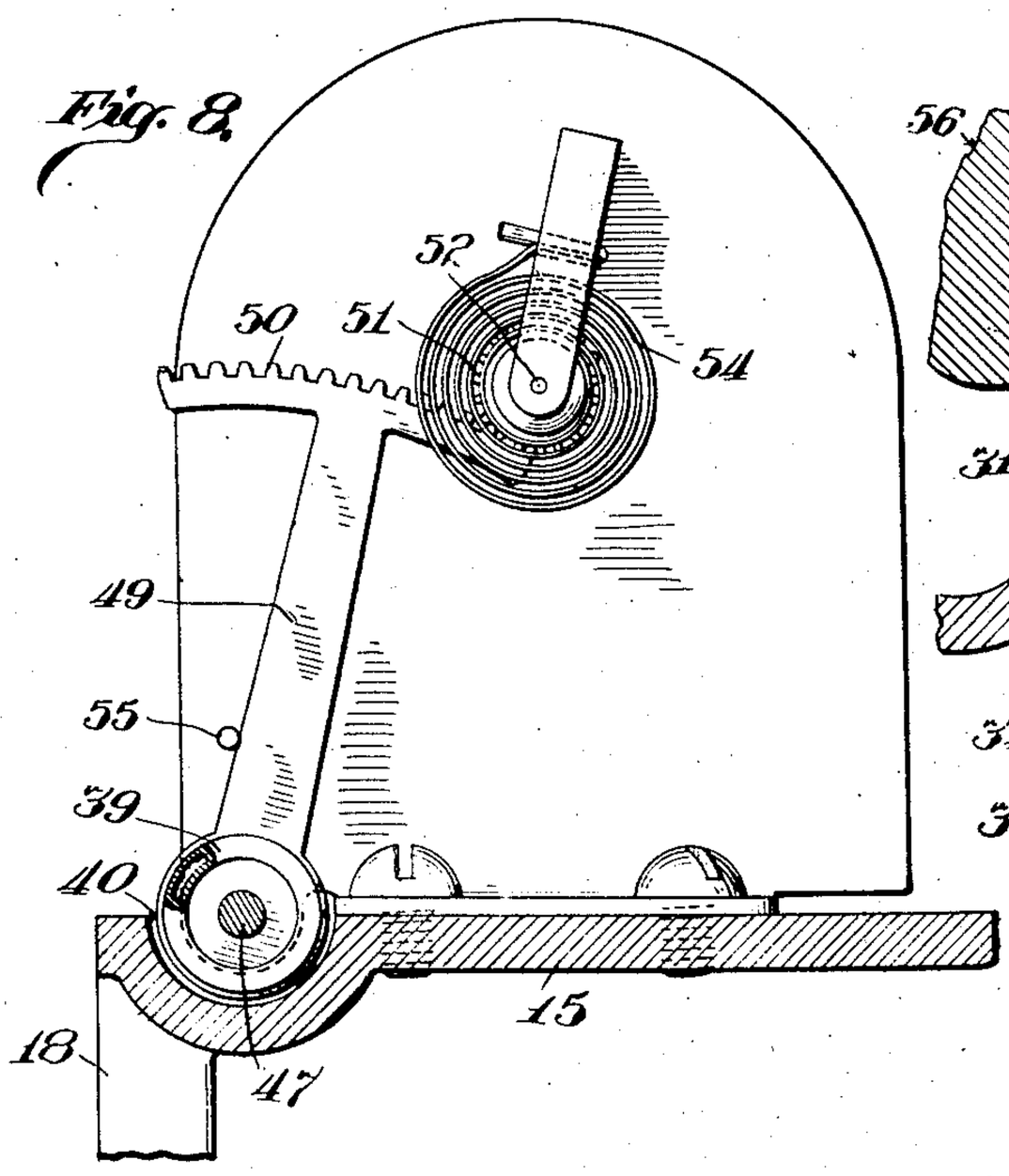

Fig. 9.

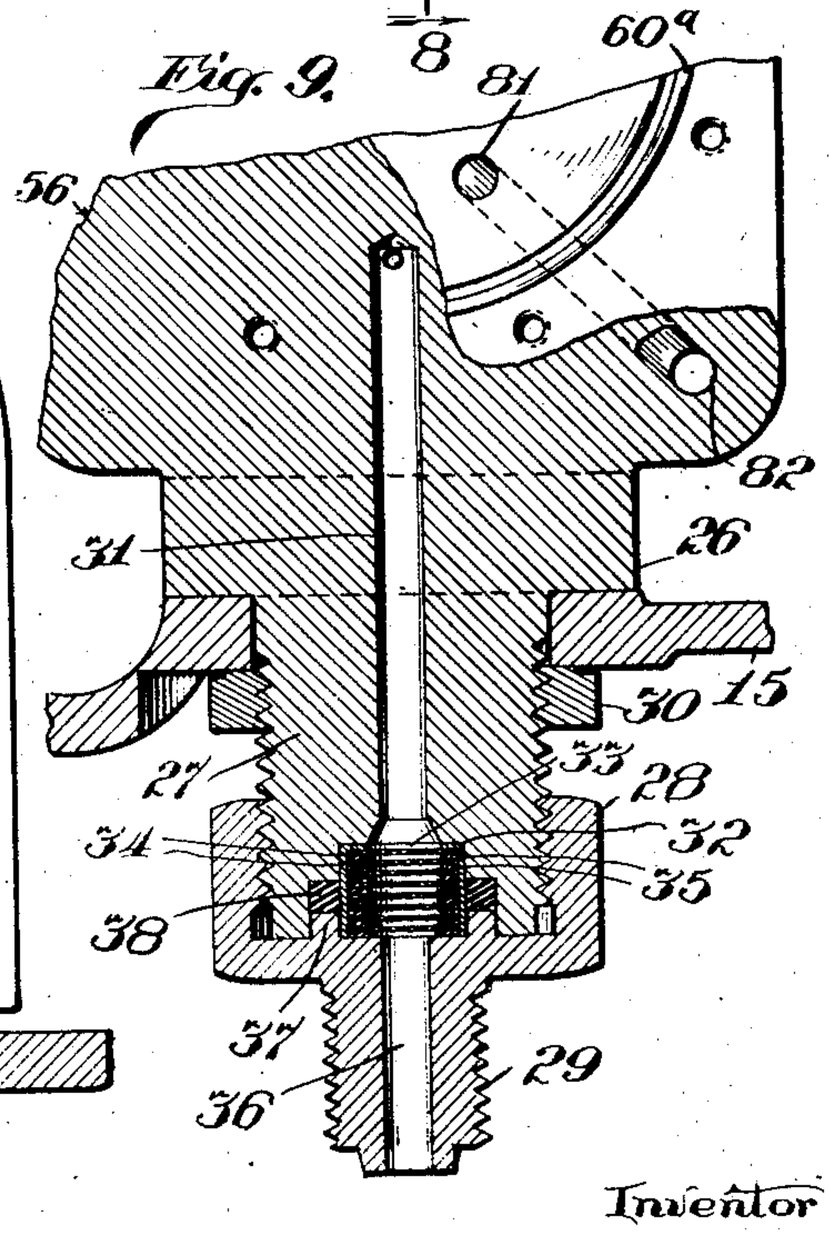

Witness
Milton Lenoir

Inventor
Theodore C. Prouty,
By Adams & Jamison.
Attorneys.

Sept. 1, 1925. 1,551,908

T. C. PROUTY

CONTROLLING APPARATUS FOR DELIVERING OXYGEN

Filed April 9, 1919 5 Sheets-Sheet 5

Fig. 10.

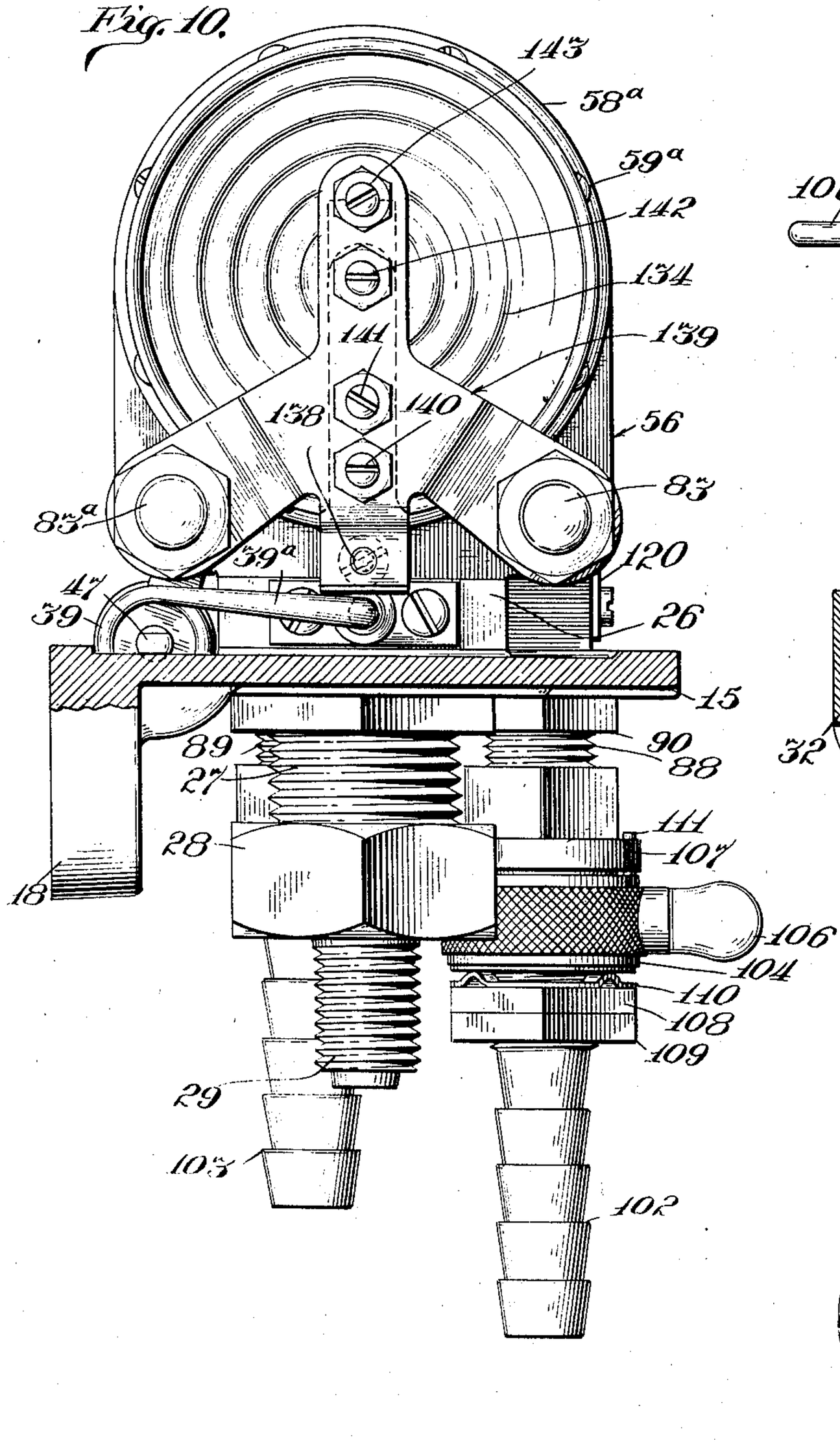

Fig. 11.

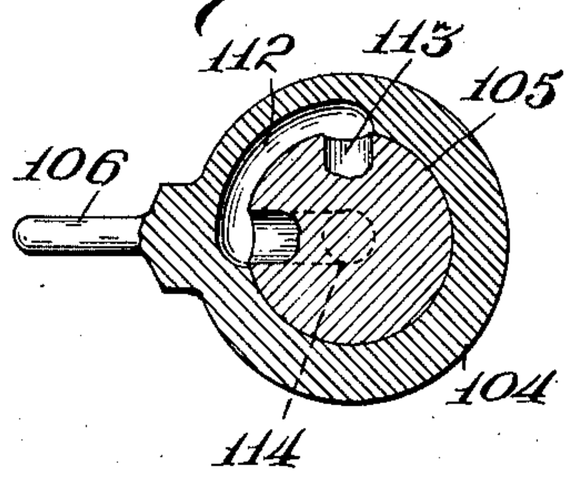

Fig. 12.

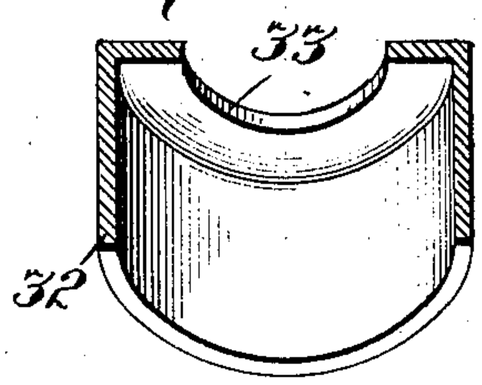

Fig. 13.

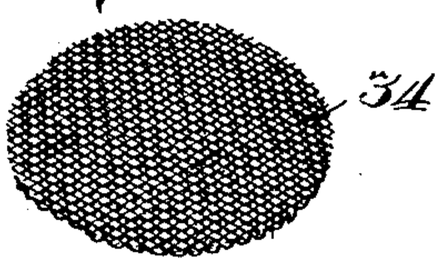

Fig. 14.

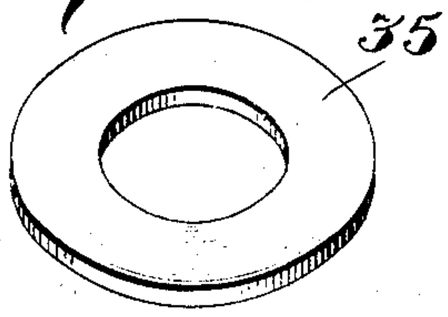

Witness:
Milton Lemer

Inventor
Theodore C. Prouty,
By Adams & Lawson.
Attorneys.

Patented Sept. 1, 1925. 1,551,908

UNITED STATES PATENT OFFICE.

THEODORE C. PROUTY, OF ELGIN, ILLINOIS, ASSIGNOR, BY MESNE ASSIGNMENTS, TO PATENTS HOLDING CORPORATION, OF CHICAGO, ILLINOIS, A CORPORATION OF DELAWARE.

CONTROLLING APPARATUS FOR DELIVERING OXYGEN.

Application filed April 9, 1919. Serial No. 288,721.

To all whom it may concern:

Be it known that I, THEODORE C. PROUTY, a citizen of the United States, and a resident of Elgin, in the county of Kane and State of Illinois, have invented certain new and useful Improvements in Controlling Apparatus for Delivering Oxygen, of which the following is a specification, reference being had to the accompanying drawings.

My invention relates to apparatus for delivering oxygen to aviators, and has more particularly to do with apparatus of the type shown in my pending application for patent, Serial No. 244,513, filed July 11, 1918, in which the proper proportion of gas required at different altitudes is supplied to the aviator's mask through an orifice of constant area by automatically varying the delivery pressure which controls its discharge. Oxygen gas for aviators' use is ordinarily stored in a tank under a maximum pressure of about 150 atmospheres and must be delivered to the aviator's mask under greatly reduced pressure which will be only sufficient to supply him with the volume of gas required at different altitudes to enable him to breathe normally, and in the apparatus of my said pending application this is accomplished by the use of two valves, the first being a high pressure valve having a chamber which receives gas from the storage tank, the high pressure valve being normally open and being automatically closed when the pressure in its chamber reaches a predetermined point, say fifty pounds to the square inch. The second is a low pressure valve having a valve chamber which receives oxygen from the high pressure chamber and delivers it to the aviator's mask, this second valve being normally closed against the admission of oxygen thereto from the high pressure chamber and being adapted to function under very slight variation of the differential static pressure, according to altitude. By differential static pressure I mean the difference between the pressure inside and that outside the low pressure valve chamber. In connection with the low pressure valve barometrically controlled differentially acting mechanism is provided which controls the action of the low pressure valve according to variations in altitude in such manner that the proper volume of oxygen is supplied to the aviator at all times.

The object of my present invention is to provide certain improvements in apparatus of this type to meet the exacting conditions encountered in providing an apparatus suitable for aviation use. Such an apparatus must be wholly automatic in its operation, as it is a well established fact that aviators are not ordinarily conscious of a deficiency in the oxygen supply; it must be capable of operating properly under variations of pressure in the storage tank ranging say from 7 to 150 atmospheres; and it must be very light in weight, small and compact, and not subject to material variation under varying conditions of temperature, position, and vibration. It is also highly desirable that it be normally inoperative at altitudes ranging from sea level to approximately 3000 feet or whatever other altitude may be chosen as the critical altitude, i. e., that at which the delivery of oxygen starts, and be automatically brought into operation when such critical altitude is attained, continuing thereafter to deliver the proper proportion of oxygen required at different altitudes; and also that it be capable of supplying oxygen to more than one aviator. Furthermore, it should be provided with proper gauges to indicate the pressure in the storage tank, and the volume of gas being supplied to either one or two aviators. All these requirements are met in the apparatus which forms the subject-matter of this application, as will appear from the following description of the embodiment of my invention illustrated in the accompanying drawings.

In the drawings,—

Fig. 1 is a side elevation of my improved apparatus, part of the case being broken away;

Fig. 2 is an end elevation, which, among other things, shows the pressure gauge which is connected with the storage tank;

Fig. 3 is substantially a central longitudinal vertical section;

Fig. 4 is a vertical cross-section on line 4—4 of Fig. 3;

Fig. 5 is a view partly in elevation and partly in section on line 5—5 of Fig. 3, illustrating more particularly the devices

which operate the oxygen delivery gauge, or "flow meter";

Fig. 6 is a partial perspective view of the same;

Fig. 7 is a horizontal section on line 7—7 of Fig. 3, showing part of the high pressure gauge mechanism and its connections;

Fig. 8 is a partial vertical cross-section on line 8—8 of Fig. 7 illustrating part of the high pressure gauge mechanism;

Fig. 9 is an enlarged partial vertical cross-section on line 9—9 of Fig. 3;

Fig. 10 is an end view, partly in section, viewed on line 10—10 of Fig. 3;

Fig. 11 is a horizontal section of a shut-off valve by which one of the delivery passages may be shut off by the operator, this section being taken on line 11—11 of Fig. 5; and

Figs. 12, 13 and 14 are views of the parts going to make up the strainer through which oxygen supplied to the apparatus is filtered.

15 indicates the base-plate of the apparatus and 16 a case or housing which fits upon the base plate and is secured thereto by screws or other suitable means. Preferably it is provided with one or more dowel pins 17 which pass through the base-plate and are perforated to receive an ordinary wire seal to prevent tampering with the mechanism by unauthorized parties. The base-plate and case may be provided with lugs 18 by which the apparatus may be mounted upon any suitable support, as shown in Figs. 1 and 2. As shown in Fig. 2, at one end of the case 16 is a glazed opening to expose to view a high pressure gauge 19 connected with the storage tank so that it indicates the pressure therein, and shows when such pressure falls to the danger point, i. e., the point where the supply of oxygen left in the tank is nearing exhaustion. Also at one side of the case there is a glazed opening to expose to view an oxygen delivery gauge 20, which may conveniently be termed a flow meter, shown in Fig. 1, which shows the volume of gas being supplied to either one man or two men. The devices by which these two gauges are operated will be hereinafter described.

Referring to Fig. 3 in which the several operating parts of the apparatus are shown in their assembled relation on the base-plate,—21 indicates the dial plate of the high pressure gauge 19, 22 indicates a pressure chamber which controls the operation of the flow indicator, 64 indicates the high pressure valve, 24 indicates the low pressure valve, and 25 indicates an aneroid which forms a part of the controlling mechanism which regulates the operation of the low pressure valve. The oxygen coming from the storage tank (not shown) is admitted directly to the high pressure gauge mechanism and also to the high pressure valve 23, but I shall describe first the construction and connections of the high pressure gauge. 26 indicates a block which rests upon the base-plate 15 and is provided with a screw-threaded nipple 27 which projects downward through the base-plate for attachment thereto of an adapter or coupling 28 having a smaller nipple 29 which is connected in any suitable way with the supply pipe leading from the storage tank. A nut 30 is screwed upon the nipple 27 into engagement with the under side of the base-plate 15 for securing the block 26 in place. 31 indicates a longitudinal passage extending through the nipple 27 and block 26, which passage communicates at its lower end with a recess in the lower end of the nipple 27 in which is fitted a strainer. The construction of this strainer is best shown in Figs. 9 and 12 to 14. It comprises a cup 32 which fits in the above-mentioned recess, its bottom having an orifice 33 which registers with the lower end of the passage 31. Fitted in said cup are a series of fine wire mesh screens 34, preferably made of phosphor bronze, and a series of washers 35 arranged between the several screens, as shown in Fig. 9, so that the cup 32 is filled with the alternating screens and washers. The adapter 28 fits over the lower end of the strainer and is provided with a longitudinal passage 36 which registers with the passage 31, and with an annular flange 37 which embraces the lower margin of the cup 32 and bears against a rubber gasket 38 fitted between the inner surface of the flange 37 and the bottom of the recess in the nipple 27 in which said gasket is fitted, as shown in Fig. 9. Thus when the adapter 28 is screwed down on the nipple 27 the gasket 38 is compressed by the flange 37, forming a tight joint. Obviously gas entering the apparatus from the storage tank is effectively strained before it reaches the passage 31.

39 indicates a flattened elastic metal tube wound into spiral form and fitted in a longitudinally extending recess 40 at one side of the base-plate 15, as shown in Fig. 7. One end of this tube is extended to approximately the center line of the base-plate, as shown at 39^a in said figure, and connects with a transverse passage 41 in the block 26 which branches from the passage 31, as shown in Figs. 3 and 7. This connection is best made by connecting the tube end 39^a with the stem of a T-shaped block 42 having a passage 43 which registers with the passage 41, as shown in Figs. 3 and 7. The block 42 is provided with a nipple 44 which fits into a recess in the outer end of the passage 41 and is surrounded by a gasket 45 so that by securing the block 42 to the block 26 by screws 46,

as shown in Fig. 7, a tight connection may be obtained. The opposite end of the coiled tube 39 is rigidly connected to a rod 47 which extends longitudinally through said tube and is mounted in suitable bearings in the base-plate so that it may turn. Said rod is secured to the stem 49 of a toothed sector 50 which meshes with a pinion 51 carried by the arbor 52 of the indicating hand 53 of the high pressure gauge 19, as shown in Figs. 3 and 8. It will be evident that the admission of gas under pressure to the coiled tube 39 will tend to uncoil it, according to the principle of the Bourdon gauge, and consequently will rotate the rod 47. The parts are so arranged that increase in pressure swings the sector 50 to the right as viewed in Fig. 8, and consequently through the pinion 51 rotates the hand 53 around the face of the dial. A coiled spring 54 connected with the pivot 52 tends to move the hand in the opposite direction and also acts as a balance spring. 55 indicates a stop for limiting the movement of the sector 50 to the left from its normal position shown in Fig. 8. It will be understood from the foregoing description that the high pressure gauge 19 is directly affected by the pressure in the storage tank and always shows the pressure therein.

Coming now to the construction of the high pressure valve 23,—56 indicates a supporting plate which is disposed transversely of the base-plate 15 and is preferably integral with the block 26, as shown in Fig. 3. 57 indicates a cylindrical member whch forms the body portion of the high pressure valve 23 and is secured at the right hand side of the plate 56 as viewed in Fig. 3 so as to form an air tight connection. Preferably this is accomplished by providing the member 57 with a marginal flange 58 which bears against one side of said plate and is secured thereto by screws 59. A lead gasket 60 is fitted in suitable grooves in the abutting members as shown. 61 indicates a corrugated diaphragm which closes the outer end of the member 57, thus forming a closed valve chamber 62. As shown in said figure, the passage 31 which leads to the storage tank is extended up into the lower portion of the plate 56, its inner end being connected by a port 63 with the valve chamber 62. Thus when the port 63 is open oxygen from the storage tank will be admitted to the said valve chamber. The port 63 is controlled by a needle valve 64 movable endwise in a bearing formed in a lug 65 connected with the plate 56 and preferably integral therewith. This needle valve is provided with a screw-threaded stem 66 which is fitted in one arm 67 of a lever 68 which is mounted upon a fulcrum 69 in the valve chamber 62. Lugs 70, preferably formed integral with the plate 56, support the fulcrum 69. 71 indicates a yoke which is connected to the opposite arm 72 of the lever 68 by a pivot 73, and is also connected with the diaphragm 61 by a connecting screw 74 one end of which is screwed into a threaded socket in the yoke 71 while its opposite end projects through a hole in the diaphragm 61 and is secured thereto by a nut 75. The screw 74 is provided with a collar 76 which bears against the inner surface of the diaphragm so that the diaphragm is clamped between said collar and the nut 75. Preferably a washer 77 is interposed between the nut 75 and the diaphragm, as shown in Fig. 3. It will be apparent that deflection of the diaphragm 61 in either direction will rock the lever 68 and consequently will operate the needle valve 64. These parts are so adjusted that the needle valve 64 is normally off its seat in the port 63 so that said port is normally open for the admission of oxygen from the storage tank to the valve chamber 62. When, however, the pressure in said valve chamber reaches a predetermined point, say fifty pounds to the square inch, the diaphragm is deflected outwardly, thereby moving the needle valve down on its seat and preventing further admission of oxygen. When the pressure in the valve chamber drops below fifty pounds the diaphragm 61 will move in the opposite direction and again open said port. 78 indicates an adjustable stop mounted on the plate 56 for limiting the inward movement of the arm 72 of the lever 68.

The low pressure valve is of similar construction, its several parts being substantially duplicates of those of the high pressure valve, and they are, therefore, indicated by corresponding reference numerals with the addition of the exponent "a." The needle valve 64^a of the low pressure valve operates in connection with a port 79 which leads from the high pressure valve chamber 62 to the low pressure valve chamber 62^a, as shown in Fig. 3, and this needle valve is normally seated, instead of being normally off its seat as in the case of the needle valve 64. A coiled spring 80 which bears against the arm 72^a of the lever 68^a tends to hold said valve seated, as shown at the left in Fig. 3. The diaphragm 61^a of the low pressure valve is similar to the diaphragm 61, but is much lighter so as to be responsive to much lower pressures, and the operating parts of the low pressure valve are so adjusted that the needle valve 64^a will be held closed under a compression approximately equal to a pressure of one ounce per square inch applied to the diaphragm 61^a. It follows that pressure in an inward direction upon the diaphragm 61^a exceeding one ounce per square inch will rock the lever 68^a in a counterclockwise direction as

viewed in Fig. 3 and open the admission port 79, thereby admitting oxygen from the high pressure chamber 62 to the low pressure chamber 62ª. As soon as the pressure in the latter chamber neutralizes the opposing deflecting forces applied to the diaphragm 61ª the needle valve 64ª will be moved to its operative position, thereby closing said port.

The oxygen admitted to the low pressure chamber 62ª passes out to the aviator's mask through a passage 81, shown in Fig. 4, which leads to a longitudinally-extending passage 82 in a pillar 83 secured to the plate 56 and extending therethrough (see Fig. 1). That part of the pillar 83 which projects beyond the right hand side of the plate 56 is screw-threaded to receive a coupling 84 for making connection with a pipe 85 which connects with a passage 86 in a block 87, as shown in Fig. 5. This block rests upon the base-plate 15 and is provided with two threaded nipples 88—89 which extend through holes in the base-plate, as shown in Fig. 5, and serve as connections for connecting the aviator's supply pipes to the oxygen controlling apparatus. 90—91 indicate nuts screwed upon the nipples 88—89, respectively, to hold the block 87 firmly in position. 92 indicates a passage in the block 87 with which connect passages 93—94 leading, respectively, to the nipples 88—89. As best shown in Fig. 5, said nipples are provided with internally threaded bores 95—96 at the inner ends of which are tapered valve seats 97—98, and valve plugs 99—100 are screwed into said bores. These valve plugs are tubular and their inner ends are conical so that they are adapted to cooperate with the tapered seats 97—98. Perforations 101 are provided in the conical portions of said blocks for the passage of gas through them. The lower end portions of the plugs 99—100 are slit longitudinally so that they may be expanded slightly to secure them in position, and they are also notched to receive a screw-driver so that they may be easily adjusted. By this construction the area of the passages through which the oxygen flows from the passages 93—94 to the aviator's supply pipes may be accurately regulated. 102—103 indicate nozzles which are screwed upon the nipples 88—89 and serve as means for attaching hose connections leading to the aviators' gas masks. The nozzle 103 is that used for a single aviator, whereas the nozzle 102 is used for supplying oxygen to a second aviator. The latter nozzle is provided with a valve so that it may be closed in case a single aviator is using the apparatus, and I prefer for this purpose to employ a valve having the construction shown in Figs. 5 and 11. As therein shown, the valve comprises a rotary collar 104 internally tapered to fit upon a tapered portion 105 of the nozzle and provided with a finger piece 106 by which it may be rotated. This valve is fitted between a fixed flange 107 on the nozzle and a collar 108 screwed upon the nozzle below the valve, and secured by a lock nut 109, preferably a spring washer 110 being interposed between the collar 108 and the valve 104. 111 indicates a pin carried by the valve which is adapted to work in a notch in the flange 107 to limit the rotary movement of the valve. 112 indicates an internal segmental groove in the valve 104 which is adapted to be moved into position to connect a passage 113 leading into the upper portion of the nozzle 105 and having a peripheral port, with a peripheral port which opens into a passage 114 extending through the lower portion of the nozzle, as shown in Figs. 5 and 11. When the valve 104 is in the position shown in Fig. 11 the passages 113—114 ore connected by the groove 112, but by partly rotating said valve they may be cut off from each other, thereby closing the nozzle 102. When the apparatus is used to supply a single aviator this valve is closed and where it serves two aviators the valve remains open.

The flow meter which indicates the rate of flow of oxygen to the nozzles 102—103 comprises the following elements: 115 indicates a corrugated flexible diaphragm which is secured to a cup-shaped plate 116 which is preferably made integral with the block 87. The diaphragm and plate together form a chamber 117 which communicates with the passage 92 through a passage 118. A small tube 118ª is preferably soldered in the passage 118 and extends into chamber 117 for the purpose of preventing dirt from dropping into and restricting the orifice at the valve seat 98. (See Figs. 3 and 5.) Thus the chamber 117 receives oxygen from the low pressure valve and the pressure in the chamber 117 tends to deflect the diaphragm 115 outwardly. 119 indicates a pointer that swings over a dial plate 120 which is marked off to indicate the supply of oxygen required for one man or two men at different altitudes, as ten, twenty or thirty thousand feet, and the position of the pointer 119 denotes in terms of altitude the volume of oxygen being delivered. This pointer is mounted upon a horizontal shaft 121 journaled in suitable supports, one of which may be a bracket 122, shown in Fig. 6, and the other the dial plate 120, and it is provided with a spring 123 which tends to hold it in its normal position opposite the zero mark and to restore it to such position. The shaft 121 also carries a cross-pin 124 through which it is actuated, as will be hereinafter described. 125 indicates a curved lever mounted upon a pivot

126 supported on the peripheral portion of the plate 116 and having an arm 127 which is adapted to overlie and bear upon the pin 124, as shown in Fig. 6. This lever is adapted to swing in a vertical plane and it is actuated by the deflection of the diaphragm 115 through the instrumentality of an arm or rod 128, as best shown in Fig. 5. The intermediate portion of this rod bears on the wedge-shaped outer end of a boss 129 secured at the center of the diaphragm 115, as shown in Fig. 3, and one end of said rod is connected with the marginal portion of the plate 116 as shown at 130 in Fig. 5. The other end of said rod is free to move and is pivotally connected with an arm 131 which projects from the lever 125 adjacent to its pivot, as shown in Fig. 6. By this construction, when the diaphragm 115 is deflected outwardly by the pressure in the chamber 117 the free end of the rod 128 is moved in the same direction, thereby rocking the lever 125 in a clockwise direction, as viewed in Fig. 6, and bearing down on the pin 124. This swings the pointer 119 in a clockwise direction over the dial plate 120, and, the parts being properly calibrated, indicates the rate of flow of oxygen to the aviator or aviators.

Coming now to the devices for automatically varying the rate of flow of oxygen in accordance with the requirements of different altitudes, it will be observed from an inspection of Fig. 3 that the head of the screw 74ª lies in close proximity to or bears against a pin 132 which projects axially from one of the diaphragms 133 of the aneroid 25, which is mounted parallel with the diaphragm 61ª and a short distance therefrom. Outward deflection of the diaphragm 133, therefore, exerts inward pressure upon the screw 74ª and consequently rocks the lever 68ª in a counterclockwise direction as viewed in Fig. 3, thereby opening the valve 64ª. It follows that the aneroid 25 acts barometrically to control the admission of oxygen to the low pressure chamber 62ª, but in order that it may act differentially to increase the volume of oxygen according to a predetermined rate as required at different altitudes additional mechanism is necessary, which will now be described.

It will be noted that, as shown in Fig. 3, the opposite diaphragm 134 of the aneroid 25 is also provided with an axial pin 135, and the aneroid is pivotally supported by the pins 132 and 135 in bearings provided by two springs 136—137, which are preferably connected together at their lower ends and are secured, preferably by a screw 138, to a vertically disposed supporting plate 139. This plate is illustrated as mounted on the pillar 83 and a corresponding pillar 83ª at the other side of the base, as shown in Figs. 1 and 4. It will be apparent that by this construction when the diaphragms 133—134 are deflected outwardly by the release of the load due to decreasing atmospheric pressure as the altitude increases, the pins 132—135 will be moved apart and at the same time the springs 136 and 137 will be moved laterally. The spring 137 is a cantalever spring which when moved to the left from the position shown in Fig. 3 bends from different points, its effective length becoming shorter as it successively comes in contact with one or another of a series of adjustable stops or screws 140—141 mounted in the plate 139 at different heights, and set at different distances from the spring 137 when it is in its normal position, the stops nearest the axis of the aneroid 125 being set farthest from the spring. In the drawings I have shown two of such stops, but any desired number may be employed. As will be readily understood, when the spring 137 bears on the stop 140 the distance from the pin 135, which represents the point of application of the power, to the stop 140 will be greater than when the spring bears upon the stop 141. When the spring 137 is moved to the left from the position shown in Fig. 3 it first bears on the stop 140, and after it has been moved far enough, it bears on the stop 141. Consequently, said spring offers less resistance to such lateral movement during the early stage of its movement than is required after it bears on the stop 141. The spring 137, therefore, acts as a differential lever which presents increasing resistance to outward deflection of the diaphragm 134 as the altitude increases, with the result that the aneroid 25 acts barometrically to exert increasing inward pressure upon the screw 74ª as the altitude increases. The spring 136 yieldingly supports the aneroid 25 so as to permit outward deflection of the diaphragm 133 and assists the spring 137 in restoring the aneroid to its normal position at low altitudes. 142 indicates an adjustable stop opposite the pin 135 for limiting the outward movement of said pin and 143 indicates a stop adjacent to the upper end of the spring 137 and provided with a head 144 which limits the movement of the spring 137 in the opposite direction. It will be understood that the several stops, as 140—141, and the spring 137 are accurately calibrated so as to change the action of the aneroid 25 from a constant to the required variable pressure depending on altitude. At sea level and up to three thousand feet there is a slight space allowed between the aneroid pin 132 and the adjusting screw 74ª so that the expansion of the aneroid which takes place up to an altitude of three thousand feet does not affect the position of the low pressure dia-

phragm 61ª, which up to this point is so positioned as to permit the low pressure valve to remain closed so that there is no passage of gas through the apparatus. When, however, the instrument reaches approximately three thousand feet above sea level the equilibrium of the low pressure diaphragm 61ª is affected by the expansion of the aneroid 25, such low pressure diaphragm being moved inwardly, thereby operating the lever 68ª to open the valve 64ª and permit the entry of gas to the low pressure chamber 62ª from the high pressure chamber 62. This gas immediately seeks an exit through the passage leading to the gas mask, which passage is calibrated so that with a differential static pressure in the low pressure chamber a certain number of liters per minute will flow through said passage; consequently as soon as this delivery obtains a surplus of gas will accumulate in the low pressure chamber exerting a pressure against the diaphragm 61ª which is transmitted through the aneroid 25 to the calibrated spring 137, overcoming the resistance of said spring which is capable of offering predetermined resistance only for that particular expansion of an aneroid, the result of the operation being that the valve 64ª closes and the further admission of oxygen from the high pressure chamber to the low pressure chamber is cut off. In the apparatus shown and described the pressure in the low pressure chamber varies from a pressure at three thousand feet of approximately one ounce per square inch, to a pressure of about eighty ounces at thirty-two thousand feet. The effect of using the aneroid and calibrated spring in connection with the low pressure valve may be likened to the regulating action of a steam engine governor. When the pressure in the low pressure chamber rises above the correct value for any given altitude the action is to throttle the supply of oxygen, which will tend to bring about a reduction in pressure, whereas if the pressure falls below the correct amount the pressure of the aneroid and spring tends to open the low pressure valve and consequently to increase the pressure in the low pressure chamber. The result is that there is an almost imperceptible series of vibratory movements of the diaphragm 61ª which gives a very constant and accurately regulated flow through the delivery passage. As in the absence of compensation the tendency of the apparatus would be to give a decreased flow of oxygen for a decrease in temperature, I provide the requisite compensation by using a bimetallic spring composed of strips of steel and copper or steel and brass welded or riveted together, or the copper may be put on by an electro-plating process. In mounting the spring the copper is placed on the side next to the aneroid. The compensating action of the bimetallic spring results from the difference in contraction of the two metals due to reduction of temperature. Copper contracting to a greater extent than steel for the same reduction in temperature causes the spring to tend to assume the form of a curve with the copper on the inside and the steel on the outside of the curve, and consequently by mounting the spring as described it tends to deflect to the right under temperature reduction. It is, however, restrained from so doing at elevations below 3000 feet by the head 144 of the stop 143 shown in Fig. 3, and at elevations above that altitude by the aneroid, and, therefore, creates an additional pressure against the valve, thereby compensating for the reduction in oxygen flow which would otherwise result from the decrease in temperature. The degree of compensation depends upon the thickness and kind of metal used in connection with the steel spring and these factors, in practice, are taken into consideration in securing the required compensation.

From the foregoing description it will be seen that I have provided a controlling apparatus which is adapted to receive oxygen from a storage tank containing the gas at very high pressure and which will operate until the pressure in the storage tank falls to a comparatively low point to deliver an accurately regulated volume of oxygen to one or more aviators, automatically varying the volume according to predetermined requirements at different altitudes so that it requires no attention from the consumer. The construction is such that the apparatus is very compact and of light weight so that it is well suited for aviators' use. It may, however, be used for various other purposes, and for delivering other gases than oxygen, and I wish it to be understood that my invention includes any and all such other uses. While my present apparatus embodies many of the generic features claimed in my said pending application, which are therefore not claimed herein, it also embodies improvements of a generic character as pointed out in the claims hereinafter made, as well as many specific features of improvement which are made the subject-matter of more specific claims.

What I claim as my invention and desire to secure by Letters Patent, is—

1. An apparatus of the class described comprising a high pressure chamber, a low pressure chamber, a port connecting said chambers, barometrically controlled valve mechanism controlling the admission of gas from said high pressure chamber to said low pressure chamber, differentially acting means for varying the operation of said controlling means at different altitudes, a

gas outlet communicating with said low pressure chamber, and a pressure controlled indicator in communication with said outlet for indicating the rate of delivery of the gas.

2. An apparatus of the class described comprising a high pressure chamber, a low pressure chamber, a port connecting said chambers, barometrically controlled valve mechanism controlling the admission of gas from said high pressure chamber to said low pressure chamber, differentially acting means for varying the operation of said controlling means at different altitudes, a gas outlet communicating with said low pressure chamber, and a pressure controlled indicator in communication with said outlet for indicating the rate of delivery of the gas with respect to the volume required at different altitudes by one and by more than one consumer.

3. An apparatus of the class described comprising means for delivering gas at a variable rate of flow depending on altitude, an outlet for the gas, and a flow meter comprising a movable indicator, a member having a pressure chamber in communication with said outlet, a flexible diaphragm, and means actuated by movement of said diaphragm for operating said indicator.

4. An apparatus of the class described comprising means for delivering gas at a variable rate of flow depending on altitude, an outlet for the gas, and a flow meter comprising a movable indicator, a member having a pressure chamber in communication with said outlet, a flexible diaphragm, a swinging lever adapted to move said indicator, and means operated by said diaphragm for actuating said lever.

5. An apparatus of the class described comprising means for delivering gas at a variable rate of flow depending on altitude, an outlet for the gas, and a flow meter comprising a movable indicator, a member having a pressure chamber in communication with said outlet, a flexible diaphragm, a swinging lever adapted to move said indicator, and a member intermediately engaged by said diaphragm and having an end portion connected with said lever at one side of the pivot thereof for swinging said lever.

6. In an apparatus of the character described, the combination with a gas inlet and pressure reducing means receiving gas from said inlet, of an elongated spiral elastic tube connected with said inlet, a dial plate, an indicator movable over said dial plate, and means connected with an end portion of said tube for actuating said indicator.

7. In an apparatus of the character described, the combination with a gas inlet and pressure reducing means receiving gas from said inlet, of an elongated spiral elastic tube connected with said inlet, a dial plate, an indicator movable over said dial plate, and a swinging arm connected with an end portion of said tube and geared to said indicator for actuating the same.

8. In an apparatus of the character described, the combination with a base-plate, pressure reducing means mounted thereon, a gas inlet communicating with said pressure reducing means, an elongated spiral elastic tube connected with said inlet and disposed longitudinally upon said base-plate, a dial plate, an indicator movable over said dial plate, and a swinging arm connected with one end portion of said tube and geared to said indicator for actuating the same.

9. In an apparatus of the character described, the combination with a base-plate, pressure reducing means mounted thereon, a gas inlet communicating with said pressure reducing means, an elongated spiral elastic tube connected with said inlet and disposed longitudinally upon said base-plate, a dial plate, an indicator movable over said dial plate, a shaft extending through said tube and connected to one end portion thereof, said shaft being journaled in said base-plate, and a swinging arm connected with said shaft and geared to said indicator for actuating the same.

10. An apparatus of the character described comprising a valve chamber having a flexible diaphragm actuated by variation of the pressure in said chamber, a port opening into said chamber, a valve controlling said port, a lever mounted in said valve chamber, one arm of said lever being positively connected with said valve, means connecting the other arm of said lever with said diaphragm, and a spring acting upon an extension of said lever and tending to move said valve to its closed position.

11. In an apparatus of the character described, the combination with an intermediate plate, of high and low pressure valve chambers at opposite sides thereof, a port connecting said valve chambers, an inlet port communicating with said high pressure chamber, valves in said valve chambers for controlling said ports, and pressure actuated means for operating said valves.

12. In an apparatus of the character described, the combination with an intermediate plate, of high and low pressure valve chambers at opposite sides thereof, said valve chambers having flexible diaphragms disposed parallel with said intermediate plate, an inlet port leading to said high pressure chamber, a port connecting said chambers, levers mounted upon said intermediate plate in said chambers, each of said levers having an arm connected with the adjacent diaphragm, and valves connected with the opposite arms of said levers, for controlling said ports respectively.

13. In an apparatus of the character de-

scribed, the combination with a base, of a plate removably mounted thereon, high and low pressure valve chambers carried by said plate at opposite sides thereof, an inlet passage in said plate and having a port communicating with said high pressure valve chamber, a port connecting said high and low pressure chambers, valves in said chambers controlling said ports, and means actuated by variation of the pressure in said valve chambers for operating said valves.

14. In an apparatus of the character described, the combination with a valve chamber having an inlet port, a valve controlling said port and a flexible diaphragm for actuating said valve, of barometrically controlled means for varying the gas pressure in said valve chamber comprising an aneroid operatively associated with said diaphragm for applying external pressure thereto, a spring arranged to resist expansion of said aneroid in a direction away from said diaphragm, and means for varying the resistance of said spring.

15. In an apparatus of the character described, the combination with a valve chamber having an inlet port, a valve controlling said port and a flexible diaphragm for actuating said valve, of barometrically controlled means for varying the gas pressure in said valve chamber comprising an aneroid operatively associated with said diaphragm for applying external pressure thereto, a flexible lever arranged to resist expansion of said aneroid in a direction away from said diaphragm, and a plurality of successively acting fulcra for said lever at different distances from the point of application of power thereto.

16. In an apparatus of the character described, the combination with a valve chamber having an inlet port, a valve controlling said port, and a flexible diaphragm for actuating said valve, of barometrically controlled means for varying the gas pressure in said valve chamber comprising an aneroid operatively associated with said diaphragm for applying external pressure thereto, a pair of spring arms at opposite sides of said aneroid and axially supporting the same, and a plurality of stops for one of said spring arms disposed at different distances from the axis of said aneroid and at different distances from the latter spring arm.

17. In an apparatus of the character described, the combination with a valve chamber having an inlet port, a valve controlling said port, and a flexible diaphragm for actuating said valve, of barometrically controlled means for varying the gas pressure in said valve chamber comprising an aneroid operatively associated with said diaphragm for applying external pressure thereto, a pair of spring arms at opposite sides of said aneroid and axially supporting the same, a plurality of adjustable screws adapted to coact with one of said spring arms, said screws being at different distances from the axis of said aneroid.

18. An apparatus of the character described comprising high and low pressure valve chambers, a high pressure inlet communicating with said high pressure chamber, pressure controlled means for admitting gas from said high pressure chamber to said low pressure chamber, an outlet leading from said low pressure chamber, barometrically controlled means for varying the flow of gas through said outlet at different altitudes, a pressure controlled indicator communicating with said outlet for indicating the flow of gas delivered at different altitudes, and a high pressure gauge connected with said high pressure inlet.

19. In an apparatus of the character described, the combination with a low pressure valve chamber, means for supplying gas thereto, and barometrically controlled means for varying the pressure in said valve chamber, of a discharge tube connected with said valve chamber, an adjustable valve plug in said discharge tube, the inner end of said valve plug being conical, and a passage through said valve plug having one or more openings through the conical portion thereof.

20. In an apparatus of the class described, the combination with a low pressure valve chamber, means for supplying gas thereto, and barometrically controlled means for varying the pressure in said valve chamber at different altitudes, of a plurality of discharge tubes connected with said valve chamber, and a valve for closing one of said tubes independently of the other.

21. In an apparatus of the class described, the combination with a low pressure valve chamber, means for supplying gas thereto, and barometrically controlled means for varying the pressure in said valve chamber at different altitudes, of a plurality of discharge tubes connected with said valve chamber, a valve for closing one of said tubes independently of the other, and an indicator for registering the flow of gas through one or both of said tubes.

22. In an apparatus of the character described, the combination with a block adapted to be mounted on a suitable support, said block having a threaded nipple, a duct through said nipple forming a high pressure inlet passage, a high pressure valve chamber connected with said passage, and an adapter adapted to screw upon said nipple and having an internal annular flange projecting into a recess at the outer end of said nipple, of a cup fitted in said recess around the duct through said nipple and fitting inside said annular flange when

the adapter is in place, a strainer in said cup, and a washer in said recess adapted to be compressed by said annular flange.

23. An apparatus of the character described comprising a base, a case adapted to fit upon and be secured to said base, a high pressure gauge in said case in position to be exposed through a sight opening at one end thereof, a flow meter mounted adjacent to said gauge and having an indicator adapted to be exposed through a sight opening at one side of said case, high and low pressure valve chambers in said case, a passage for supplying gas under high pressure to said high pressure chamber, a passage for conducting gas from said low pressure chamber to said flow meter, valve mechanism in said valve chambers for controlling the admission of gas from said inlet passage to said high pressure chamber and for controlling the admission of gas from said high pressure chamber to said low pressure chamber, a discharge pipe connected with said flow meter, an aneroid in said case adjacent to said low pressure chamber for varying the pressure of the gas therein at different altitudes, and differentially operating means in said case for varying the action of said aneroid at different altitudes.

24. An apparatus of the character described, comprising means for supplying gas at a substantially constant pressure, means for receiving such gas and delivering the same, an aneroid, and differentially operating means cooperating with said aneroid to control the volume of gas delivered by the latter means at different altitudes, said differentially operating means being arranged to compensate for temperature variation.

25. An apparatus of the character described, comprising means for supplying gas at a substantially constant pressure, means for receiving such gas and delivering the same, an aneroid, and a differentially operating spring cooperating with said aneroid to control the volume of gas delivered by the latter means at different altitudes, said differentially operating spring being arranged to compensate for temperature variation.

26. An apparatus for controlling the supply of gas in accordance with outside conditions which comprises a valve chamber, means for supplying gas under substantially constant pressure, a diaphragm extending across said chamber, a valve in said chamber operated in connection with said diaphragm and an aneroid arranged to exert pressure on said diaphragm in accordance with said outside pressure.

27. An apparatus for controlling the supply of gas in accordance with outside pressure conditions which comprises a valve chamber, means for admitting the gas under pressure to said chamber, a valve for controlling the admission of said gas, an exit from said chamber having resistance and an atmospheric barometer for controlling the pressure developed in said valve chamber in accordance with changes in said outside pressure.

28. An apparatus for controlling the supply of gas in accordance with outside pressure conditions which comprises a valve chamber, means for supplying gas under pressure to said chamber, a valve for controlling the admission of said gas, an exit from said chamber having resistance, means controlled by the outside pressure for controlling the pressure developed in said valve chamber in accordance with changes in said outside pressure and barometric means exposed to atmosphere for varying the resistance of said exit to control the rate of passage of gas therethrough.

29. An apparatus for controlling the supply of gas in accordance with outside pressure conditions which comprises a source of supply of gas under pressure, a distributing system having a definite resistance to the flow of gases, means controlled by said outside pressure conditions for controlling the pressure at which the gas in transmitted from said source of supply to said exit means, and means for varying the resistance in said distributing means to control the rate of flow of gases therethrough under definite pressure conditions, the last recited means including a barometer shell exposed to atmosphere.

30. An apparatus for controlling the supply of gas in accordance with outside pressure conditions which comprises a valve chamber adapted to receive the gas, a valve in said chamber, a diaphragm extending across said chamber, means for operating said valve upon a movement of said diaphragm, an aneroid connected to said diaphragm, said aneroid being yieldingly supported in relation to said diaphragm.

31. An apparatus for controlling the supply of gas in accordance with outside pressure conditions which comprises a valve chamber adapted to receive and distribute gas, a valve arranged to control the admission of gas to said chamber, a diaphragm extending across said chamber, means for operating said valve upon a movement of said diaphragm and means acted upon by atmospheric pressure to exert pressure on said diaphragm as said pressure decreases, said means being yieldingly supported in relation to said diaphragm.

THEODORE C. PROUTY.