Dec. 2, 1924.

1,517,841

R. C. KUHN

COLD AIR FACE

Filed June 16, 1922

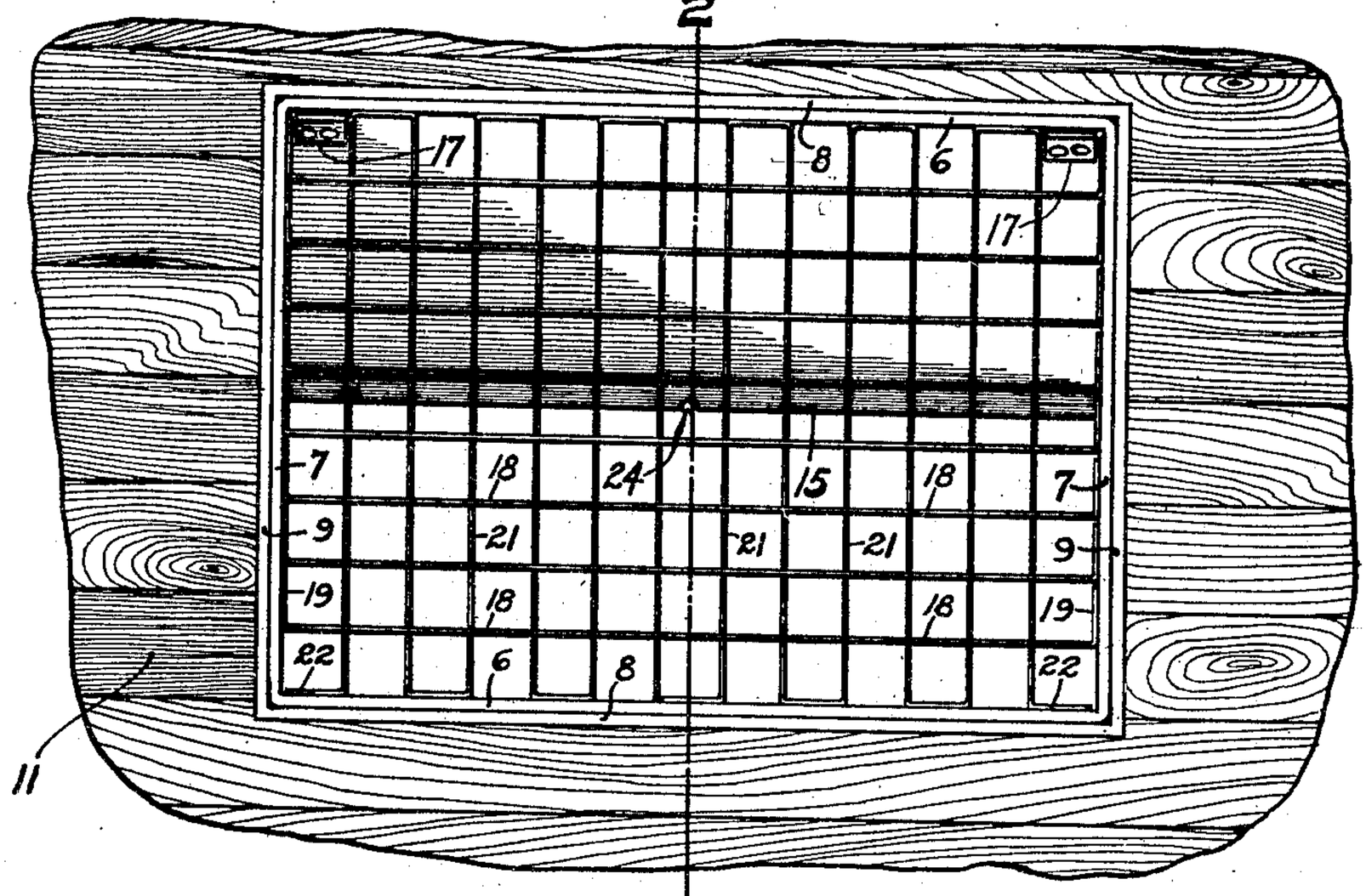

FIG. 1

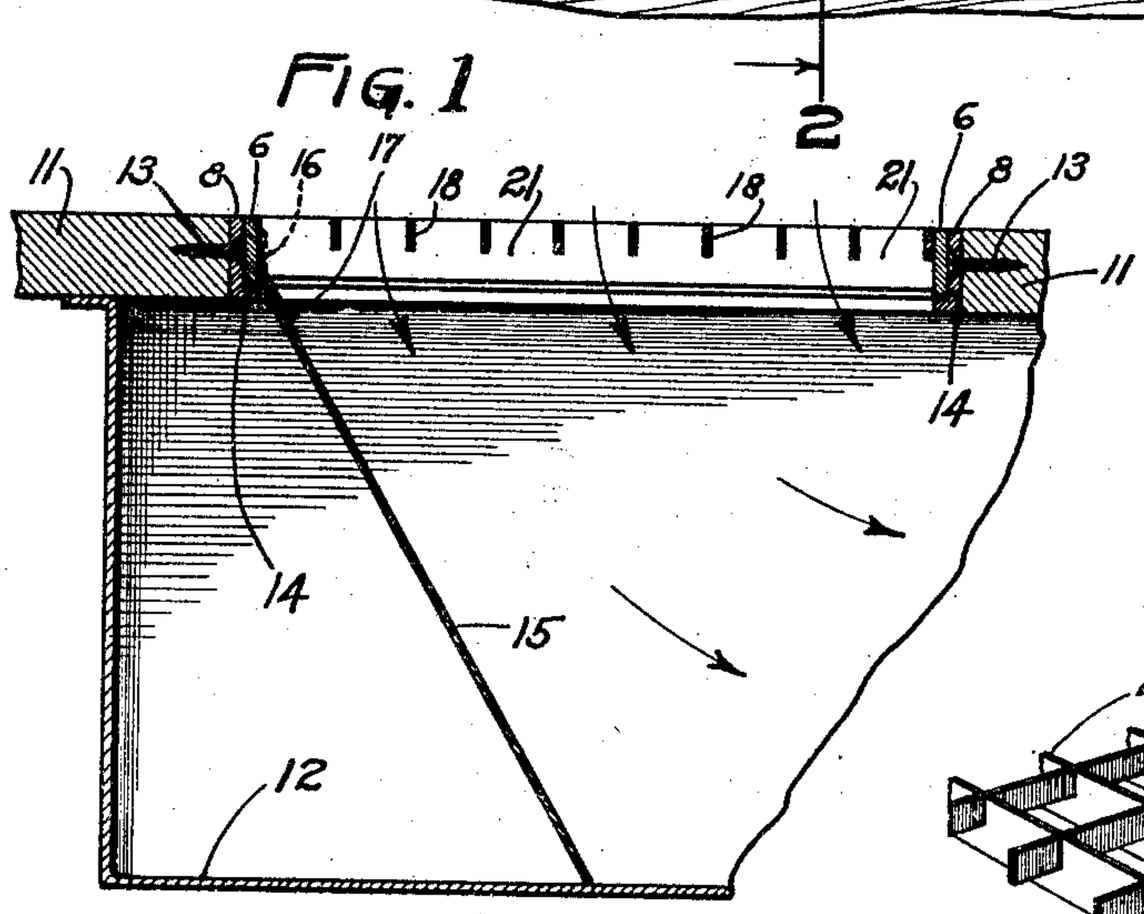

FIG. 2

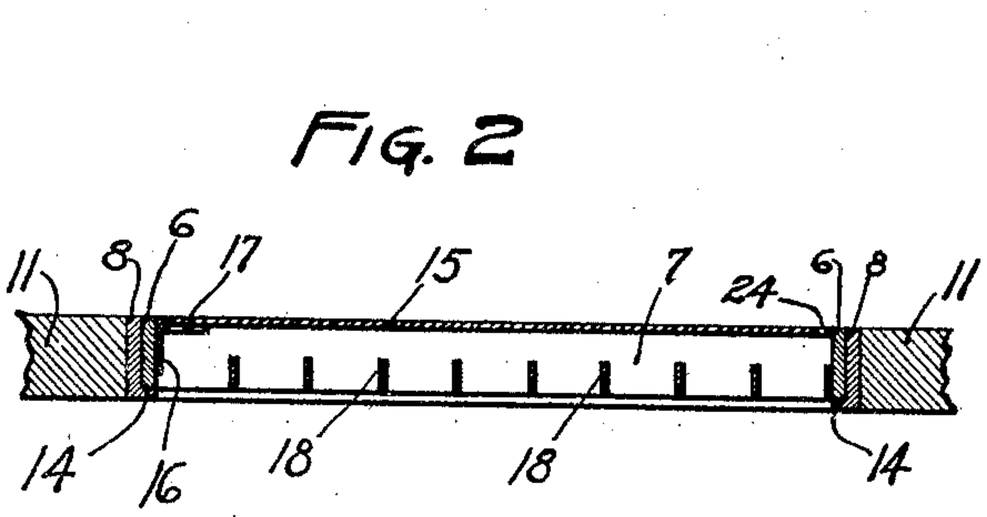

FIG. 3

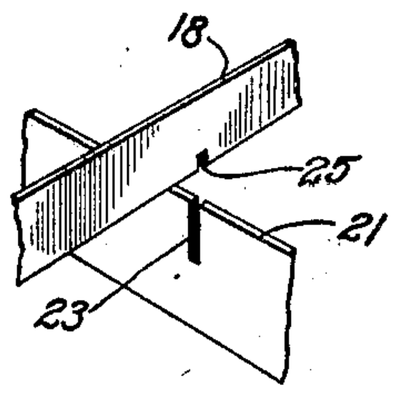

FIG. 5

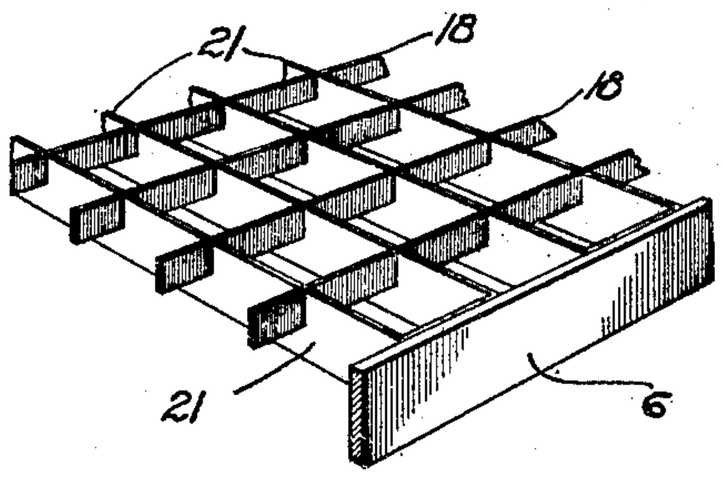

FIG. 4

INVENTOR
RUDOLPH C. KUHN

By Paul & Paul

ATTORNEYS

UNITED STATES PATENT OFFICE.

RUDOLPH C. KUHN, OF MINNEAPOLIS, MINNESOTA.

COLD-AIR FACE.

Application filed June 16, 1922. Serial No. 568,772.

To all whom it may concern:

Be it known that I, RUDOLPH C. KUHN, a citizen of the United States, resident of Minneapolis, county of Hennepin, and State of Minnesota, have invented certain new and useful Improvements in Cold-Air Faces, of which the following is a specification.

This invention is particularly useful in connection with heating plants of the hot air type. Formerly, the air supplied to such a plant was drawn from outside the building to be heated, thereafter passed thru the heater and then distributed to the building interior or rooms. More recently it has been the better practice to draw the cold air from the building interior by means of conduits, pipes or chutes leading from one or two points in the building to the heating plant. These cold air conduits usually terminate in horizontal openings provided in the floor or in vertical openings in the mop-board or base-board, so that the relatively cold, and therefore heavier, air will readily descend to the heater. Circulation of air is thus provided. These vertical or horizontal pipe openings are customarily provided with what are known in the trade as cold air faces. A function of the face is to permit air passage but to prevent passage of objects into the pipe. A disadvantage of

be understood that the invention is not confined to the exact features shown as various changes may be made within the scope of the claims which follow.

In the drawings:

Figure 1 is a view in plan of a cold air face with its seat shown in operative position in a floor;

Figure 2 is a vertical sectional view on the line 2—2 of Figure 1 and showing the face closure in normal open position;

Figure 3 is a fragmentary view similar to that of Figure 2 but showing the face frame in a position reversed with relation to that of Figures 1 and 2, and with the closure or cover in closed position;

Figure 4 is a fragmentary view in perspective of the elements forming the reticulated portion of the face; and

Figure 5 is a detail view showing the preferred method of interlocking the intersecting elements.

In the selected embodiment of the invention the face is formed with a frame having sides 6 and ends 7. This frame is preferably formed of a single piece of narrow sheet metal shaped into a rectangular form and having its abutting ends welded together. This open frame is provided with a reticulated portion completely covering the area comprehended by the frame. The

Dec. 2, 1924. 1,517,842

H. H. KUNZE

AUTOMATIC AIR CONTROLLER FOR PRESSURE TANKS

Filed July 29, 1921 2 Sheets-Sheet 1

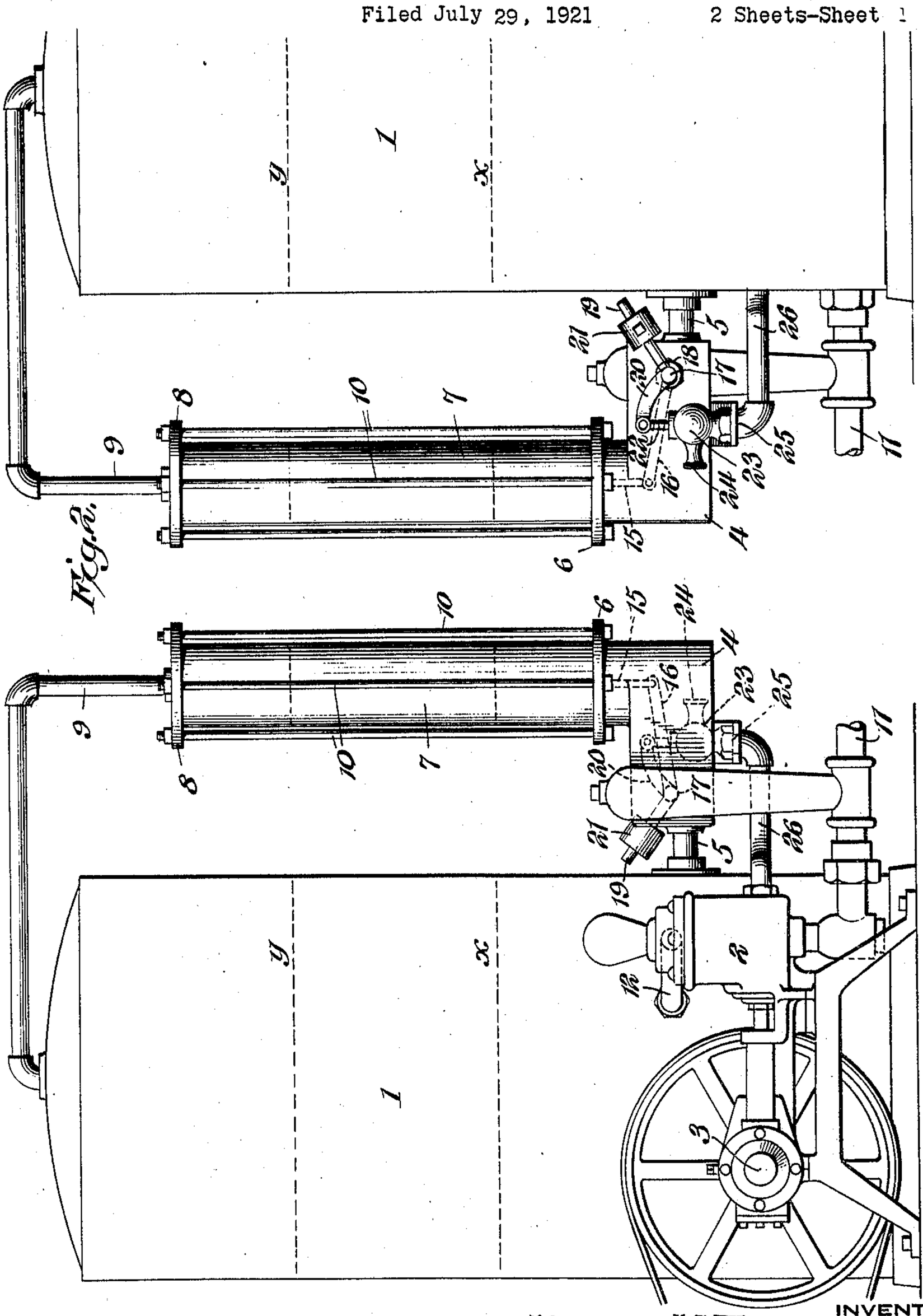

Fig. 1.

WITNESSES

Howard D. Orr.

F. T. Chapman.

INVENTOR,

Herman H. Kunze,

BY E. G. Siggers.

ATTORNEY