Jan. 1, 1924

1,479,110

B. H. SKELLY

NOZZLE ATTACHMENT FOR OIL GUNS

Original Filed June 15, 1921

FIG. 1.

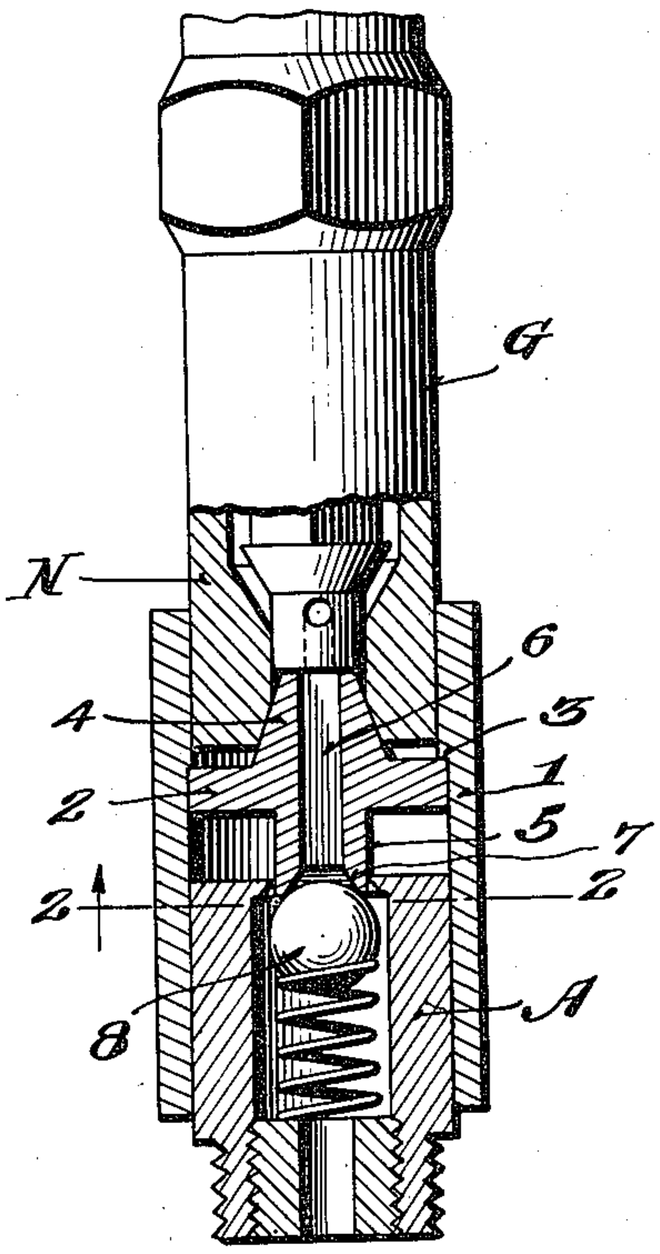

FIG. 3.

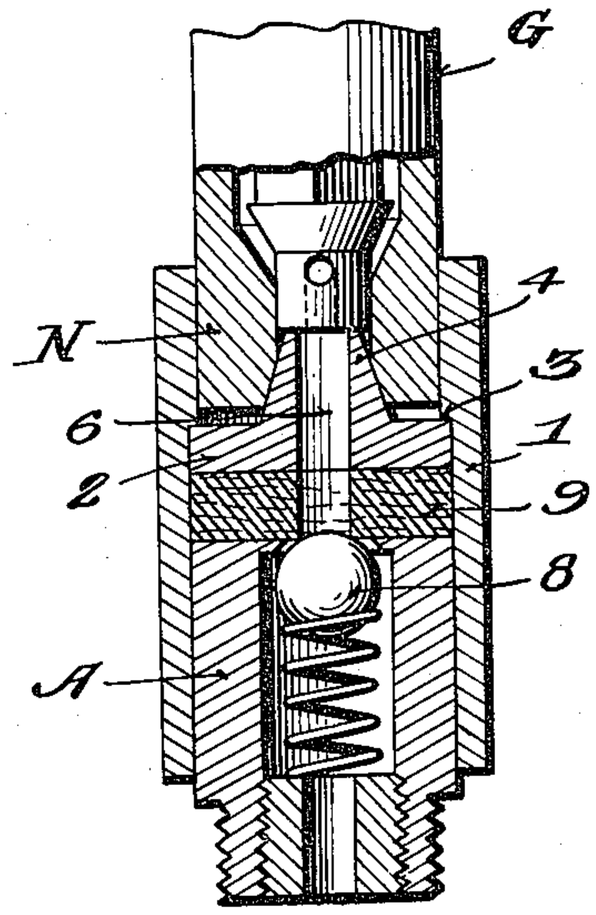

FIG. 2.

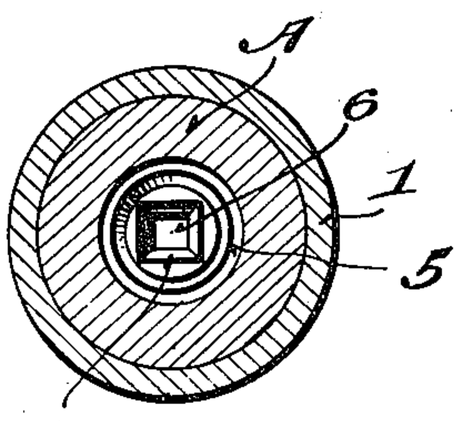

FIG. 4.

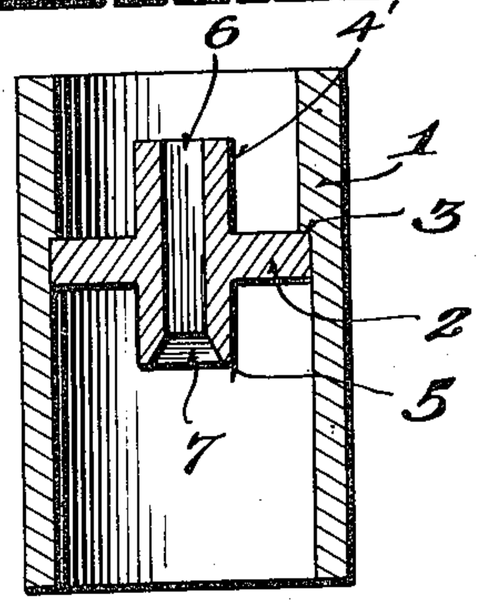

Bernard H. Skelly INVENTOR.

BY

ATTORNEY.

Patented Jan. 1, 1924. 1,479,110

UNITED STATES PATENT OFFICE.

BERNARD H. SKELLY, OF BRIDGEPORT, CONNECTICUT, ASSIGNOR TO BOWEN PRODUCTS CORPORATION, OF AUBURN, NEW YORK, A CORPORATION OF NEW YORK.

NOZZLE ATTACHMENT FOR OIL GUNS.

Application filed June 15, 1921, Serial No. 477,691. Renewed September 17, 1923.

To all whom it may concern:

Be it known that I, BERNARD H. SKELLY, a citizen of the United States, residing at the city of Bridgeport, in the county of Fairfield and State of Connecticut, have invented certain new and useful Improvements in Nozzle Attachments for Oil Guns; and I do declare the following to be a full, clear, and exact description of the invention, such as will enable others skilled in the art to which it appertains to make and use the same.

This invention relates to a nozzle attachment for an oil gun, whereby the gun may be utilized in connection with a nipple that is not so constructed as to receive the nozzle interiorly in telescoping relation.

Heretofore, nipples secured to the part to be lubricated have been formed with a hollow cup for receiving the nozzle of the oil gun, and with an exteriorly beveled element upstanding from the bottom of the cup and having an oil inlet which is normally closed at its lower end by a spring check valve, and the seating of the nozzle within the cup automatically opened a spring check valve in the nozzle so as to admit the oil, as is shown and described in my pending application, Serial Number 412,488, filed September 24, 1920.

But this construction necessitated the provision of a special form of nipple so that the nozzle of the oil gun, acting as a male member, would enter the nipple or female member, and it is the object of the present invention to enable the nozzle of the oil gun to be used in connection with ordinary nipples, and at the same time to require that no change in the construction of the nozzle need be made.

In the drawings:

Figure 1, is a side elevation partly in section of an oil gun equipped with the present invention;

Figure 2 is a section on line 2—2 of Figure 1;

Figure 3, is a view similar to Figure 1, of a modified form of the invention, and

Figure 4, is a detail view in section of a further modified form.

In proceeding in accordance with the present invention, a sleeve 1 is provided and formed to slide at one end over the nozzle N of an oil gun G and being detachable therefrom, and at its opposite end being formed to snugly slide over the nipple A. At or adjacent to the center of the interior of the sleeve is a disk 2 which is here shown as driven into the sleeve and abutting a shoulder 3, though any other suitable or preferred means for holding the disk may be resorted to if desired. The disk has a central oil passage and perforated bosses or projections 4 and 5 extending respectively upwardly and downwardly from the opposite faces of the disk, the perforations registering with the disk opening so that a continuous oil passage 6 results. The projection 4 engages and opens the valve 12 of the gun G and preferably has a conical periphery so as to conformably engage in the outlet of the gun. The projection 5 is formed at its outer end with a square beveled countersunk portion 7 which at its outer extremity engages the ball valve 8 of the nipple A and unseats the latter so that the oil then freely passes through the passage 6 and countersunk portion 7 and enters the nipple, the projection 5 entering the nipple as shown in Figure 1.

In the modified form shown in Figure 3 the projection 5 is omitted, the lower or bottom face of the disk 2 being consequently flat, a fiber or other washer 9 being employed which has its opening in register with the oil passage 6 so that when the sleeve 1 is forced over the nipple A, the washer 9 will seat on the outer end of the nipple to form an oil seal. In this form of the invention, the pressure of the oil upon extruding operation of the gun is relied upon to unseat the valve 8, whereas in Figure 1, the valve is positively held unseated throughout the time of attachment of the oil gun to the nipple.

A further modification is illustrated in Figure 4, wherein the upper projection 4′ is of uniform diameter and formed to unseat the gun valve as in the instance of the projection 4 of Fig. 1, being used in connection with guns the mouths of the nozzles of which are straight.

In all forms of the invention it will be seen that the invention provides an attachment which can be easily and quickly applied and removed from the gun, and which can be quickly slid over nipples of the type shown and the oil conducted directly into

the nipple by the projection 5 of Figures 1 and 4 so as to not enter the sleeve, while in Figure 3, the washer 9 acts to prevent the latter by sealing the nipple mouth.

What is claimed is:

1. An attachment for oil guns embodying a sleeve formed at one end to be received over the nozzle of a grease gun and at its opposite end to be telescoped over a nipple, a shoulder interiorly of the sleeve, and a disk in the sleeve abutting the shoulder and having upper and lower projections the former to engage and unseat the gun valve and the latter to engage and unseat the nipple ball valve, the disk and projections having an oil passage therethrough, the lower disk being formed with a non-circular countersink to engage the ball valve.

2. An attachment for oil guns embodying a sleeve formed at one end to be received over the nozzle of a grease gun and at its opposite end to be telescoped over a nipple, and a disk in the sleeve between the ends thereof and having an upper and a lower projection with an oil passage formed through the disk and both projections, the upper projection being formed to unseat the gun valve and the lower projection to unseat the ball valve of the nipple.

3. An attachment for oil guns embodying a sleeve formed at one end to be received over the nozzle of a grease gun and at its opposite end to be telescoped over a nipple, and a disk in the sleeve between the ends thereof and having an upper projection formed to enter the gun nozzle and to unseat the valve thereof, the disk and projection having an oil passage.

4. An attachment for oil guns embodying a sleeve formed at one end to be received over the nozzle of a grease gun and at its opposite end to be telescoped over a nipple, means in the sleeve to unseat the gun valve and means to direct oil from the unseating means into the nipple.

5. An attachment for oil guns embodying a sleeve formed at one end to be received over the nozzle of a grease gun and at its opposite end to be telescoped over a nipple, and means in the sleeve to unseat the gun valve and to allow the oil to enter the nipple.

In testimony whereof I affix my signature hereto.

BERNARD H. SKELLY.