A. BLOCK.

KEEPER.

APPLICATION FILED JUNE 21, 1920.

1,377,458. Patented May 10, 1921.

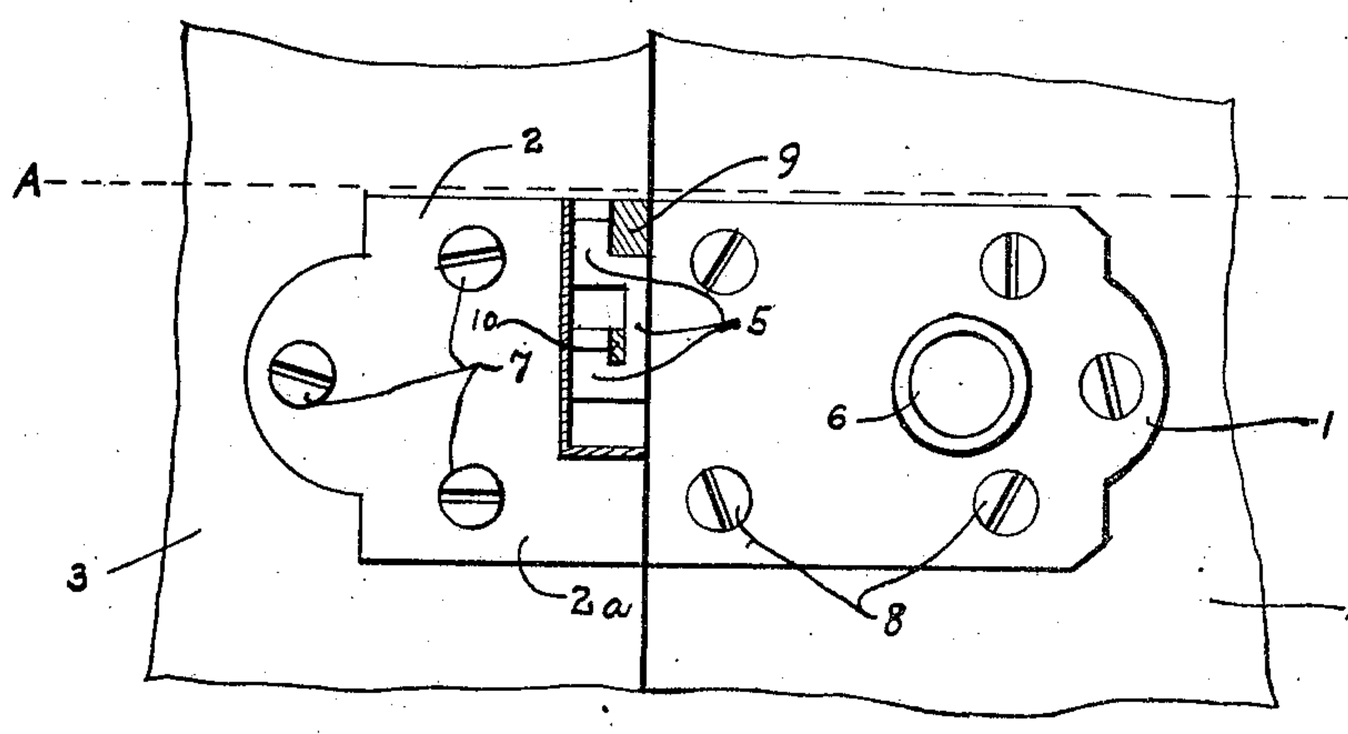

FIG. 1

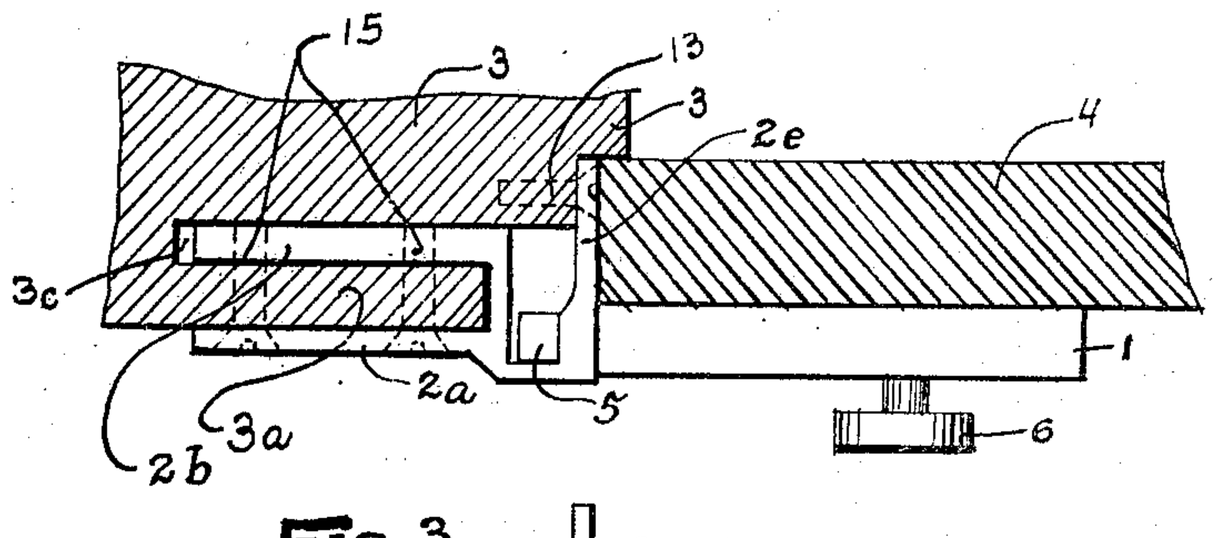

FIG. 2

FIG. 3

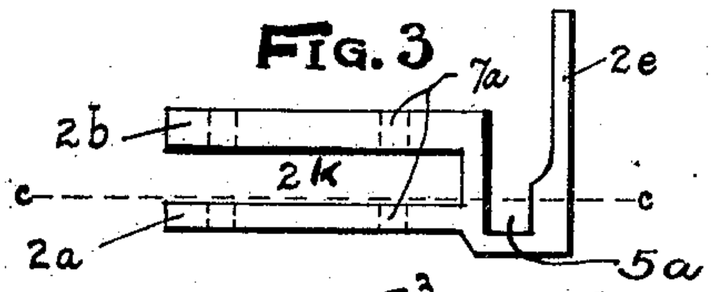

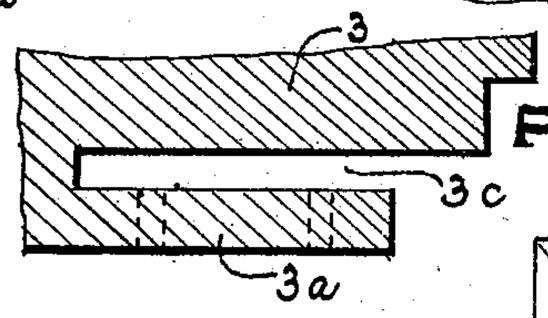

FIG. 4

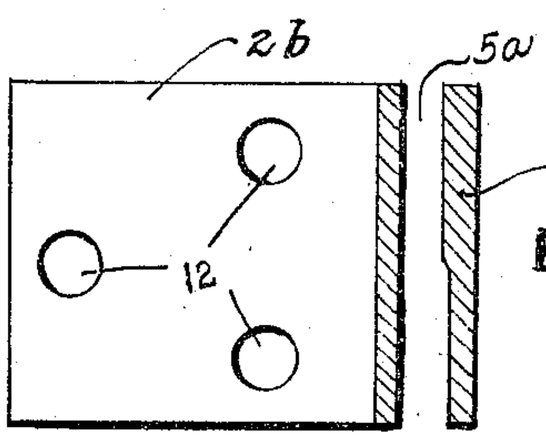

FIG. 5

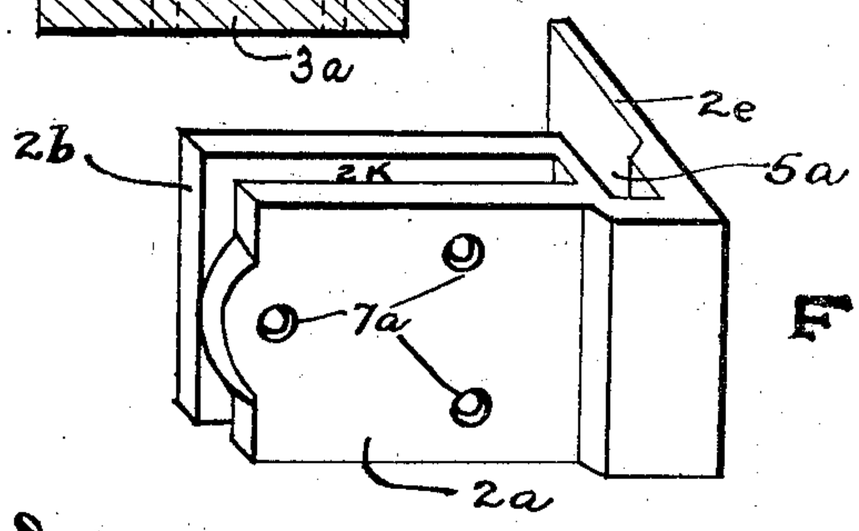

FIG. 6

Witnesses:

Samuel Altholz

Fred'k Tuyper

INVENTOR

Alexander Block

UNITED STATES PATENT OFFICE.

ALEXANDER BLOCK, OF NEW YORK, N. Y.

KEEPER.

1,377,458. Specification of Letters Patent. Patented May 10, 1921.

Application filed June 21, 1920. Serial No. 390,411.

To all whom it may concern:

Be it known that I, ALEXANDER BLOCK, a citizen of the United States, and resident of New York city, in the county of New York and State of New York, have invented certain new and useful Improvements in Keepers, of which the following is a specification.

This invention relates to keepers, and more particularly to improvements in said keepers, with a view to rendering them burglar-proof.

The ordinary type of keeper affords very little protection to a door even where the bolt is jimmy-proof in character. Where a burglar finds that he is unable to jimmy the bolt, he tears away the keeper through the instrumentality of a chisel or jimmy, and thereby opens the door.

In the present invention, opening of the door through the above-mentioned instrumentality is rendered well nigh impossible.

The keeper is shown in connection with a type of lock embodying one of my improvements in locks, but only by way of illustration and not by way of limitation. Such a keeper may be used with any other type of bolt.

In the accompanying drawings, Figure 1 shows a front elevation of the lock and the keeper attached to the door and door jamb respectively. Fig. 2 is a cross-section of the door and jamb at A—A, giving an upper edge view of the lock and the keeper as they appear when attached to the door and jamb respectively. Fig. 3 is an upper edge view of the keeper. Fig. 4 is a sectional view of the door jamb on a line A—A in Fig. 1. Fig. 5 is a longitudinal sectional view of the keeper on a line C—C in Fig. 3. Fig. 6 is a perspective view of the keeper.

The lock body may be of the general or any suitable construction, having any type of bolt for locking the door. But the said keeper is preferably applied to a lock of the construction shown in the appended drawings. The keeper comprises one or more compartments 5^a wherein the bolt is received, a latch strike plate 2^e, a rim plate 2^a and a mortise plate 2^b preferably connected with each other and leaving a preferably rectangular slot between them for receiving a section of the door-jamb or mate door to which said keeper may be attached. The rim and mortise plate are both connected to the body of the keeper proper. A mortise or hole is made in the door-jamb or door to which said keeper is to be attached, the mortise plate of said keeper being arranged to be inserted into said mortise, and the rim plate of said keeper adapted to fit onto and cover the inner aspect of said door-jamb or mate door, a section of which jamb or door being thereby inclosed between said two plates.

The mortise plate 2^b is provided with holes 12, and the rim plate 2^a with holes 7^a, the said holes of the rim plate and the mortise plate being in alinement with each other and affording means for joining the two plates preferably by means of bolt or machine screws 7, which pass through the section of the door-jamb or mate door and securely fasten said plates in position and thus prevent displacement of said plates and said keeper from said jamb or mate door. The projection or leg 2^e of said keeper is further secured to the door-jamb by means preferably of wood screw 13.

To apply this keeper to the jamb or mate door, a hole 3^c is cut into said jamb or mate door, said hole being made large enough to receive the mortise plate 2^b of said keeper. Thus a section of wood is left at the inner side of the door-jamb of a size to fit into rectangular opening 2^k between said mortise and rim plates, through which section said two plates are joined preferably by means of bolt or machine screws and secured to said jamb or mate door. It is evident that the keeper is rendered as jimmy-proof as the lock body, or even more so, through its mortise plate and rim plate being practically embedded in and inclosing a large portion of the jamb or mate door to which they are securely held by means of machine or bolt screws, which not only hold the wood but pass through both metal plates.

Having thus described the invention, what I claim as new and desire to secure by Letters Patent, is:

1. A door jamb keeper having a mortise plate adapted to be taken into a hole in said jamb, and a latch strike plate extended at an angle to the length of said mortise plate and forming a compartment therewith for receiving a locking projection.

2. A door jamb keeper having a mortise plate and a rim plate disposed substantially parallel to each other, said plates forming a substantially rectangular compartment between them, a hole in the door jamb arranged to receive said mortise plate, a section of said

door jamb adapted to be taken into said substantially rectangular compartment, and a latch strike plate extended at an angle to the length of said mortise plate and forming a chamber with said parallel plates for receiving a locking projection.

3. A door jamb keeper having a divided compartment for receiving a multiple-headed locking projection, and two substantially parallel plates extending therefrom, one of said plates being adapted to be taken into a hole in said jamb, and the other of said plates to cover the jamb, means being provided for connecting said plates and securing them to the jamb, additional means being provided for securing the keeper proper to said jamb.

Signed at the city of New York, in the county of New York and State of New York this 18th day of June, A. D. 1920.

ALEXANDER BLOCK.

Witnesses:

SAMUEL ALTHOTZ,

HARRY KALISCHER.