US012224568B2

(12) **United States Patent**
Li et al.

(10) **Patent No.: US 12,224,568 B2**
(45) **Date of Patent: *Feb. 11, 2025**

(54) **BACK-TO-BACK TWO-GANG ELECTRICAL BOX**

(71) Applicant: **Hubbell Incorporated**, Shelton, CT (US)

(72) Inventors: **Jian Hua Li**, Bayside, NY (US); **Joseph Nicholas Cretella**, Ansonia, CT (US)

(73) Assignee: **HUBBELL INCORPORATED**, Shelton, CT (US)

(*) Notice: Subject to any disclaimer, the term of this patent is extended or adjusted under 35 U.S.C. 154(b) by 0 days.

This patent is subject to a terminal disclaimer.

(21) Appl. No.: **18/333,671**

(22) Filed: **Jun. 13, 2023**

(65) **Prior Publication Data**

US 2023/0327415 A1 Oct. 12, 2023

Related U.S. Application Data

(63) Continuation of application No. 17/572,041, filed on Jan. 10, 2022, now Pat. No. 11,715,941.

(60) Provisional application No. 63/136,127, filed on Jan. 11, 2021.

(51) **Int. Cl.**
H02G 3/08 (2006.01)
H02G 3/14 (2006.01)

(52) **U.S. Cl.**
CPC ***H02G 3/086*** (2013.01); ***H02G 3/083*** (2013.01); ***H02G 3/14*** (2013.01)

(58) **Field of Classification Search**
CPC H02G 3/086
See application file for complete search history.

(56) **References Cited**

U.S. PATENT DOCUMENTS

2,932,683	A	4/1960	Flachbarth	
4,240,688	A	12/1980	Sotolongo	
4,470,656	A	9/1984	Moser	
4,958,048	A	9/1990	Bell	
5,025,944	A	6/1991	Rodick	
7,234,670	B1	6/2007	Gretz	
8,739,997	B1 *	6/2014	Ploof	H02G 3/14 174/67
10,622,794	B1 *	4/2020	Holleschau	H05B 45/37
2006/0231282	A1	10/2006	Greenfield	
2009/0255703	A1 *	10/2009	Vigorito	H02G 3/081 174/67
2012/0222896	A1	9/2012	Haberek	

(Continued)

OTHER PUBLICATIONS

Office Action (Notice of Allowance and Fees Due (PTOL-85)) dated Mar. 23, 2023 for U.S. Appl. No. 17/572,041 (pp. 1-7).

(Continued)

Primary Examiner — Hung V Ngo
(74) *Attorney, Agent, or Firm* — Dilworth IP, LLC

(57) **ABSTRACT**

An electrical box including a central housing with a first side opening, a second side opening opposite the first side opening, and a rear opening, each of the first and second side openings configured to receive an electrical or data interface device, a first extension compartment around the first side opening, the first extension compartment including a first door, and a second extension compartment around the second side opening, the second extension compartment including a second door.

19 Claims, 15 Drawing Sheets

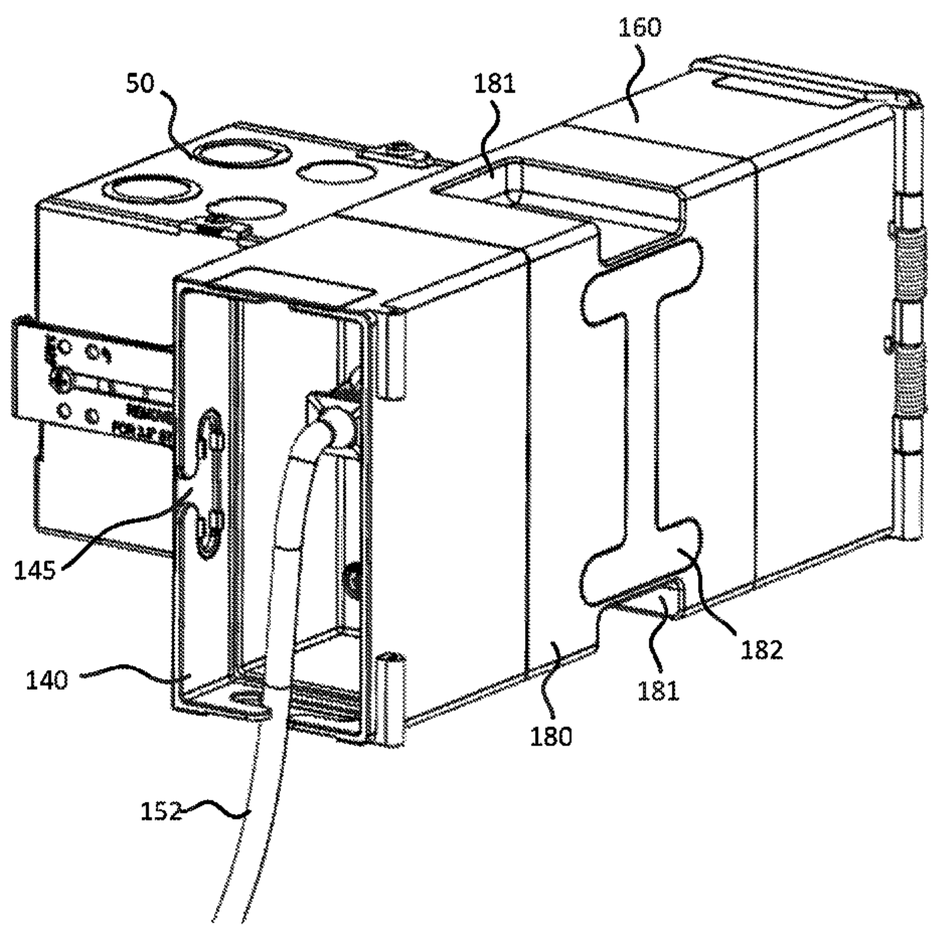

(56) **References Cited**

U.S. PATENT DOCUMENTS

2013/0299208	A1*	11/2013	Moldovan	H02G 3/086 174/50
2018/0048132	A1	2/2018	Dinh	
2020/0196466	A1	6/2020	Fischl	
2021/0076524	A1	3/2021	Bala	
2021/0127508	A1	4/2021	Wang	
2023/0216285	A1*	7/2023	Winnie	H02G 3/105 174/50

OTHER PUBLICATIONS

Gard-N-Post Supports & Enclosures brochure, Arlington, aifittings.com, 2006, pp. 1-12.
Receptacle Bollard Installation Instructions, B-K Lighting, 2015, pp. 1-2.
Receptacle Bollard Specifications Listing, B-K Lighting, 2020, pp. 1-3.
Wiremold Outdoor Charging Stations brochure and specifications, legrand, www.legrand.us/wiremold, 2016, pp. 1-12.

* cited by examiner

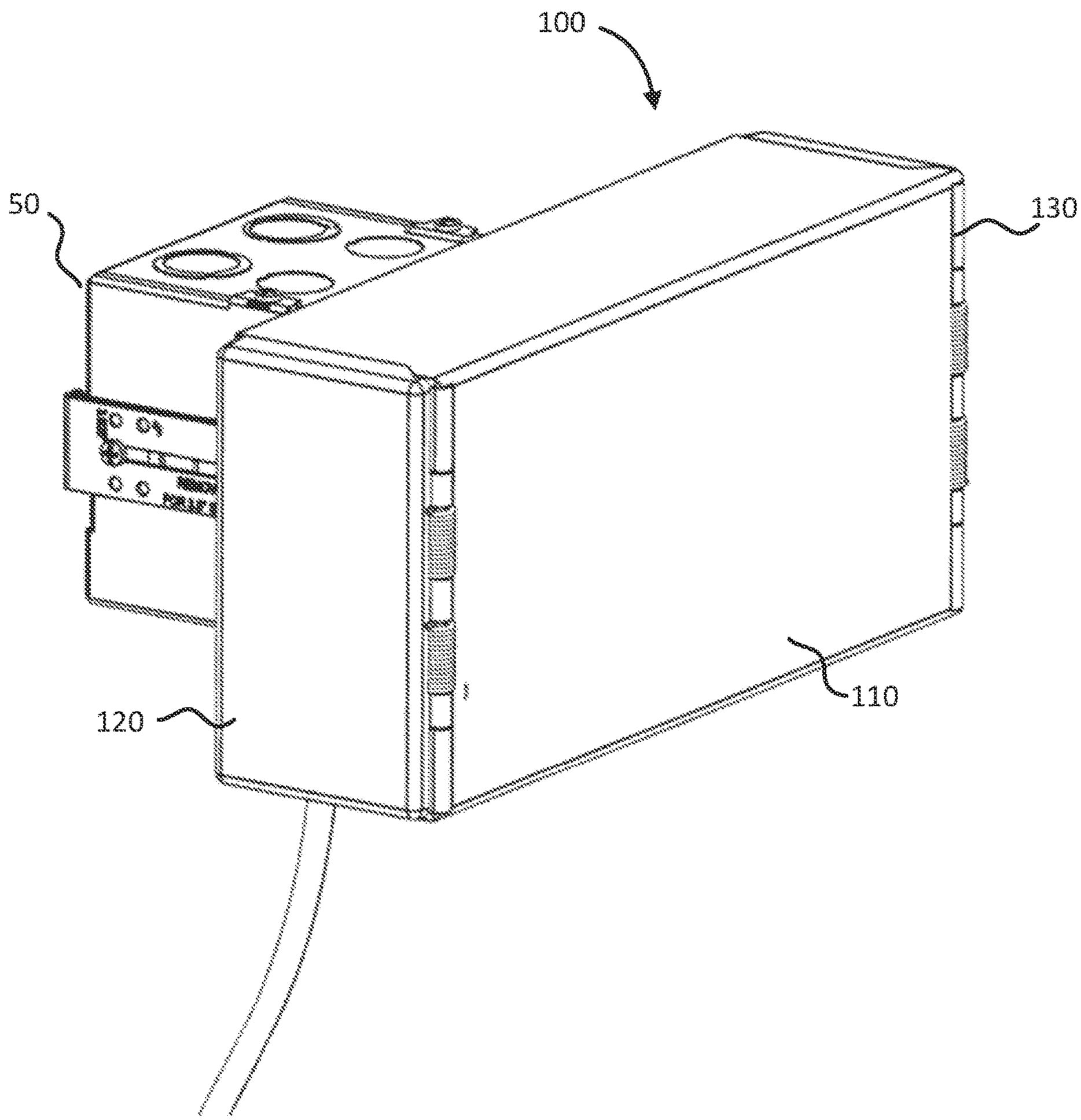

FIG. 1

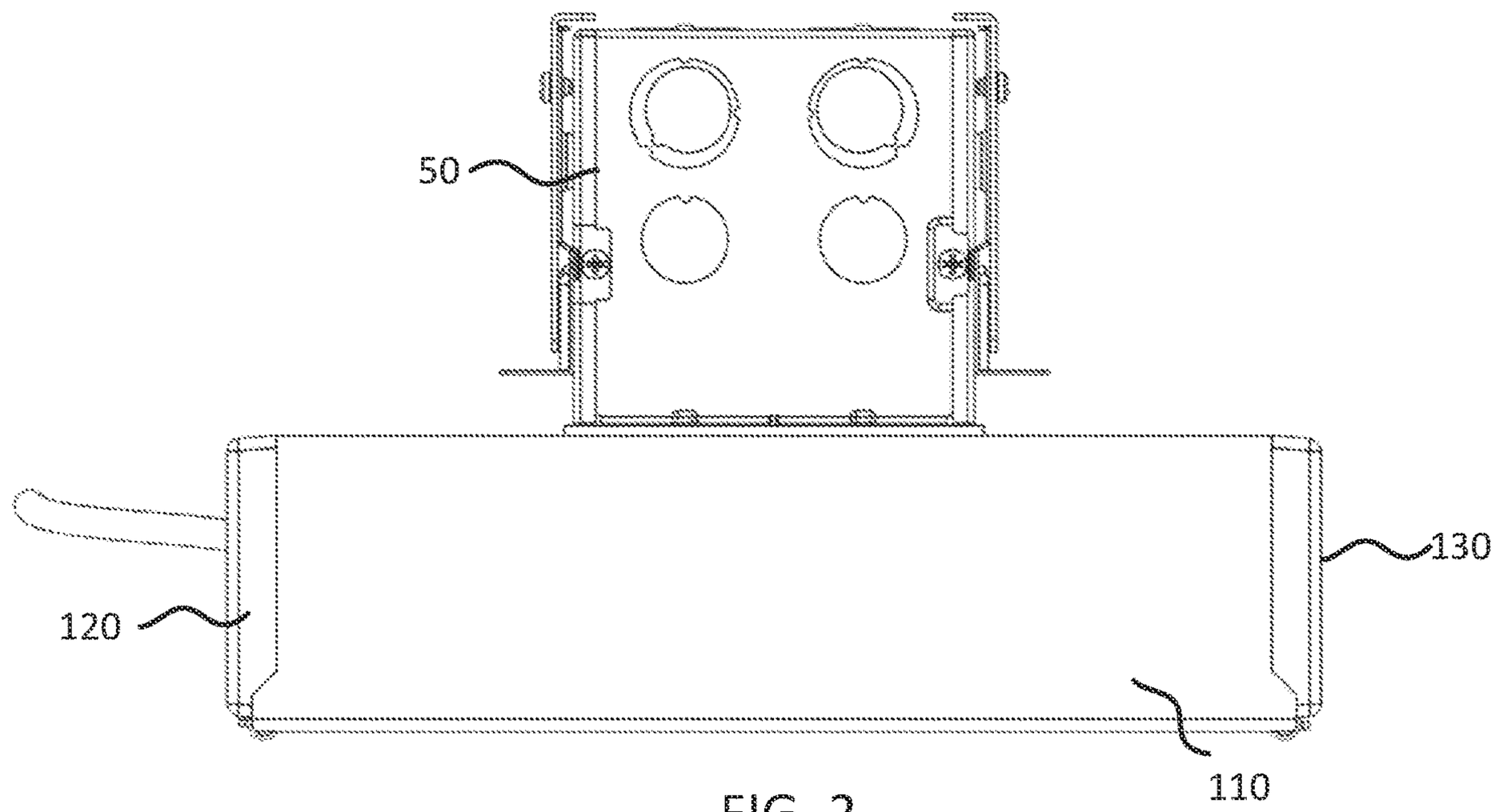

FIG. 2

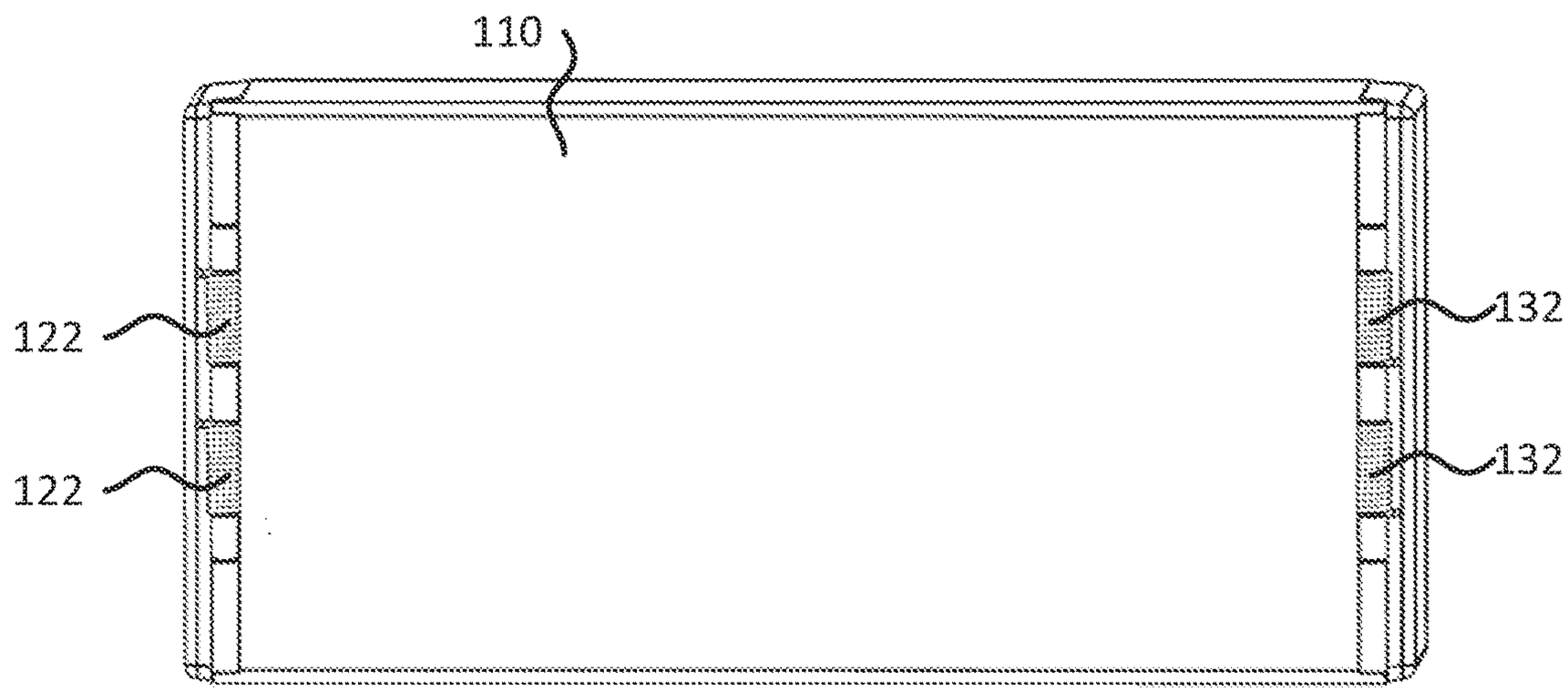

FIG. 3

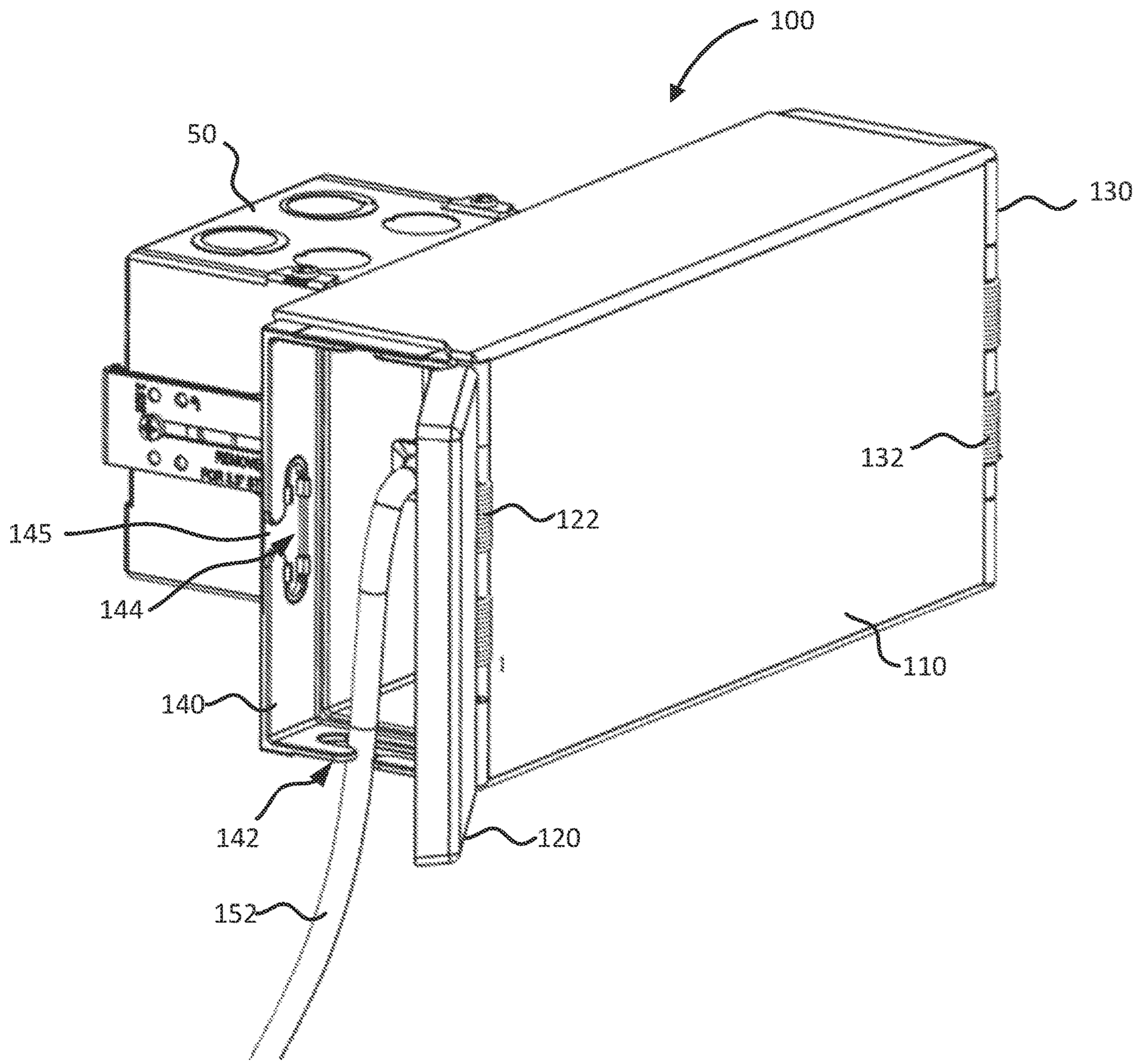

FIG. 4

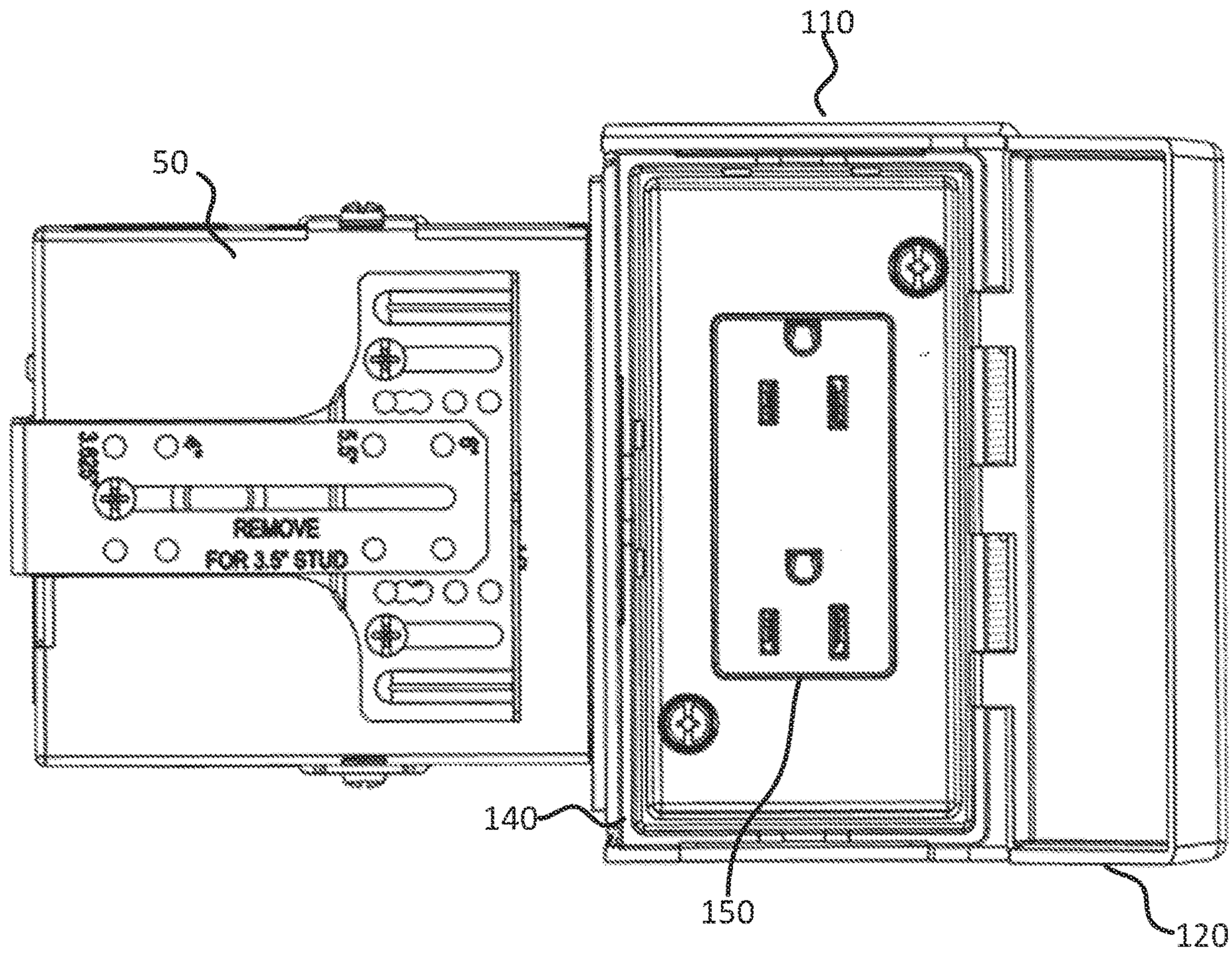

FIG. 5A

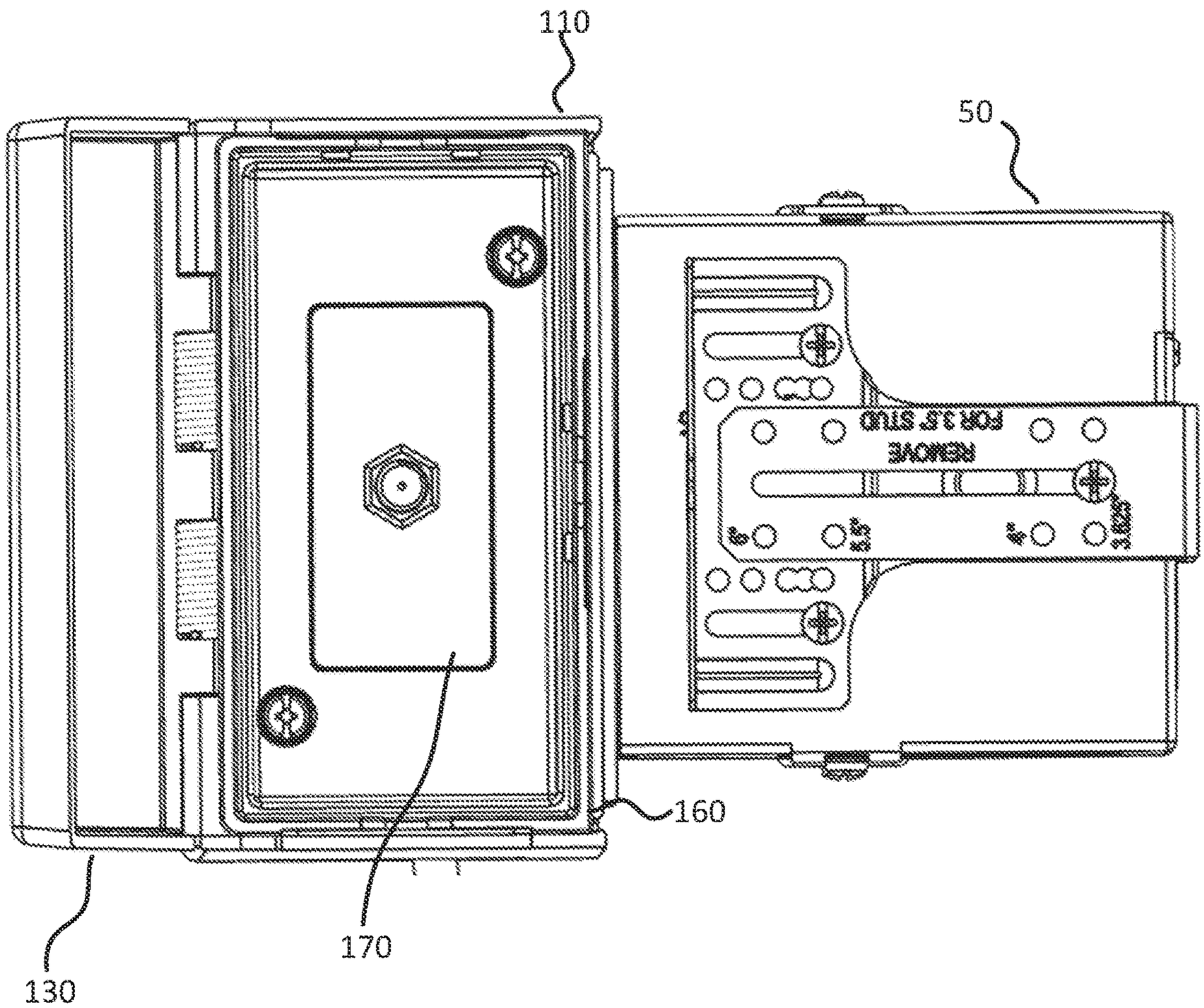

FIG. 5B

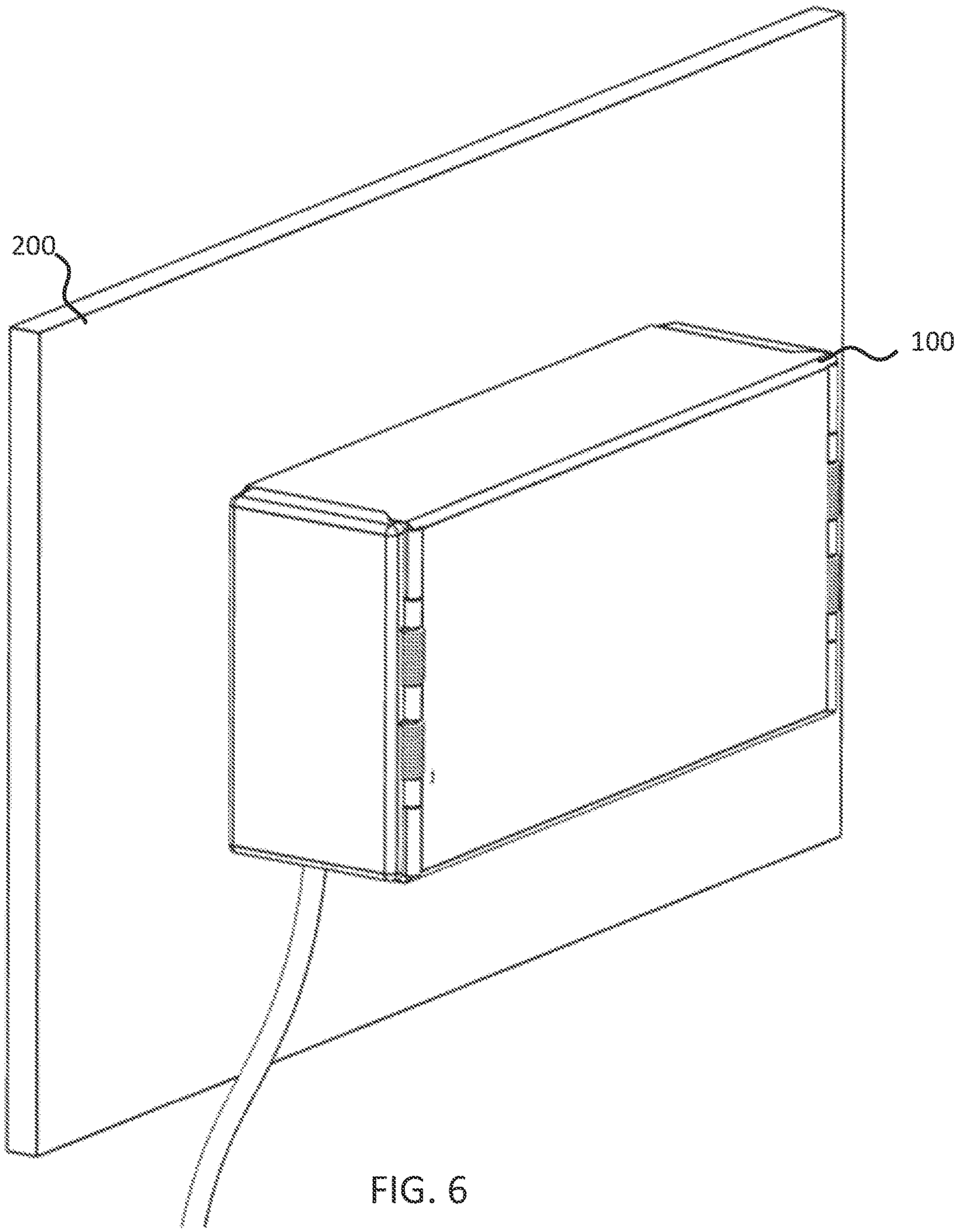

FIG. 6

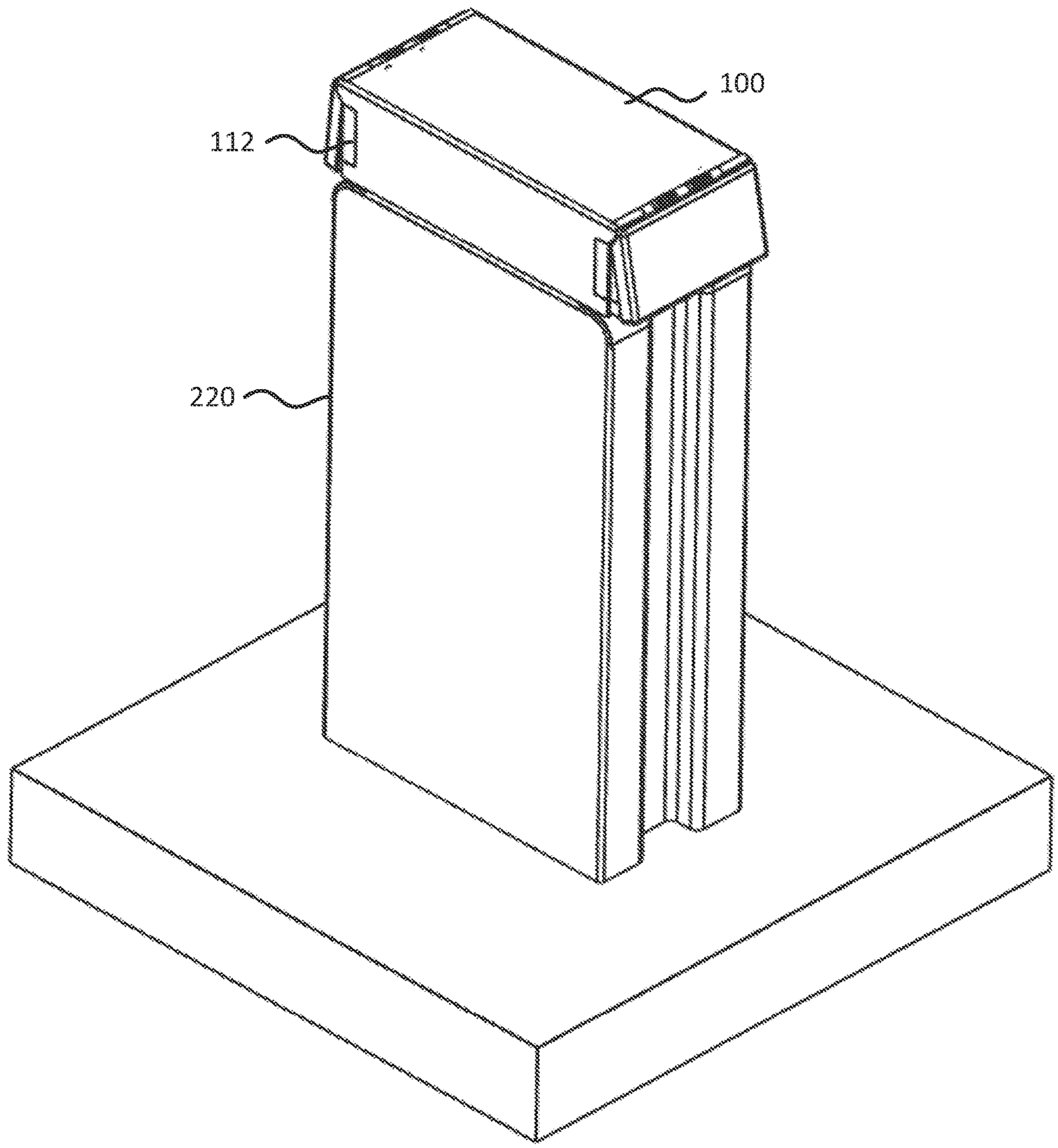

FIG. 7

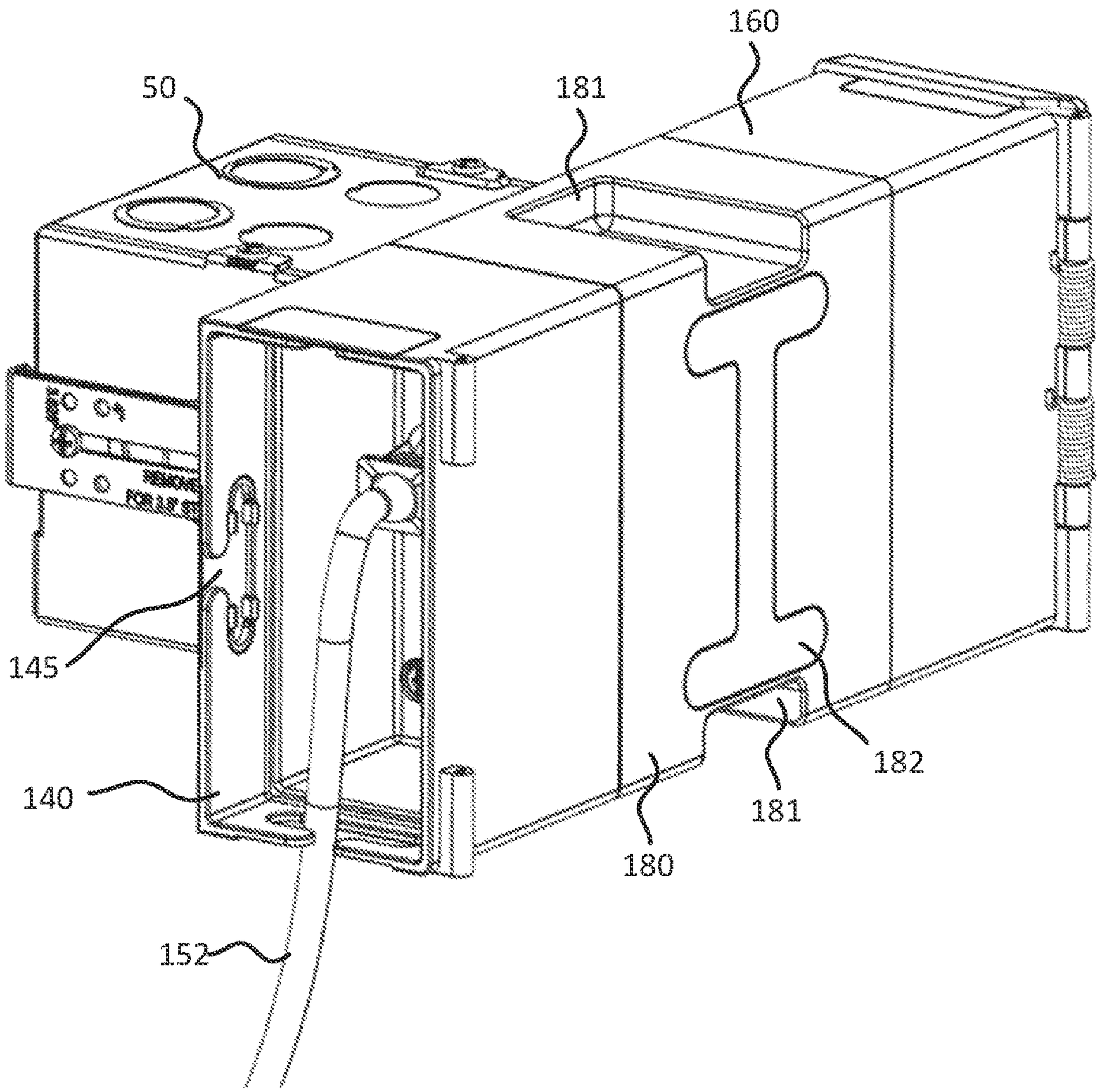

FIG. 8A

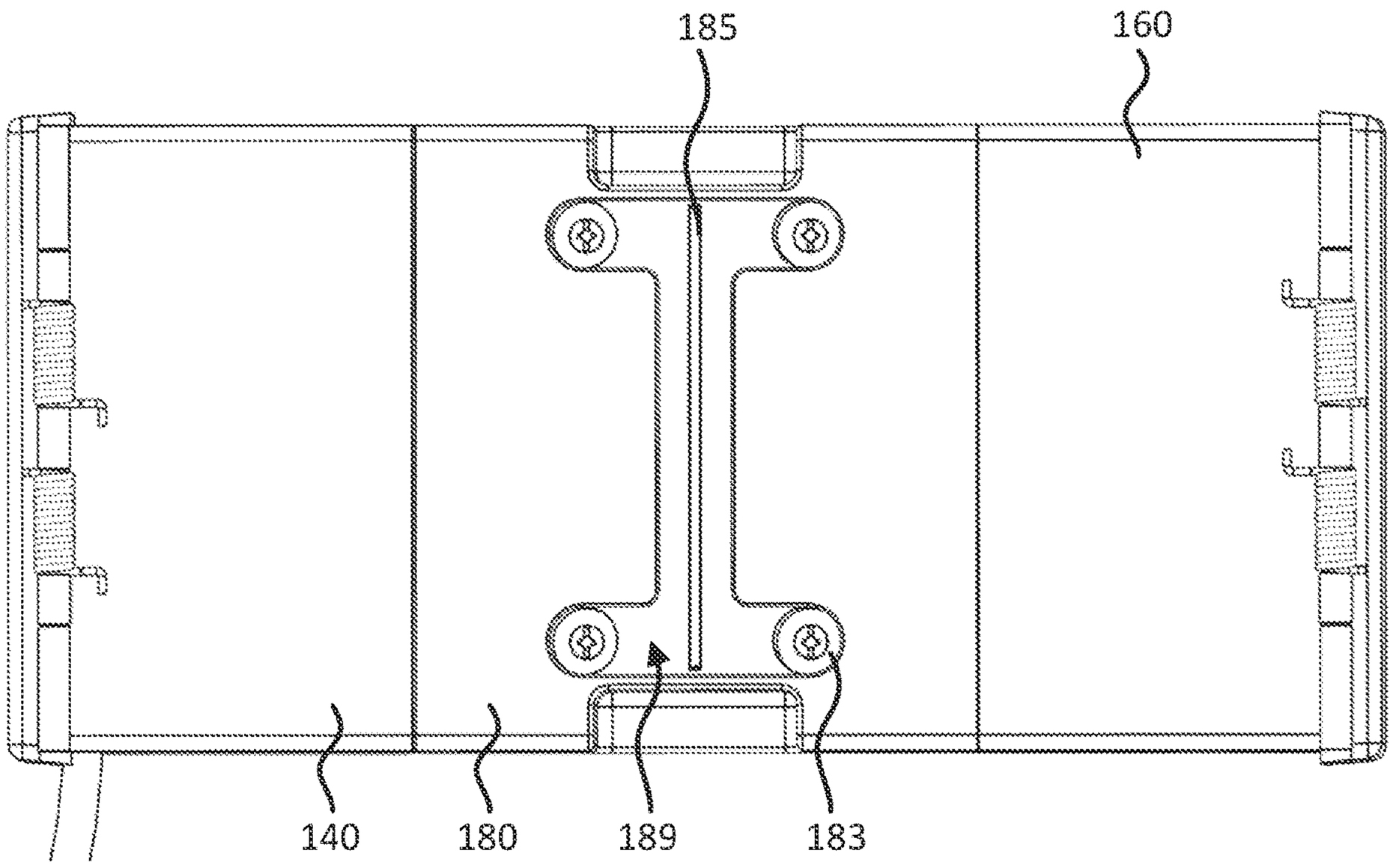

FIG. 8B

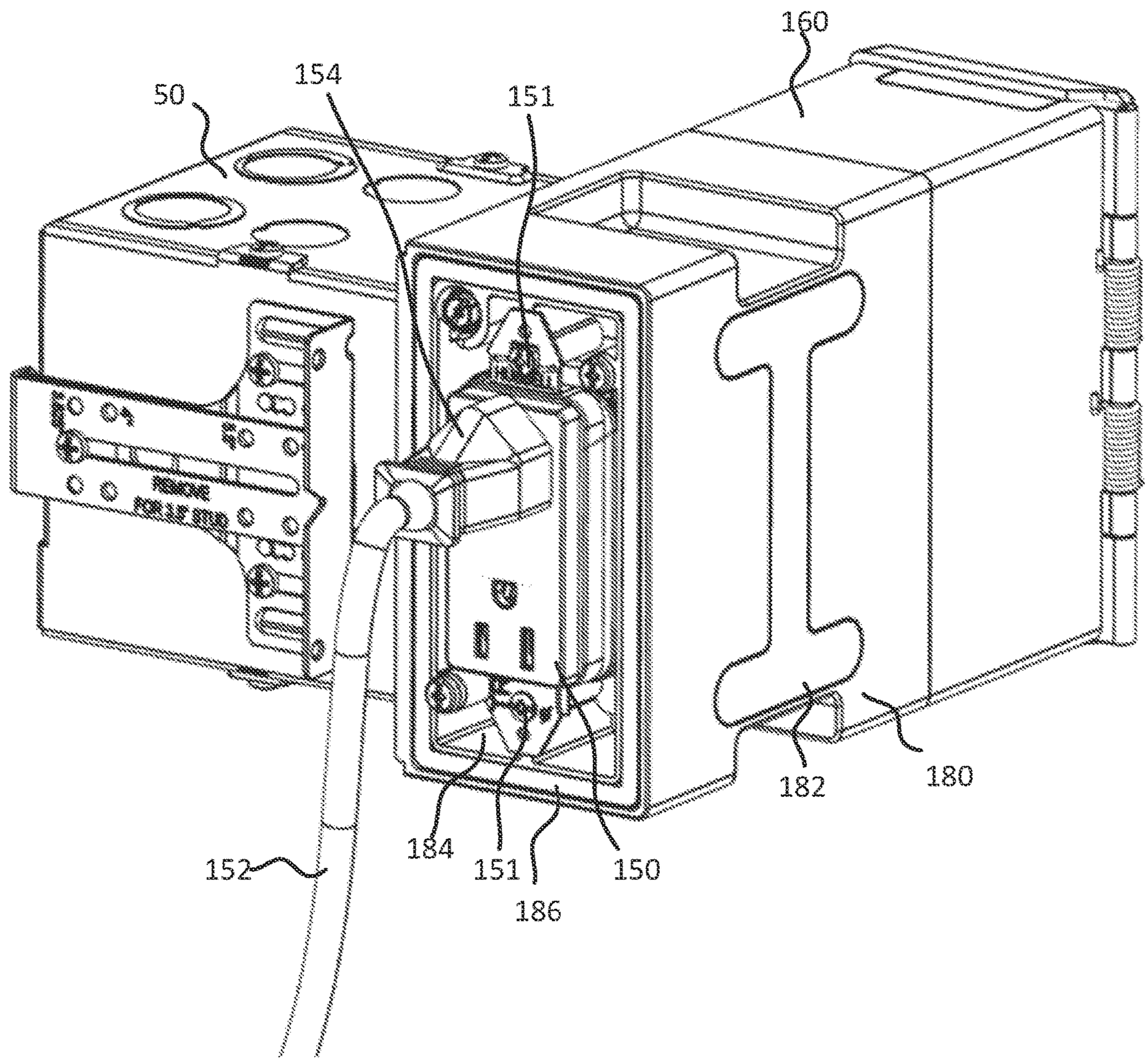

FIG. 9

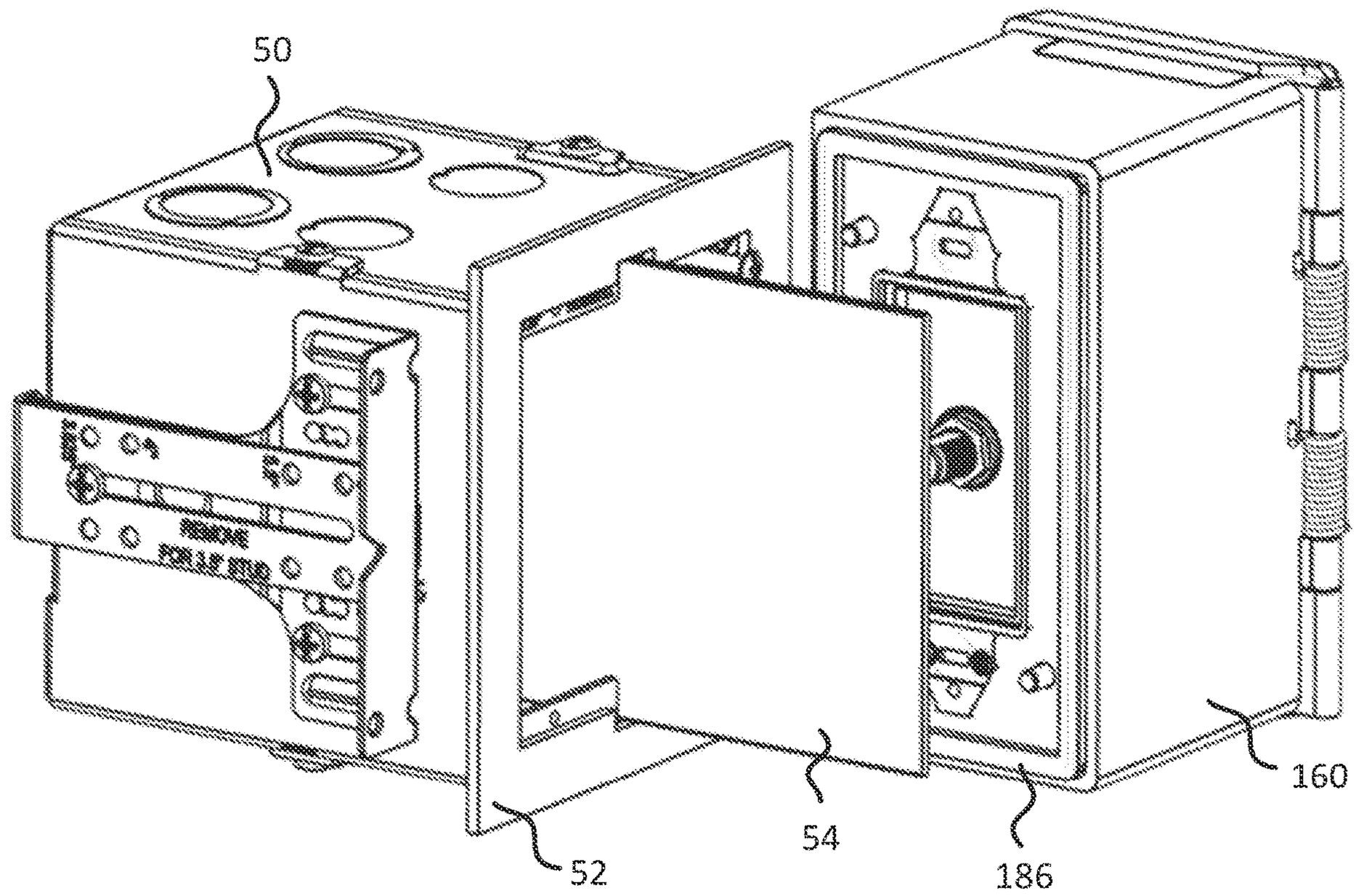

FIG. 10

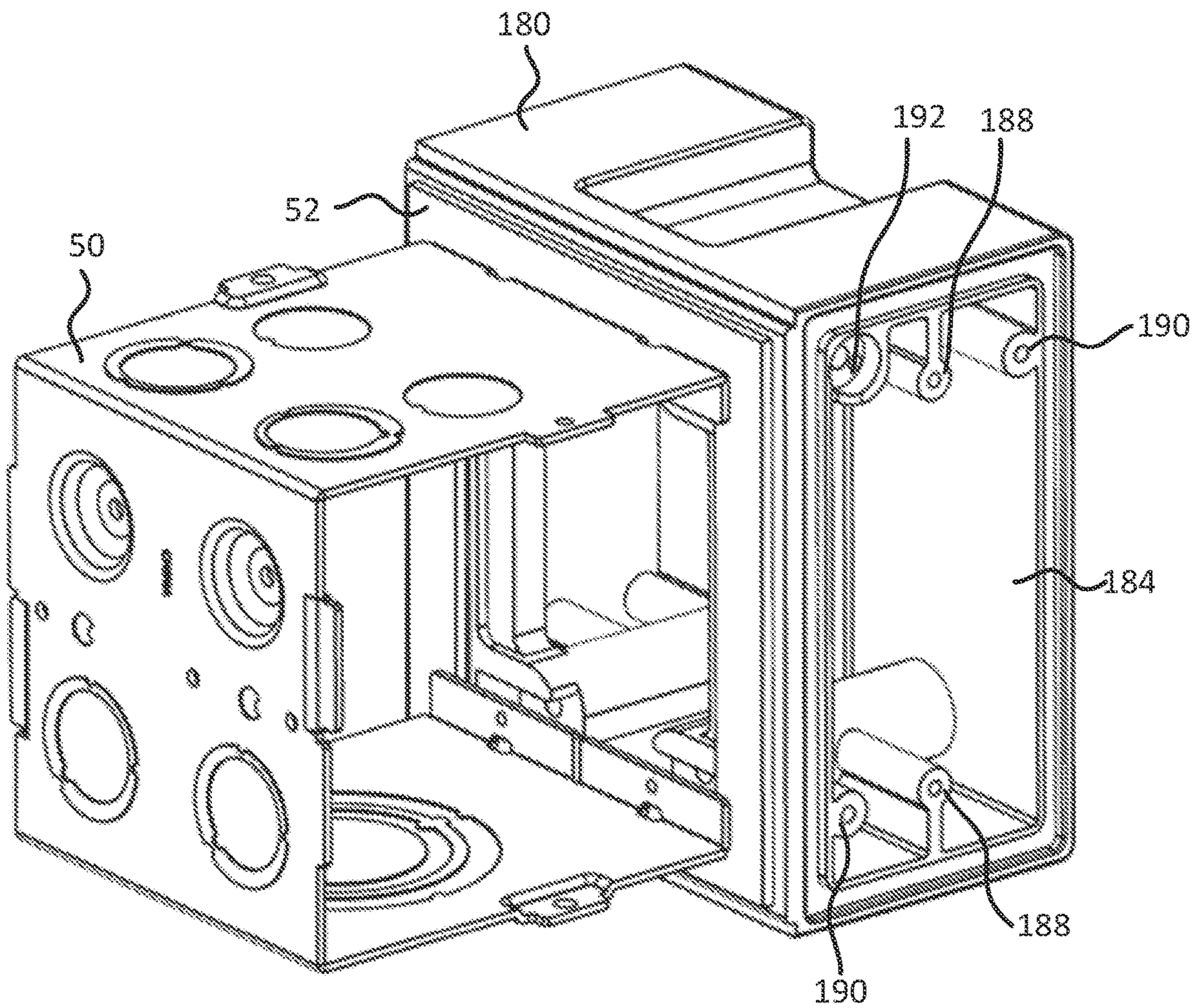

FIG. 11

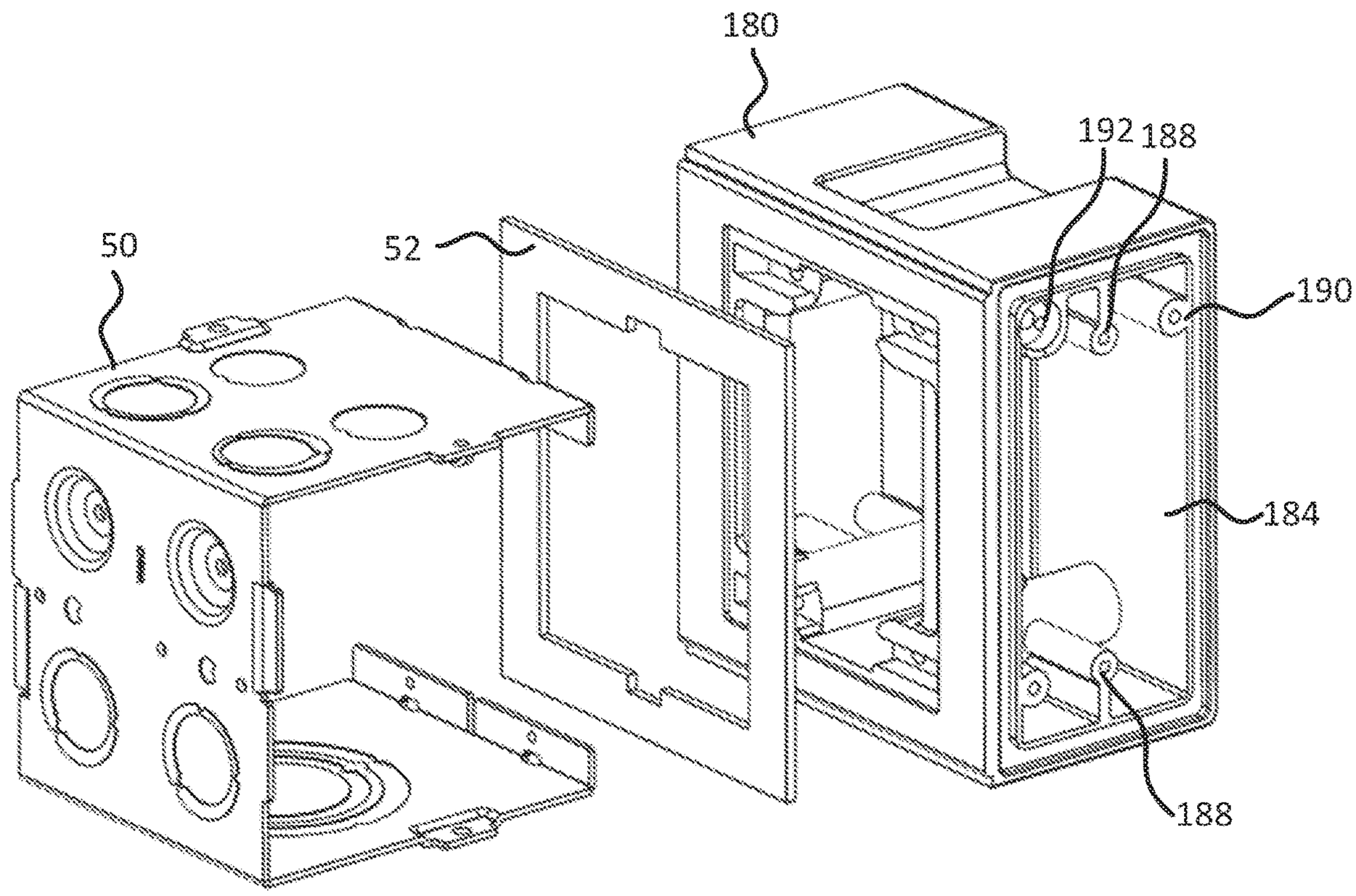

FIG. 12

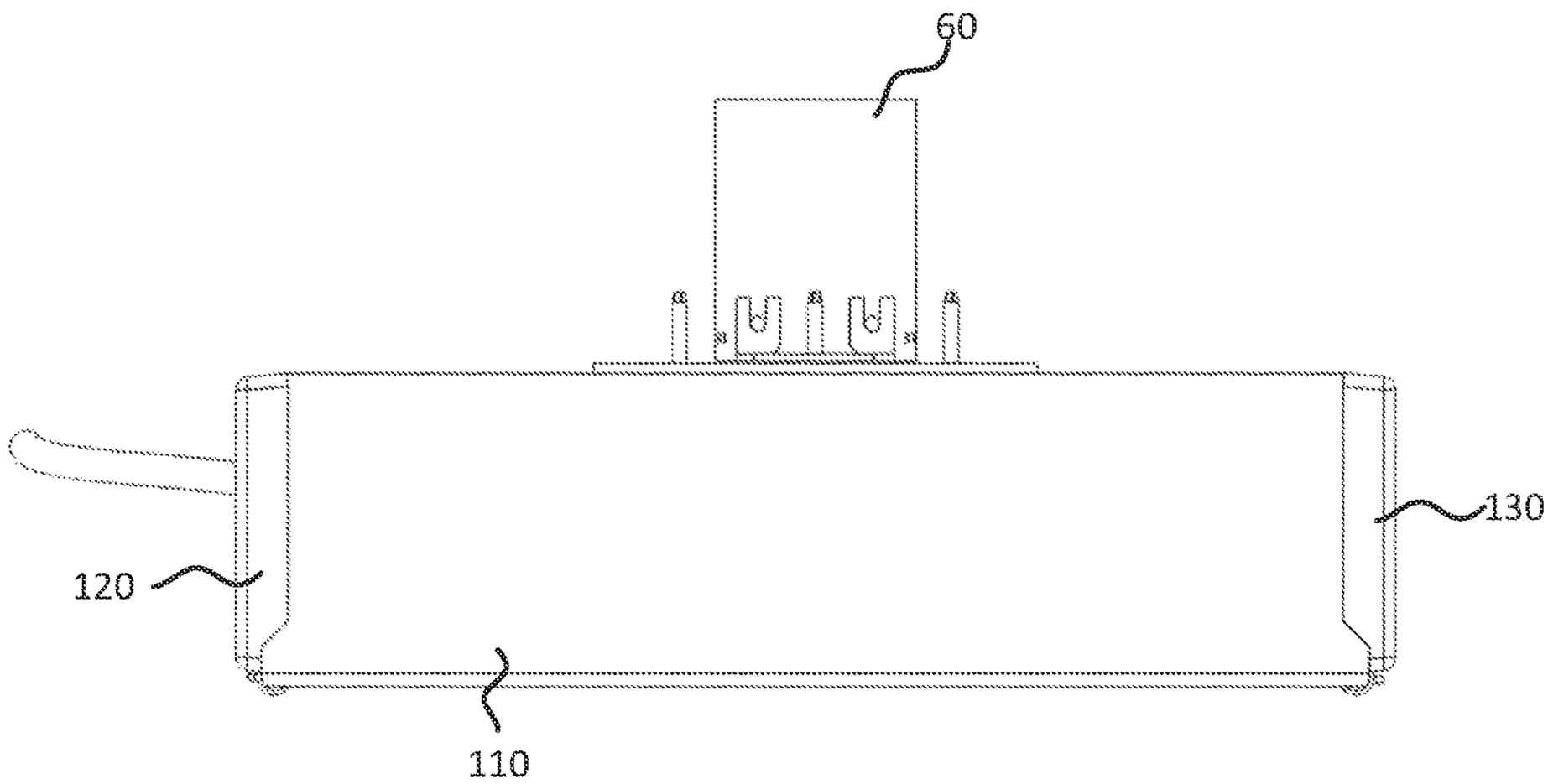

FIG. 13

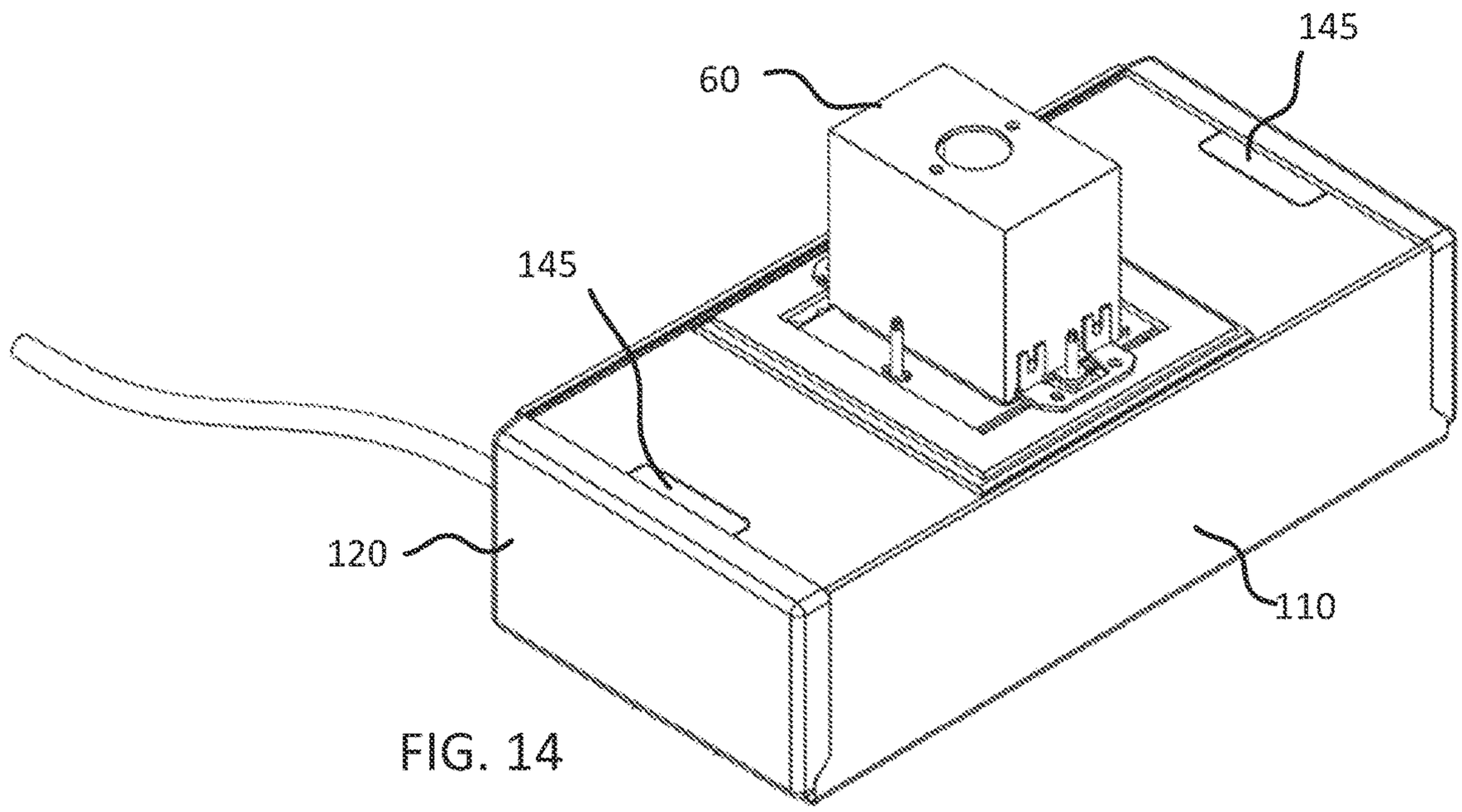

FIG. 14

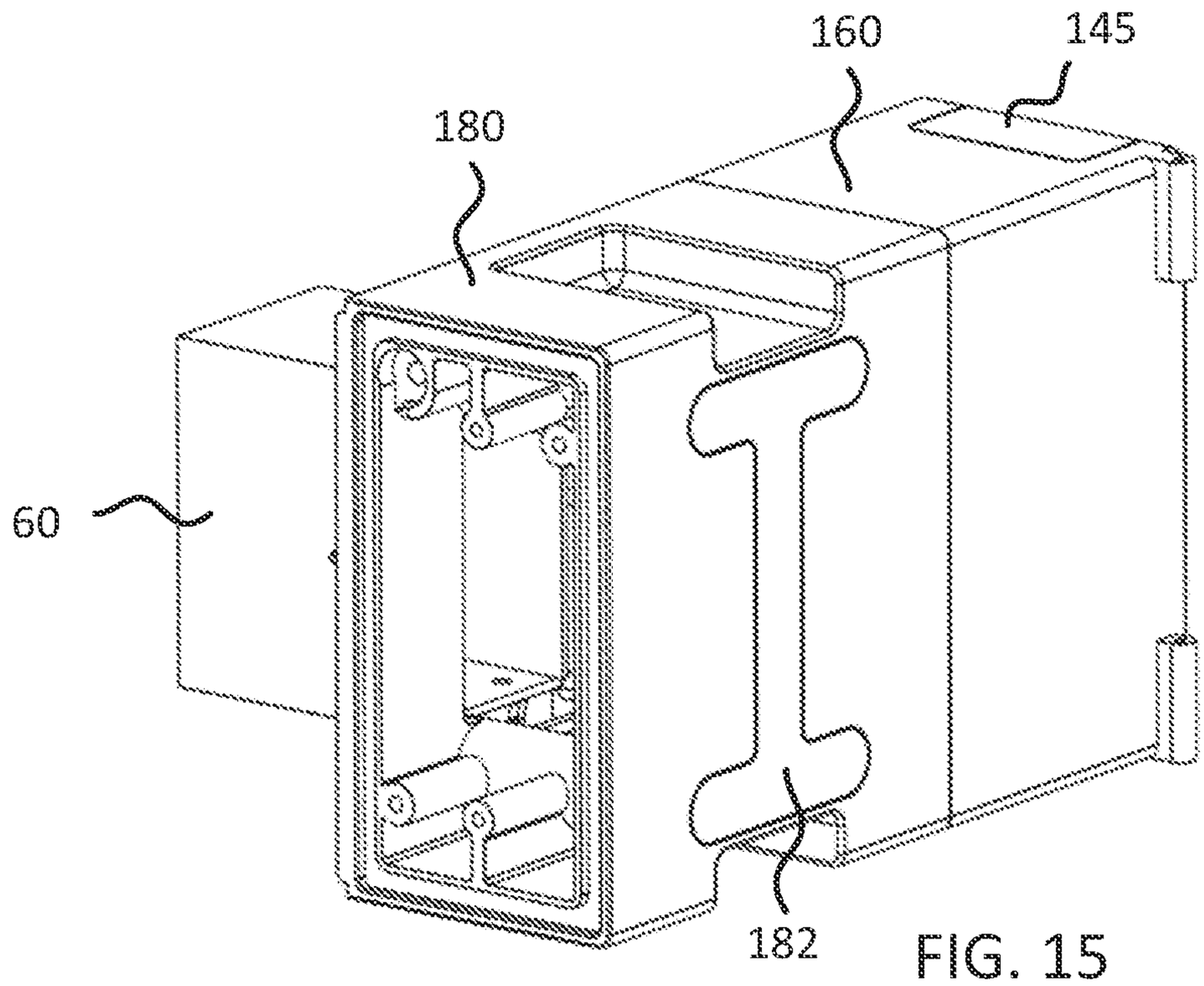

FIG. 15

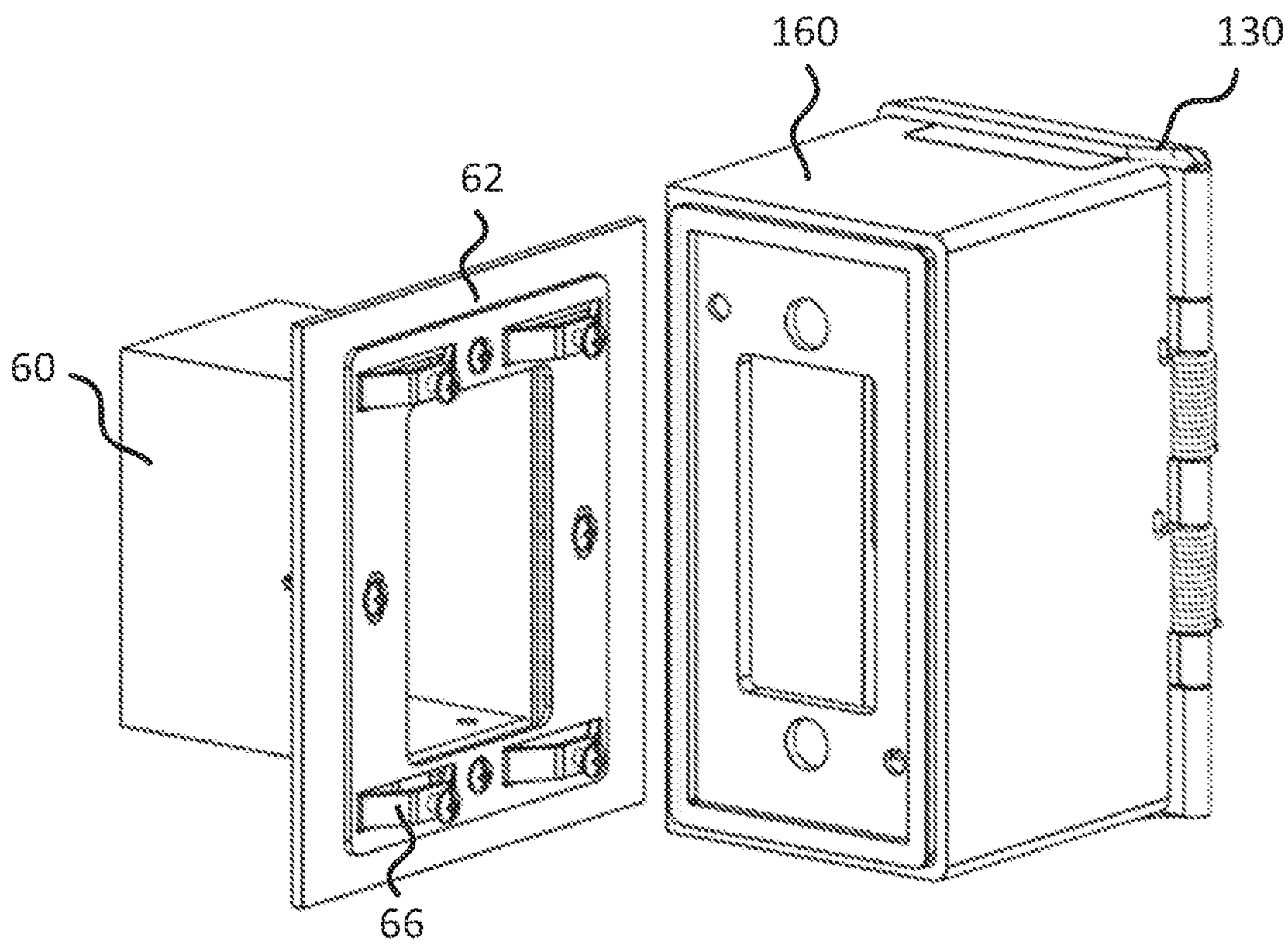

FIG. 16

BACK-TO-BACK TWO-GANG ELECTRICAL BOX

FIELD OF THE INVENTION

The present disclosure relates electrical boxes, and more particularly, to a back-to-back electrical box for indoor and outdoor applications.

BACKGROUND

Various electrical boxes for indoor and outdoor use are known. Electrical boxes can be single gang to accommodate one outlet or switch, or multi-gang to accommodate two or more outlets or switches.

Multi-gang boxes are generally arranged to position outlets or switches side-by-side. For example, the Hubbell HBL985 wall box is a two-gang box for delivering power, data, or AV side-by-side. These wall boxes are typically mounted with the outlets or switches facing outward from a wall. When outlets are side-by-side, one outlet may be blocked when an oversized plug is used. Further, it may be difficult to use outlets facing outward from a wall when they are located behind furniture or in tight spaces.

Some devices exist for mounting outlets on outdoor posts, however, most only accommodate single outlets our side-by-side outlets, such as B-K Lighting Receptacle Bollards and Legrand Outdoor Charging Stations. U.S. Pat. No. 7,234,670, assigned to Arlington Industries, describes one post that allows for outlets to be mounted opposite one another. However, the post is limited in its applications and cannot be mounted in different configurations.

The present invention solves these and other problems in the prior art.

SUMMARY

An object of the present invention is to provide an improved electrical box having a variety of electrical and data interface devices (i.e., outlets/receptacles, switches, etc.) positioned on opposite sides. A further object of the present invention is to provide an improved electrical box which can be mounted both vertically and horizontally.

In one exemplary embodiment according the present disclosure, an electrical box is provided including a central housing with a first side opening, a second side opening opposite the first side opening, and a rear opening, each of the first and second side openings configured to receive an electrical or data interface device, a first extension compartment around the first side opening, the first extension compartment including a first door, and a second extension compartment around the second side opening, the second extension compartment including a second door. In some embodiments, an exterior cover extends at least partially over the central housing, the first extension compartment, and the second extension compartment.

The first side opening may include a first electrical or data interface device and the second side opening may include a second (e.g., different) electrical or data interface device. In some embodiments, the first interface device is a high voltage electrical outlet or switch, and the second interface device is a low voltage data or audio/visual (AV) outlet.

The electrical box may have a rear side including the rear opening and a front side opposite the rear side, wherein the rear opening is configured to attach to a mount box. In some embodiments, each of the first and second doors are hingedly attached to edges of the front side. The mount box

may be a multi-gang box or a single-gang mount box. When a single-gang mount box is used, the electrical box may include a mud ring at least partially closing the rear opening of the central housing around an opening of the single-gang mount box.

In some embodiments, the central housing includes a slot extending therethrough on the front side. A barrier may be positioned in the slot extending through the central housing and at least partially into the mount box. In some embodiments, the mount box is mounted in a wall and the electrical box is mounted against the wall. In some embodiments, the mount box is mounted on a top of a pedestal, and the electrical box is mounted against the top of the pedestal.

In another exemplary embodiment according the present disclosure, an electrical box is provided including a central housing with a first side opening, a second side opening opposite the first side opening, and a rear opening configured to attach to a mount box, each of the first and second side openings configured to receive an electrical or data interface device, a recess on a front side of the central housing including holes to receive fasteners for attaching the central housing to the mount box, and a slot in the recess extending into the central housing.

In some embodiments, a barrier extends through the slot and the rear opening at least partially into the mount box. A removable cover may be positioned within the recess.

The electrical box according to embodiments of the present disclosure is adapted to accommodate dual voltage and can be mounted in a vertical orientation (e.g., wall mounting) or a horizontal orientation (e.g., on a pedestal) on a standard single or two gang boxes. The electrical box is particularly suitable for outdoor applications, such as outside a home or business or in an outdoor recreational area such as a beach or park. For example, the electrical box may be mounted in the horizontal orientation in an outdoor recreational area or other public space for charging devices. The electrical box has indoor applications as well. For example, the electrical box can be used indoors for receptacles which are located behind beds to comply with NEC requirements (e.g., Article 210-60(b) of NEC 2014), such as in health care facilities. With the electrical box disclosed herein, a bed can be up against the box and the plug/receptacle connection is protected.

The electrical box according to the present disclosure provides consumers with the capability of installing multi-voltage devices with a provided barrier (e.g., mounted to Hubbell's two-gang box HBL985) or with single voltage devices where no barrier is required. If one power output is blocked by an oversize plug, the box provides consumers additional opportunity to use another side. In some embodiments, the electrical box includes a mud ring for power distribution applications.

BRIEF DESCRIPTION OF THE DRAWINGS

A more complete appreciation of the present disclosure and many of the attendant advantages thereof will be readily obtained as the same becomes better understood by reference to the following detailed description when considered in connection with the accompanying drawings, wherein:

FIG. **1** is an isometric view of an electrical box according to an exemplary embodiment of the present disclosure mounted to a two-gang box;

FIG. **2** is a top view of the electrical box shown in FIG. **1**;

FIG. **3** is a front view of the electrical box shown in FIG. **1**;

FIG. **4** is an isometric view of the electrical box shown in FIG. **1** with a first door in an open position;

FIGS. **5**A and **5**B are side views of the electrical box shown in FIG. **1** with first and second doors in open positions;

FIG. **6** is an isometric view of an electrical box according to an exemplary embodiment of the present disclosure mounted in a vertical configuration on a wall;

FIG. **7** is an isometric view of an electrical box according to an exemplary embodiment of the present disclosure mounted in a horizontal configuration on a pedestal;

FIG. **8**A is an isometric view of an electrical box according to an exemplary embodiment of the present disclosure mounted to a two-gang box with an exterior cover removed;

FIG. **8**B is a front view of the electrical box shown in FIG. **8**A with a slot cover removed;

FIG. **9** is an isometric view of the electrical box shown in FIGS. **8**A-**8**B with a first extension compartment removed;

FIG. **10** is an isometric view of the electrical box shown in FIG. **9** with a central housing removed;

FIG. **11** is a rear isometric view of a central housing of an electrical box according to an exemplary embodiment of the present disclosure mounted to a two-gang box;

FIG. **12** is an exploded view of the central housing and the two-gang box shown in FIG. **11**;

FIG. **13** is a top view of an electrical box according to an exemplary embodiment of the present disclosure mounted to a single-gang box;

FIG. **14** is a rear isometric view of the electrical box shown in FIG. **13**;

FIG. **15** is an isometric view of the electrical box shown in FIG. **13** with an exterior cover and a first extension compartment removed; and

FIG. **16** is an isometric view of the electrical box shown in FIG. **15** with a central housing removed.

DETAILED DESCRIPTION

The present disclosure may be understood more readily by reference to the following detailed description of the disclosure taken in connection with the accompanying drawing figures, which form a part of this disclosure. It is to be understood that this disclosure is not limited to the specific devices, methods, conditions, or parameters described and/or shown herein, and that the terminology used herein is for the purpose of describing particular embodiments by way of example only and is not intended to be limiting of the claimed disclosure.

Also, as used in the specification and including the appended claims, the singular forms "a," "an," and "the" include the plural, and reference to a particular numerical value includes at least that particular value, unless the context clearly dictates otherwise. Ranges may be expressed herein as from "about" or "approximately" one particular value and/or to "about" or "approximately" another particular value. When such a range is expressed, another embodiment includes from the one particular value and/or to the other particular value. Similarly, when values are expressed as approximations, by use of the antecedent "about," it will be understood that the particular value forms another embodiment. It is also understood that all spatial references, such as, for example, horizontal, vertical, top, upper, lower, bottom, left and right, are for illustrative purposes only and can be varied within the scope of the disclosure.

FIG. **1** shows an electrical box **100** according to an exemplary embodiment of the present disclosure mounted to a two-gang box **50**. FIGS. **2** and **3** illustrate top and front views of the electrical box **100** shown in FIG. **1**. The electrical box **100** has a rear side adjacent to the box **50**, an opposite front side, and top and bottom sides. In this exemplary embodiment, the two-gang box **50** may be, for example, a Hubbell HBL985 or any other suitable multi-gang (e.g., two-gang) box. A further described below, the electrical box **100** may alternatively be mounted to a single-gang box (see FIGS. **13**-**16**). The box **50** may be secured at least partially within a wall or pedestal.

The electrical box **100** may further include an exterior skin or cover **110**, a first end with first door **120**, and second end opposite the first end with a second door **130**. The cover **110** extends over the front, top, and sides of the electrical box **100**. The cover **110**, and/or the doors **120**,**130** and other components of the electrical box **100**, may be manufactured from a corrosion resistant metal such as aluminum (e.g., cast aluminum), stainless steel or other material suitable for outdoor use, or plastic or metal for indoor use. In some embodiments, the cover **110** can be different colors.

As shown in FIGS. **3** and **4**, the first and second doors **120**,**130** may be hingedly attached to the electrical box **100** and/or cover **110** with hinges including springs **122**,**132** to bias the doors **120**,**130** closed. Preferably the doors **120**,**130** are hinged at an outside edge at the front of the electrical box **100**. Therefore, the doors **120**,**130** open from the wall outward when the electrical box **100** is vertically mounted, or upward from the ground when horizontally mounted, to protect the switch or outlets and the mating plugs or connector devices while in use from the elements.

As shown in FIG. **4**, the electrical box **100** includes a first extension compartment **140** or recessed frame with an interior cavity exposed when the door **120** is opened. The first extension compartment **140** may include cable cutouts **142**,**144** on two or more of its sidewalls to route a cord **152** (having a plug **154**) when the door **120** is fully closed. The electrical box **100** may include plugs **145** that snap into the cutouts **142**,**144** when not in use. A second extension compartment **160** (shown in FIGS. **8**A-**10**) has the same features. The exterior cover **110** may also have corresponding tabs **112** that are removable (e.g., break off) to reveal the cutouts **142**,**144**.

FIG. **5**A is a side view of the first end of the electrical box **100** with the first door **120** in an open position. In the exemplary embodiment, the cavity of the first extension compartment **140** surrounds and encloses a high voltage electrical power outlet **150**. FIG. **5**B is a side view of the second end of the electrical box **100** with the second door **130** in an open position. In the exemplary embodiment, the cavity of the second extension compartment **160** surrounds and encloses a low voltage data or audio/visual (AV) outlet. The outlets shown herein are only exemplary. A variety of electrical and data interface devices may be installed in the electrical box **100**. Examples include, without limitation, high voltage electrical power outlets, electrical switches, data, or audio/visual outlets (e.g., ethernet, coaxial, telephone, HDMI), and combined power and data outlets (e.g., USB, USB-C, etc.).

The electrical box **100** according to an exemplary embodiment of the present disclosure may be mounted in vertical and horizontal configurations. FIG. **6** is an isometric view of the electrical box **100** mounted in a vertical configuration on a wall **200**. The vertical configuration can, for example, be used indoors for receptacles which are located behind beds to comply with NEC requirements, such as in health care facilities. FIG. **7** is an isometric view of the electrical box **100** mounted in a horizontal configuration on top of a pedestal **220**.

FIG. **8**A is an isometric view of the electrical box **100** mounted to a two-gang box **50** with the exterior cover **110** removed to illustrate the internal components. The electrical box **100** includes a central back-to-back housing **180** with a first end and opening and a second opposite end and opening. The central housing **180** is secured to the box **50** with a gasket in between. Extension compartments **140**,**160** are secured over the outlets **150**,**170** and to respective ends of the central housing **180** with gaskets in between.

The central housing **180** may have top and bottom cutouts **181** to reduce material and form a partial backstop on each side for outlets or switches. As shown in FIGS. **8**A and **8**B, the central housing **180** may also include a removable (e.g., snap in) cover **182** to allow access to a recess **189** with fasteners (e.g., four fasteners **183**) for securing the central housing **180** to the box **50**. FIG. **8**B shows the electrical box **100** with the cover **182** removed. Removal of the cover **182** also reveals a vertical slot **185** in the recess **189** for the insertion and inspection of a barrier between the two outlets **150**,**170**. The slot **185** extends into the central housing **180** allowing a barrier to be placed between the first and second side openings of the central housing **180** and out through the rear opening. As one skilled in the art will understand, a barrier is used particularly when the voltages are different between the two outlets **150**,**170**, such as when one outlet **150** is high voltage electrical power and the other outlet **170** is low voltage data or audio/visual (AV).

FIG. **9** is an isometric view of the electrical box **100** shown in FIG. **8**A with the first extension compartment **140** removed and a first side opening **184** of the central housing **180** exposed. The outlet **150** is secured into the first side opening **184** of the central housing **180**. The central housing **180** includes connection mechanisms, such as threaded holes **188** (see FIG. **11**), to receive fasteners **151** (e.g., screws) to attach the outlets **150**,**170**. A gasket **186** is positioned around the first side opening **184** of the central housing **180**.

FIG. **10** is an isometric view of the electrical box **100** shown in FIG. **9** with a central housing **180** removed. The gasket **52** between the central housing **180** and the box **50** is shown. A gasket **186** positioned around a second side opening (opposite the first side opening **184**) of the central housing **180** is also shown. A barrier **54** extends between the first and second outlets **150**,**170** and into the box **50**. The barrier **54** may be inserted and inspected via the slot **185** behind the removable cover **182**.

FIG. **11** is a rear isometric view of the central housing **180** of the electrical box **100** mounted to a two-gang box **50**, with sidewalls of the box **50** removed for clarity. FIG. **12** is an exploded view of the central housing **180** and the two-gang box **50** shown in FIG. **11**. The central housing **180** includes a rear opening engaging with the box **50**. The gasket **52** surrounds the rear opening of the central housing **180**. Each side of the central housing **180** has two or more holes **188** for receiving fasteners **151** to attach the outlet **150** (or other electrical or data interface device). The central housing **180** also includes holes **190** for receiving fasteners to attach the extension compartment **140** to the central housing **180**. There may also be a hole **192** for receiving a grounding fastener.

As discussed above, the electrical box **100** may be mounted to a single or multi-gang boxes. FIG. **13** is a top view of an electrical box **100** according to an exemplary embodiment of the present disclosure mounted to a single-gang box **60**. FIG. **14** is a rear isometric view of the electrical box **100** shown in FIG. **13**.

FIGS. **15** and **16** are isometric views of the electrical box **100** shown in FIG. **13** with portions removed to illustrate the internal components. The same central housing **180** may be used for a single-gang box **60** and secured together with fasteners under a removable cover **182**. A gasket **62** is positioned between the box **60** and the central housing **180**. Further, when a single-gang box **60** is used, an optional mud ring **66** may be provided to close the opening, at least partially, between the box **60** and the rear opening of the central housing **180**.

As shown throughout the drawings, like reference numerals designate like or corresponding parts. While illustrative embodiments of the present disclosure have been described and illustrated above, it should be understood that these are exemplary of the disclosure and are not to be considered as limiting. Additions, deletions, substitutions, and other modifications can be made without departing from the spirit or scope of the present disclosure. Accordingly, the present disclosure is not to be considered as limited by the foregoing description.

What is claimed is:

1. An electrical box, comprising:

a central housing with a first side opening, a second side opening opposite the first side opening, and a rear opening, each of the first and second side openings configured to receive an electrical or data interface device;

a first extension compartment around the first side opening, said first extension compartment including a first door; and

a second extension compartment around the second side opening, said second extension compartment including a second door.

2. The electrical box of claim **1**, further comprising a slot on a front side of the central housing, opposite the rear opening, for inserting and removing a barrier in the central housing between the first side opening and the second side opening.

3. The electrical box of claim **2**, wherein the first extension compartment extends outward from the first side opening a distance greater than a distance between the first side opening and the slot.

4. The electrical box of claim **3**, further comprising a cover removably positioned over the slot.

5. The electrical box of claim **1**, wherein the first side opening includes a first electrical or data interface device and the second side opening includes a second electrical or data interface device, wherein the first electrical or data interface device is a high voltage electrical outlet or switch and the second electrical or data interface device is a low voltage data or audio/visual (AV) outlet.

6. The electrical box of claim **1**, comprising a rear side including the rear opening and a front side opposite the rear side, wherein the rear side is configured to attach to a mount box.

7. The electrical box of claim **6**, wherein each of the first and second doors are hingedly attached to edges of the front side.

8. The electrical box of claim **6**, wherein the mount box is a two-gang mount box.

9. The electrical box of claim **6**, wherein the mount box is a single-gang mount box.

10. The electrical box of claim **9**, further comprising a mud ring at least partially closing the rear opening of said central housing around an opening of the single-gang mount box.

11. The electrical box of claim **6**, wherein the mount box is mounted in a wall, and wherein the electrical box is mounted against the wall.

12. The electrical box of claim **6**, wherein the mount box is mounted on a top of a pedestal, and wherein the electrical box is mounted against the top of the pedestal.

13. The electrical box of claim **1**, wherein at least one of said first and second extension compartments includes a cable cutout on each of at least two sides of the at least one of said first and second extension compartments.

14. The electrical box of claim **13**, wherein the at least one of said first and second extension compartments includes a removable plug closing at least one of the cable cutouts.

15. An electrical box, comprising:

a central housing with a first side opening, a second side opening opposite the first side opening, and a rear opening configured to attach to a mount box, each of the first and second side openings configured to receive an electrical or data interface device; and

a slot extending from a front side of the central housing and through said central housing between the first side opening and the second side opening; and

a barrier configured to extend through the slot and the rear opening at least partially into the mount box.

16. The electrical box of claim **15**, wherein the first side opening includes a first electrical or data interface device and the second side opening includes a second electrical or data interface device, wherein the first electrical or data interface device is a high voltage electrical outlet or switch and the second electrical or data interface device is a low voltage data or audio/visual (AV) outlet.

17. The electrical box of claim **15**, further comprising a removable cover over the slot.

18. The electrical box of claim **15**, further comprising:

a first extension compartment removably attachable to said central housing around the first side opening, said first extension compartment extending outward from the first side opening a distance greater than a distance between the first side opening and the slot, and a second extension compartment removably attachable to said central housing around the second side opening, said second extension compartment extending outward from the second side opening a distance greater than the distance between the second side opening and the slot.

19. The electrical box of claim **18**, further comprising a gasket between each of said first and second extension compartments and said central housing.

* * * * *