US012163529B2

(12) **United States Patent**
Teramoto et al.

(10) **Patent No.: US 12,163,529 B2**
(45) **Date of Patent: Dec. 10, 2024**

(54) **IMPELLER, MULTI-BLADE AIR-SENDING DEVICE, AND AIR-CONDITIONING APPARATUS**

(71) Applicant: **Mitsubishi Electric Corporation**, Tokyo (JP)

(72) Inventors: **Takuya Teramoto**, Tokyo (JP); **Hiroyasu Hayashi**, Tokyo (JP); **Ryo Horie**, Tokyo (JP); **Takashi Yamaguchi**, Tokyo (JP); **Tomohiro Nagano**, Tokyo (JP); **Kazuya Michikami**, Tokyo (JP); **Takahiro Yamatani**, Tokyo (JP); **Hiroshi Tsutsumi**, Tokyo (JP)

(73) Assignee: **Mitsubishi Electric Corporation**, Tokyo (JP)

(*) Notice: Subject to any disclaimer, the term of this patent is extended or adjusted under 35 U.S.C. 154(b) by 97 days.

(21) Appl. No.: **17/794,473**

(22) PCT Filed: **Mar. 19, 2020**

(86) PCT No.: **PCT/JP2020/012324**

§ 371 (c)(1),
(2) Date: **Jul. 21, 2022**

(87) PCT Pub. No.: **WO2021/186676**

PCT Pub. Date: **Sep. 23, 2021**

(65) **Prior Publication Data**

US 2023/0135727 A1 May 4, 2023

(51) **Int. Cl.**

F04D 29/28 (2006.01)
F04D 17/16 (2006.01)
(Continued)

(52) **U.S. Cl.**

CPC ***F04D 29/281*** (2013.01); ***F04D 17/16*** (2013.01); ***F04D 17/162*** (2013.01); ***F04D 25/06*** (2013.01);
(Continued)

(58) **Field of Classification Search**

CPC F04D 29/424; F04D 29/281; F04D 29/282; F04D 29/4226; F04D 17/162;
(Continued)

(56) **References Cited**

U.S. PATENT DOCUMENTS

11,242,864 B2 * 2/2022 Anderson F04D 29/282
2012/0207593 A1 8/2012 Ochiai
2020/0072237 A1 * 3/2020 Anderson F04D 25/166

FOREIGN PATENT DOCUMENTS

DE 10 2016 002 832 A1 9/2017
EP 3 718 799 A1 10/2020
(Continued)

OTHER PUBLICATIONS

International Search Report of the International Searching Authority mailed Jun. 9, 2020 for the corresponding International application No. PCT/JP2020/012324 (and English translation).
(Continued)

Primary Examiner — Peter J Bertheaud
(74) *Attorney, Agent, or Firm* — Posz Law Group, PLC

(57) **ABSTRACT**

An impeller connected to a motor having a drive shaft includes a back plate having a boss having a shaft hole through which the drive shaft is inserted, a ring-shaped rim provided to face the back plate, and a plurality of blades connected to the back plate and the rim and arranged along a circumferential direction of the back plate about the rotation shaft. The back plate includes a first surface portion on which the plurality of blades are formed, a second surface portion provided at a region between the boss and the first
(Continued)

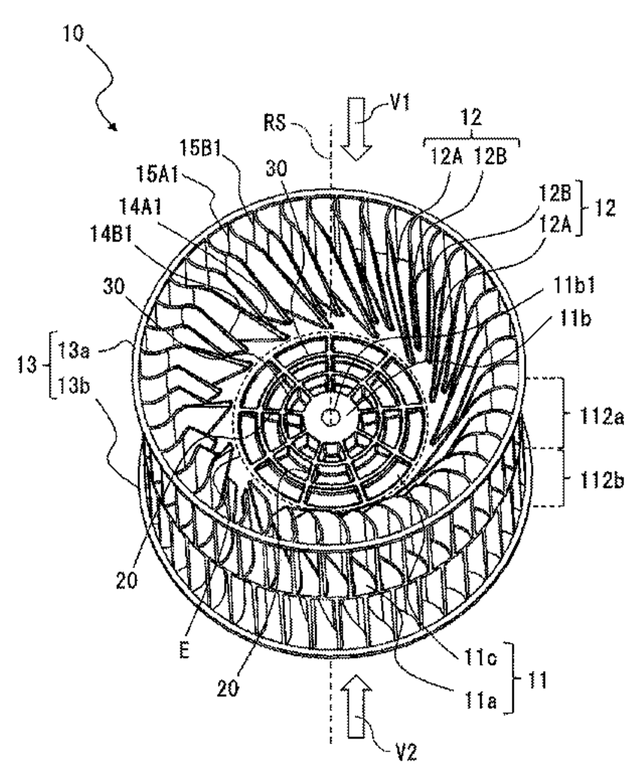

surface portion and depressed from the first surface portion in an axial direction of the rotation shaft, and a plurality of projections provided at the second surface portion and extending in the axial direction.

25 Claims, 28 Drawing Sheets

(51) **Int. Cl.**

F04D 25/06	(2006.01)
F04D 29/30	(2006.01)
F04D 29/42	(2006.01)
F04D 29/44	(2006.01)
F04D 29/62	(2006.01)
F24F 1/0022	(2019.01)

(52) **U.S. Cl.**
CPC ***F04D 29/282*** (2013.01); ***F04D 29/283*** (2013.01); ***F04D 29/30*** (2013.01); ***F04D 29/4226*** (2013.01); ***F04D 29/424*** (2013.01); ***F04D 29/441*** (2013.01); ***F04D 29/626*** (2013.01); *F24F 1/0022* (2013.01)

(58) **Field of Classification Search**
CPC F04D 29/30; F04D 29/283; F04D 29/441; F04D 29/626; F04D 17/16; F04D 25/06
See application file for complete search history.

(56) **References Cited**

FOREIGN PATENT DOCUMENTS

JP	S53-116804	U	9/1978
JP	S54-165804	U	11/1979
JP	S59-096397	U	6/1984
JP	2000-240590	A	9/2000
JP	2006-125229	A	5/2006
JP	2012-166658	A	9/2012
WO	2019/188363	A1	10/2019

OTHER PUBLICATIONS

Extended European Search Report dated Mar. 22, 2023 issued in corresponding European Patent Application No. 20925898.7.
Office Action dated Apr. 4, 2023 issued in corresponding JP Patent Application No. 2022-507965 (and English translation).

* cited by examiner

FIG. 1

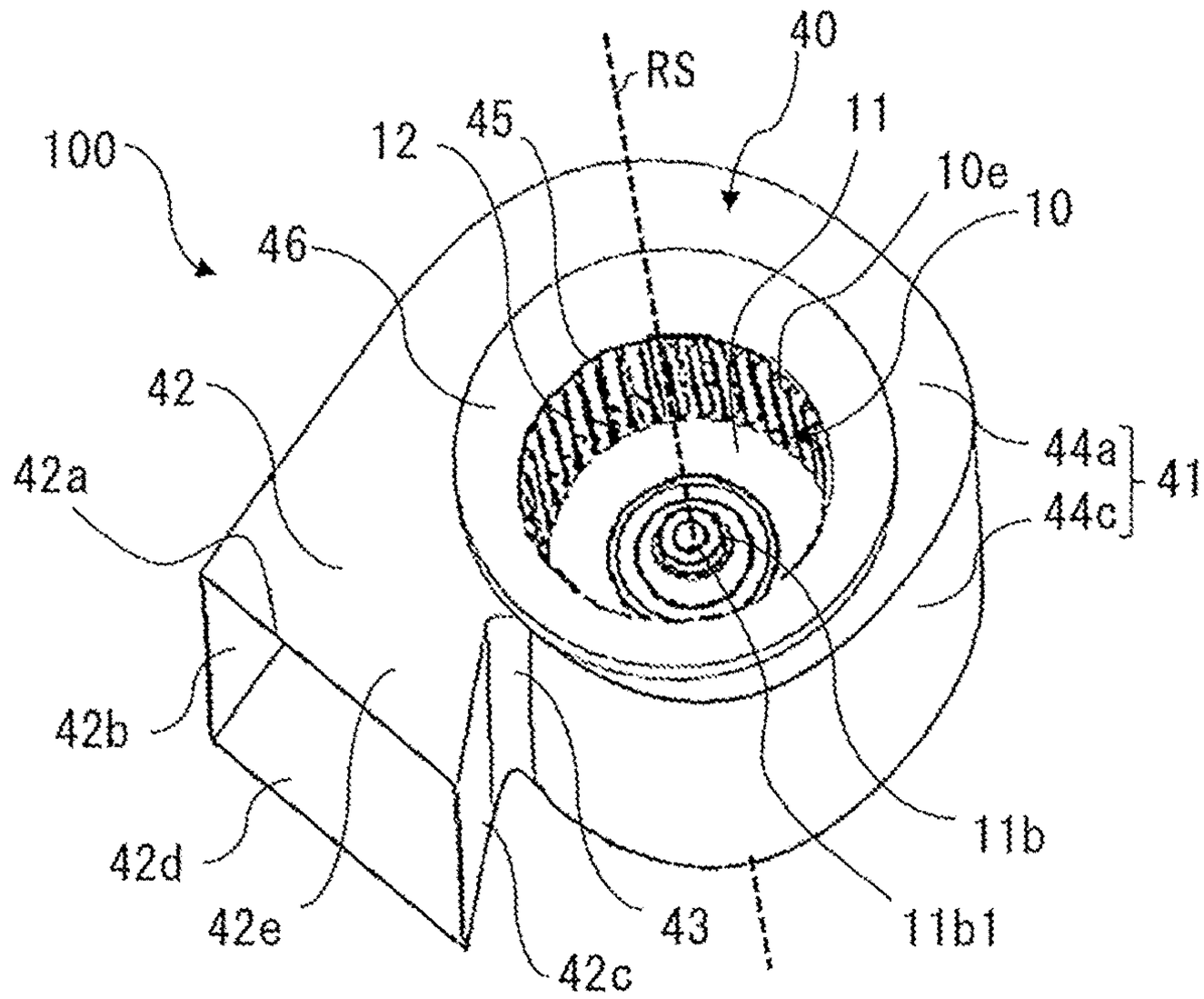
RS
40
100
12
45
11
10e
10
46
42
42a
44a
41
44c
42b
42d
42e
43
42c
11b
11b1

FIG. 2

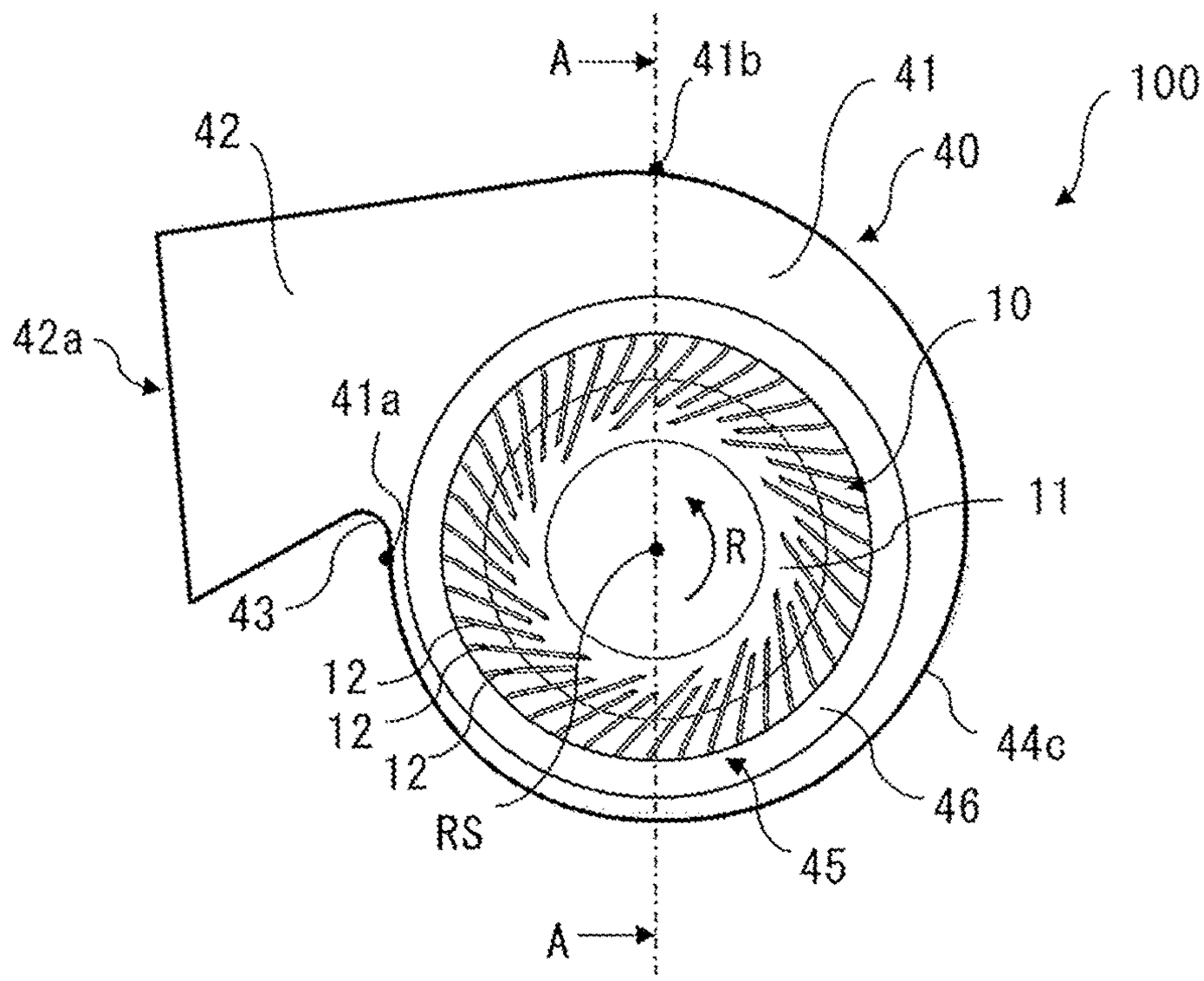
A
41b
41
100
42
40
42a
10
41a
11
R
43
12
12
12
44c
46
RS
45
A

FIG. 3

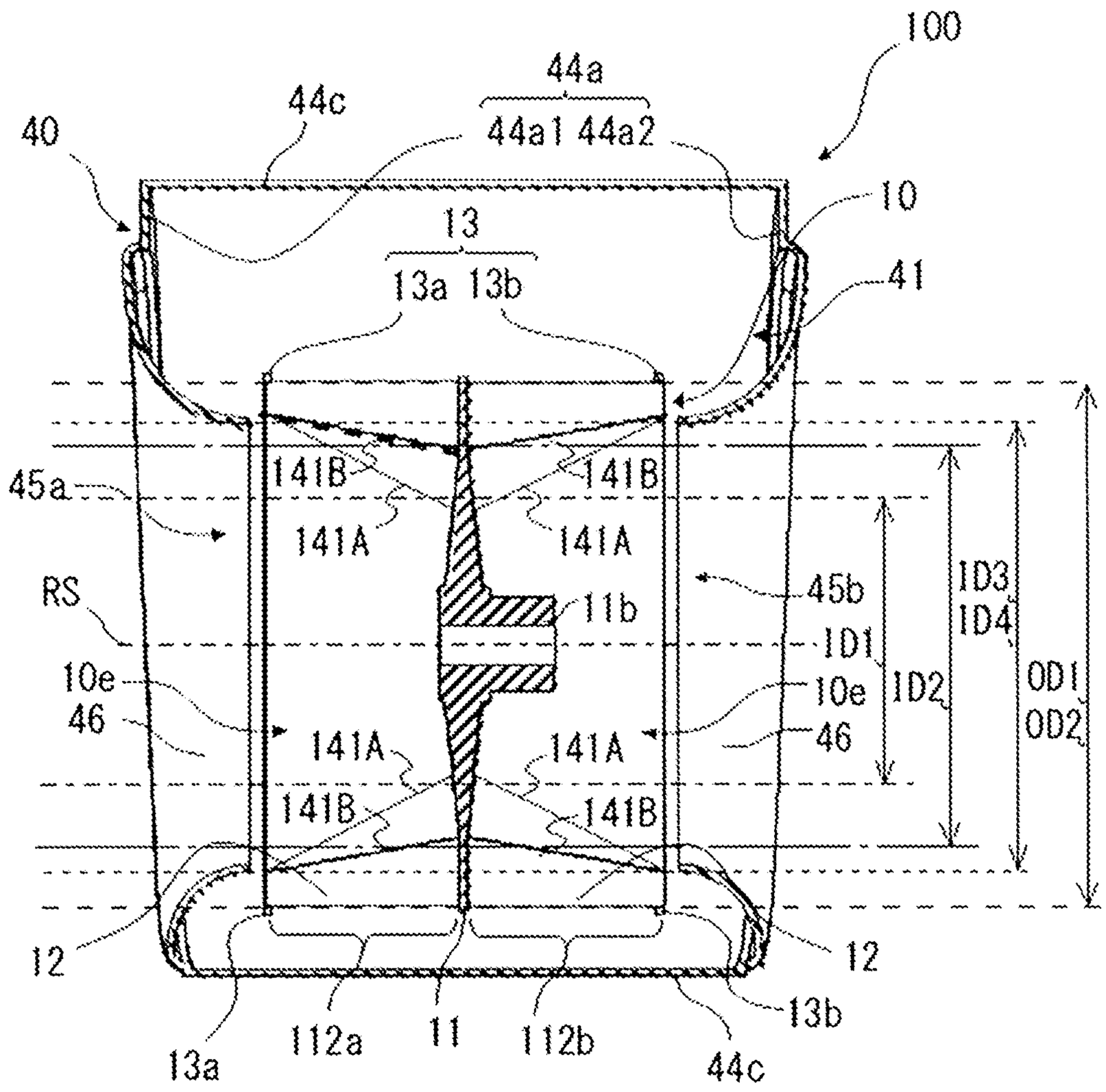
100
44a
44c
44a1 44a2
40
10
13
13a 13b
41
141B
141B
45a
141A
141A
RS
45b
11b
ID3
ID4
ID1
10e
10e
ID2
OD1
OD2
46
46
141A
141A
141B
141B
12
12
13b
13a
112a
11
112b
44c

FIG. 4

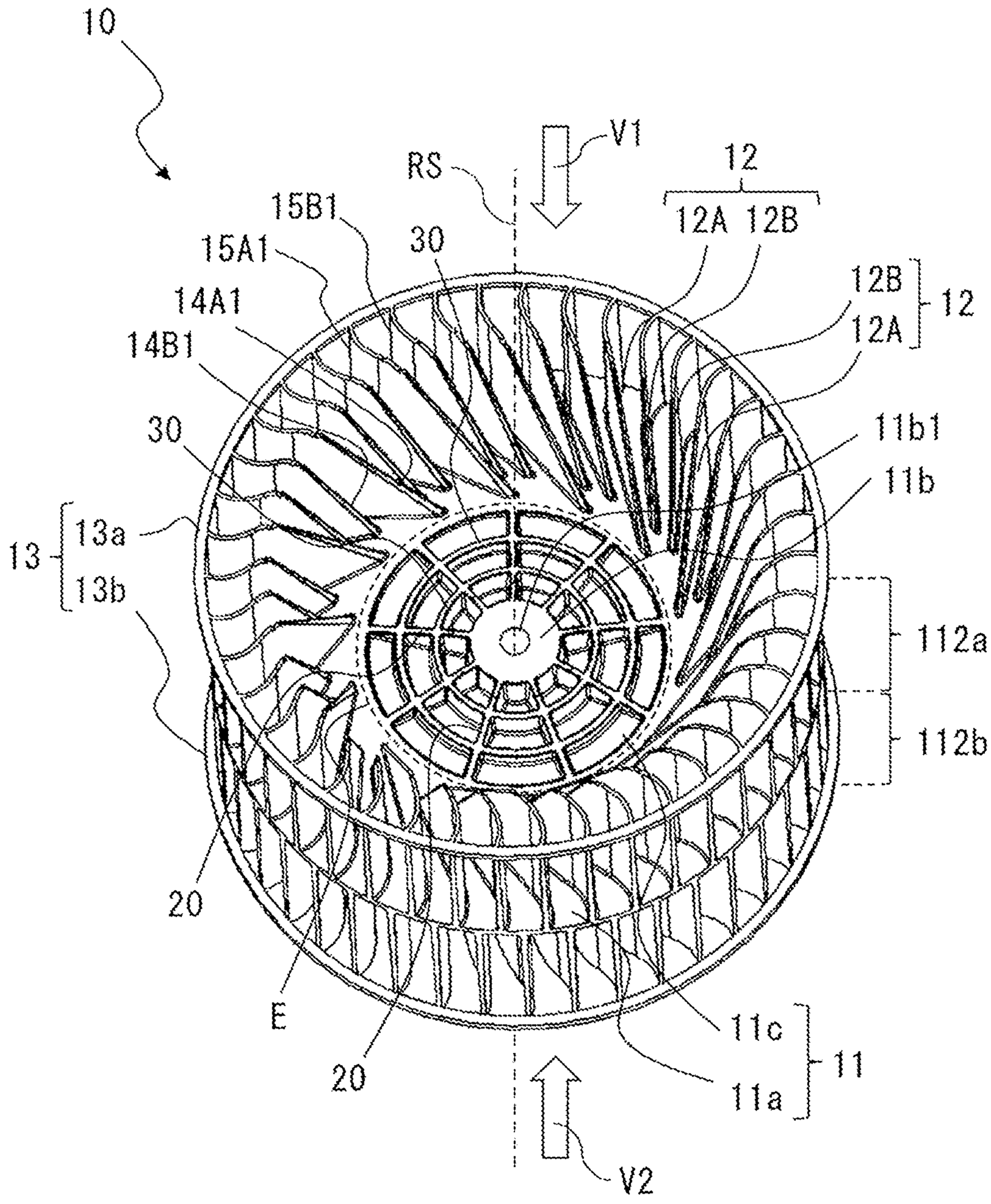
10
V1
RS
12
12A 12B
15B1
30
15A1
14A1
14B1
12B
12A
12
30
11b1
11b
13
13a
13b
112a
112b
20
E
20
11c
11a
11
V2

FIG. 5

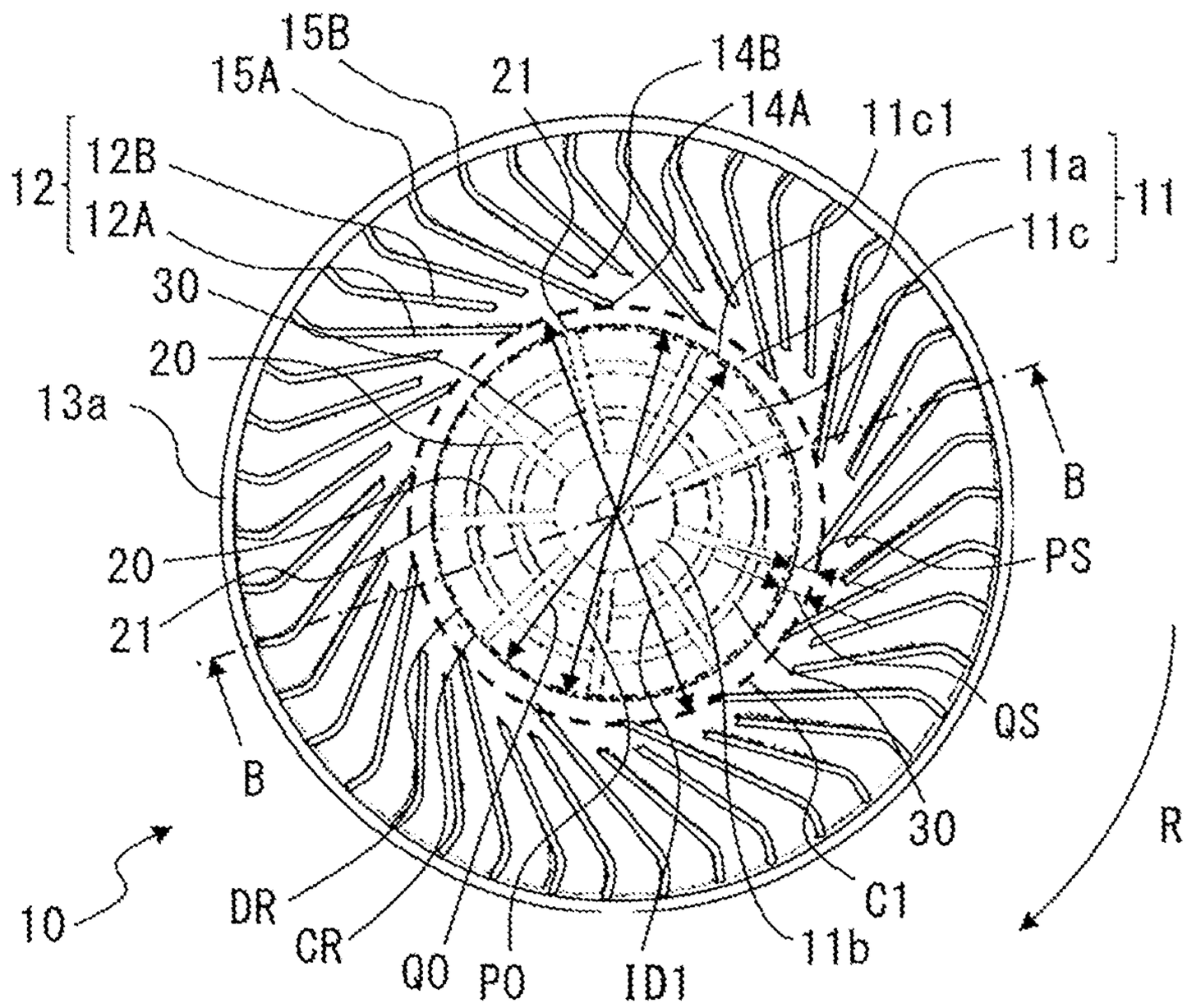
15B
15A
21
14B
14A
11c1
12
12B
12A
11a
11
11c
30
20
13a
B
20
PS
21
QS
B
30
R
10
DR
C1
CR
11b
Q0
P0
ID1

FIG. 6

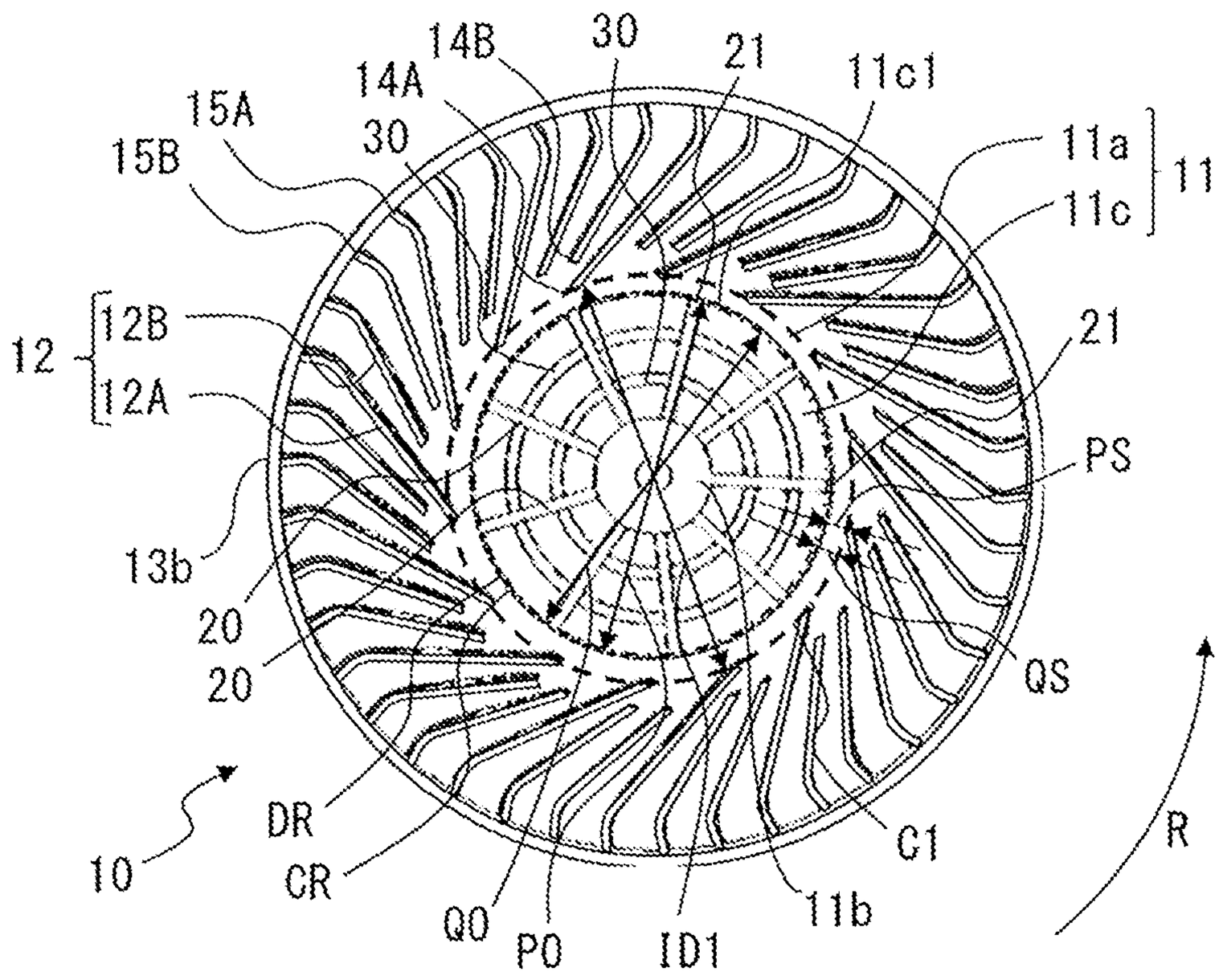
14B
30
21
11c1
14A
15A
30
15B
11a
11
11c
12
12B
12A
21
PS
13b
20
20
QS
DR
10
CR
C1
R
Q0
P0
ID1
11b

FIG. 7

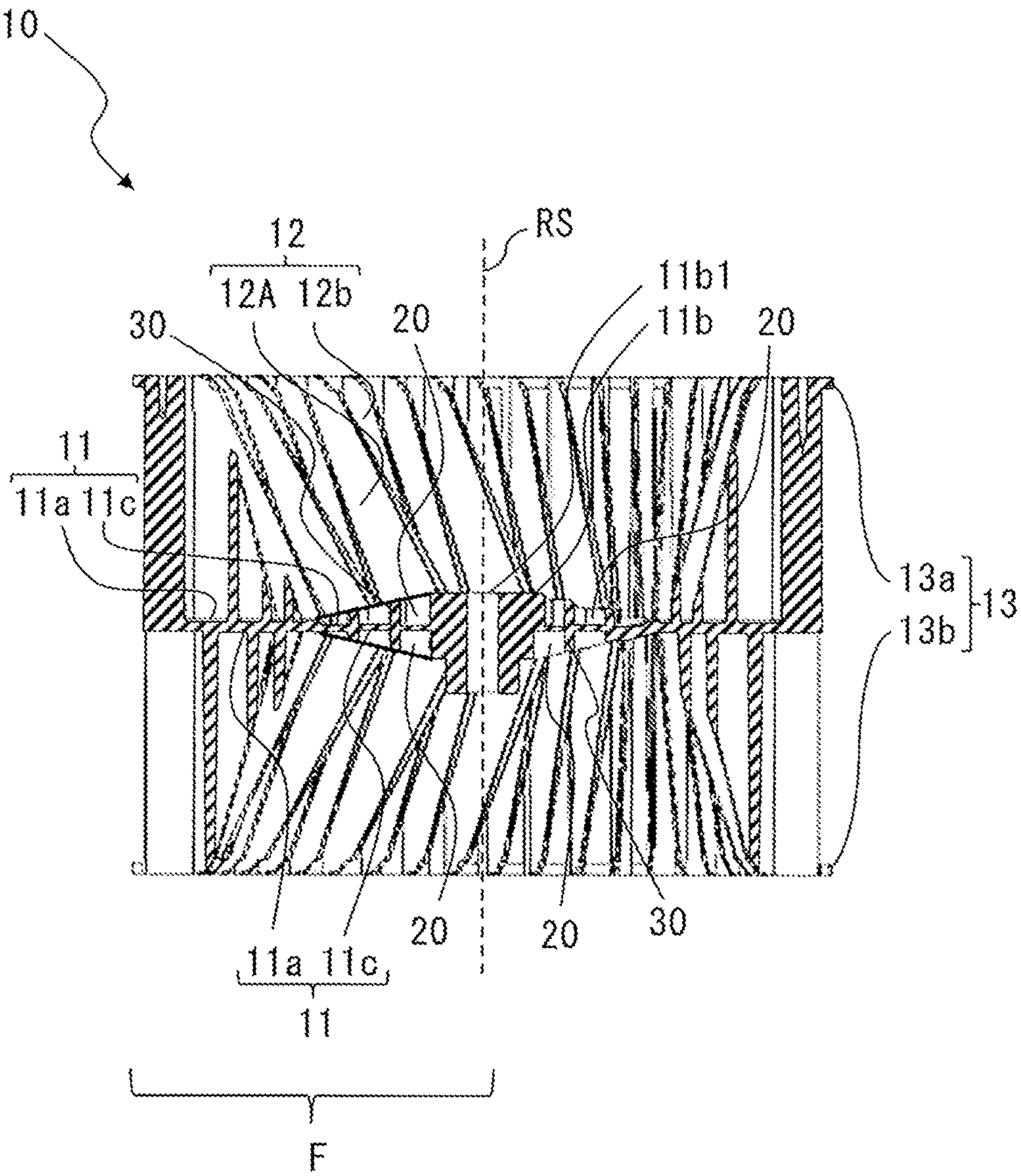
10
12
12A 12b
RS
11b1
11b
20
30
20
11
11a 11c
13a
13
13b
20
20
30
11a 11c
11
F

FIG. 8

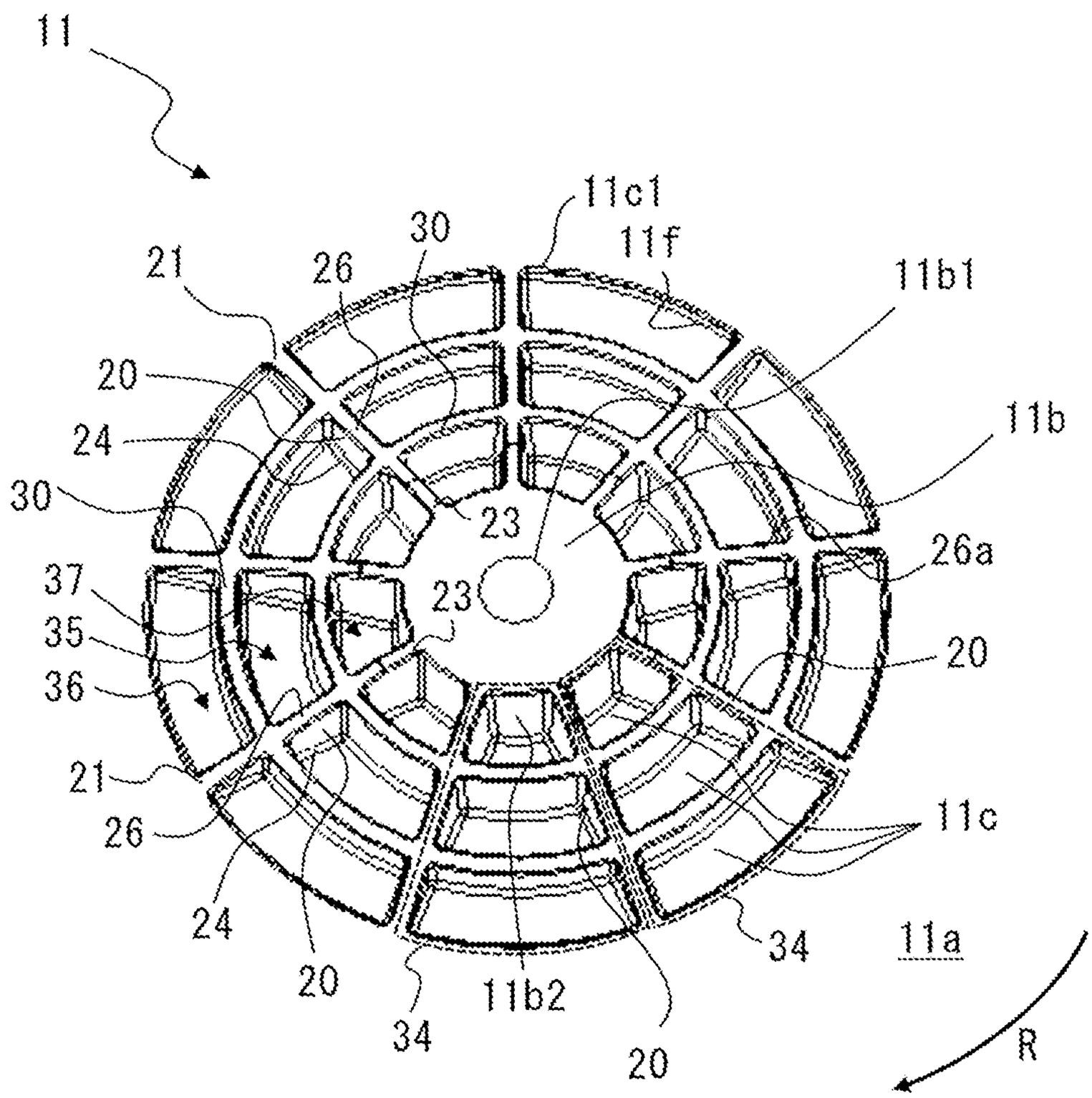
11
11c1
11f
30
21
26
11b1
20
24
11b
30
23
26a
37
23
35
20
36
21
11c
26
24
34
11a
20
11b2
34
20
R

FIG. 9

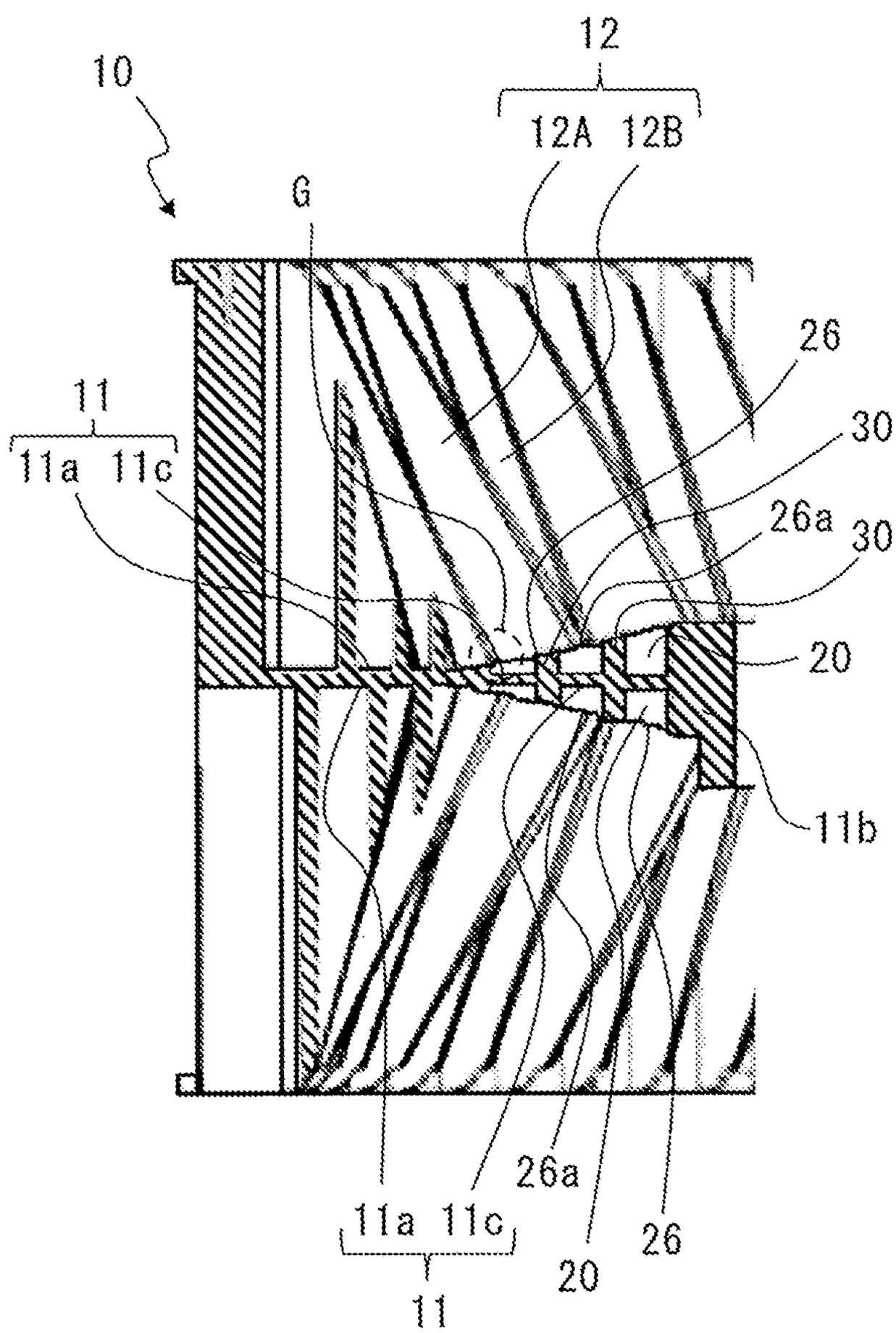

FIG. 10

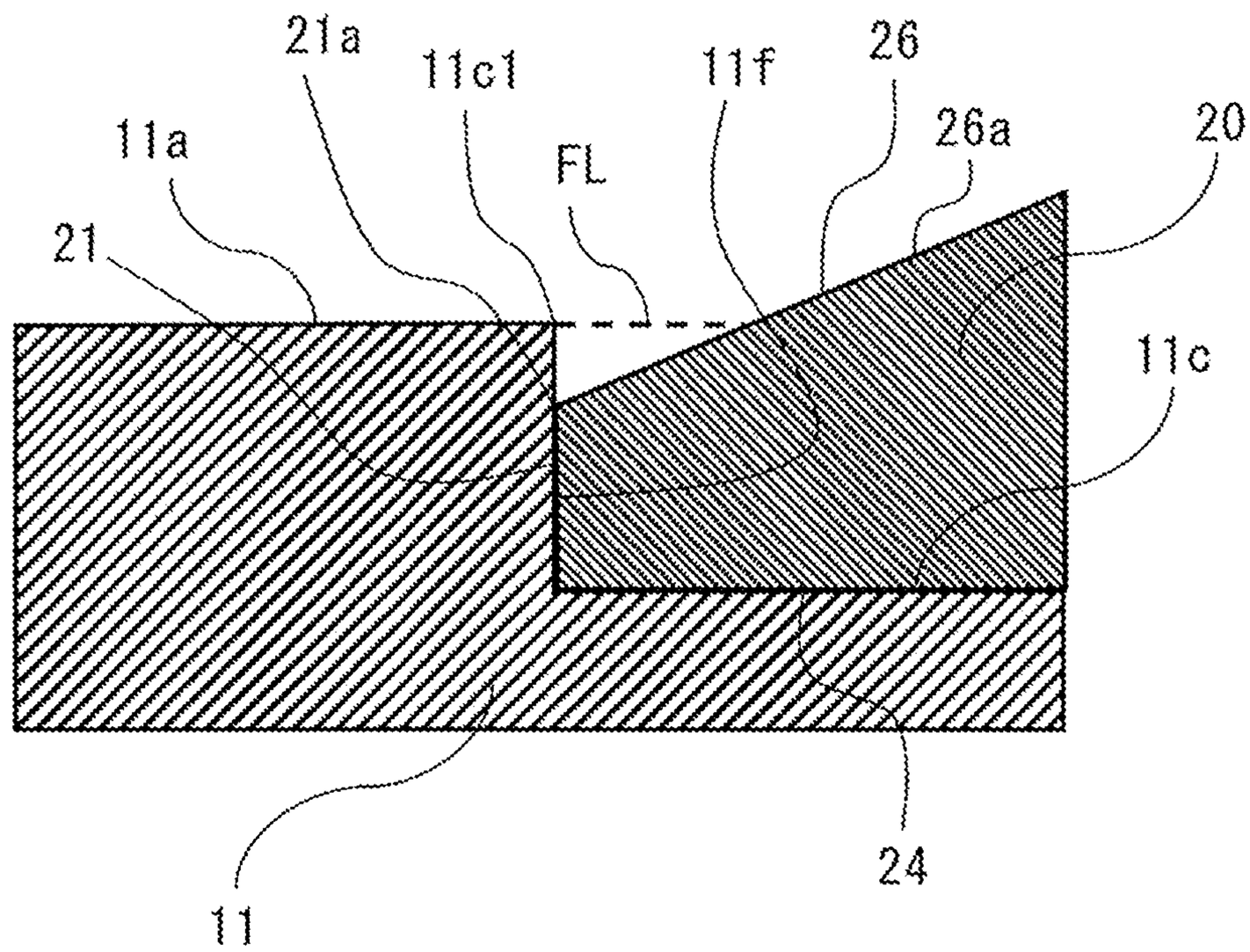

FIG. 11

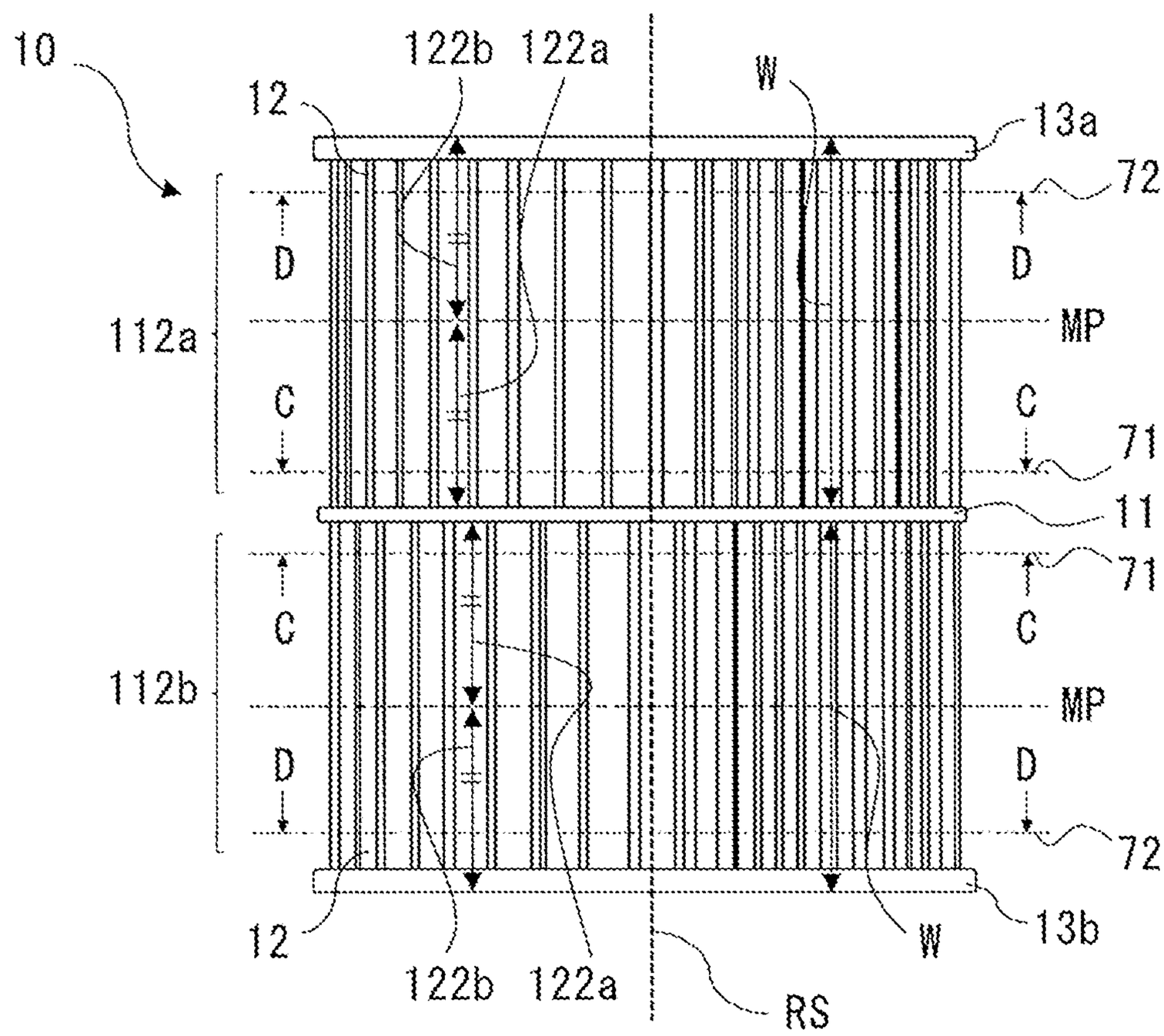
10
122b
122a
W
12
13a
72
D
D
112a
MP
C
C
71
11
71
C
C
112b
MP
D
D
72
12
122b
122a
W
13b
RS

FIG. 12

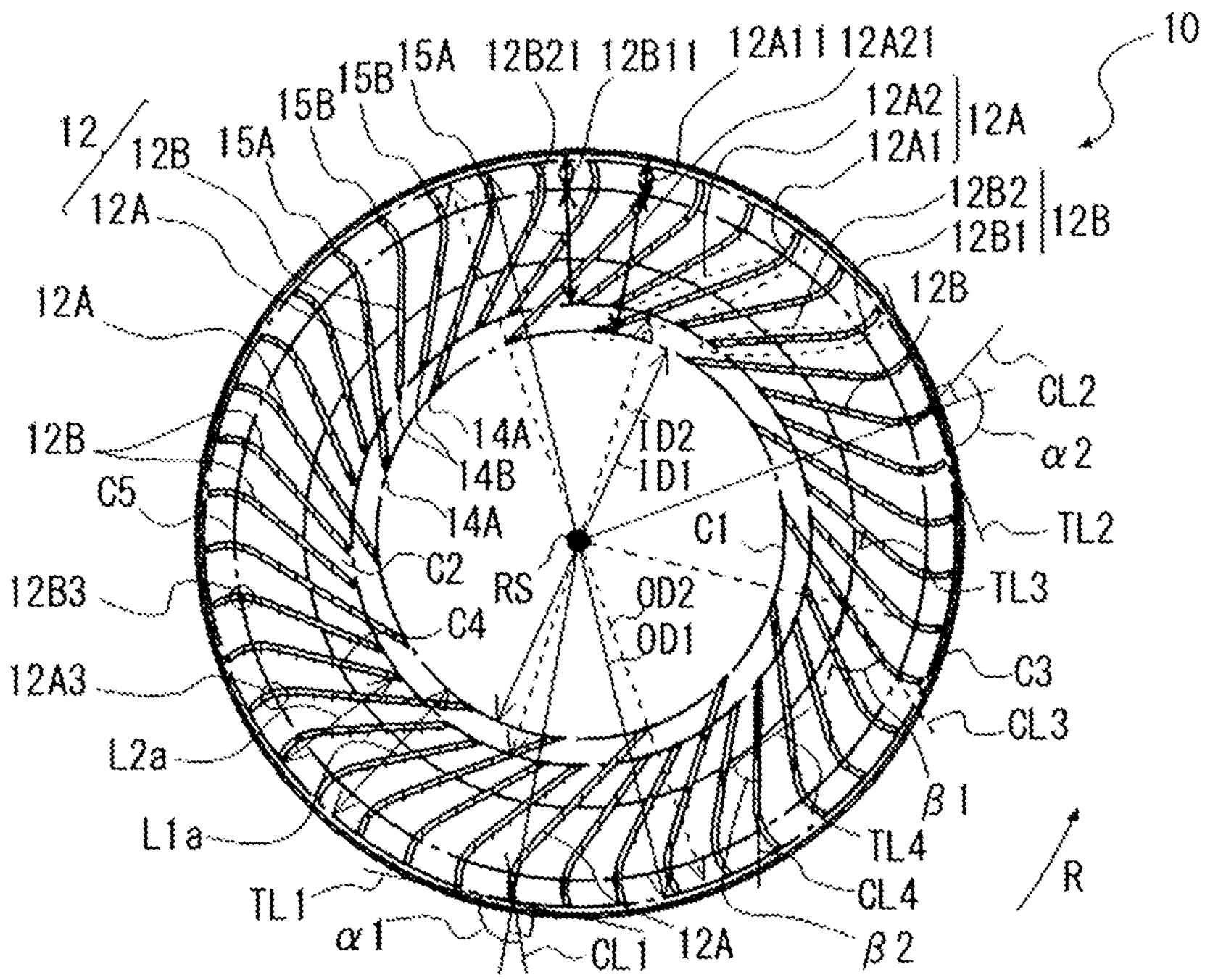
10
12
12B
15A
15B
15B
15A
12B21
12B11
12A11
12A21
12A2
12A1
12A
12B2
12B1
12B
12A
12A
12B
CL2
α2
12B
C5
14A
14B
14A
ID2
ID1
C1
TL2
12B3
C2
RS
OD2
OD1
TL3
C4
12A3
C3
CL3
L2a
β1
L1a
TL4
R
TL1
CL4
α1
CL1
12A
β2

FIG. 13

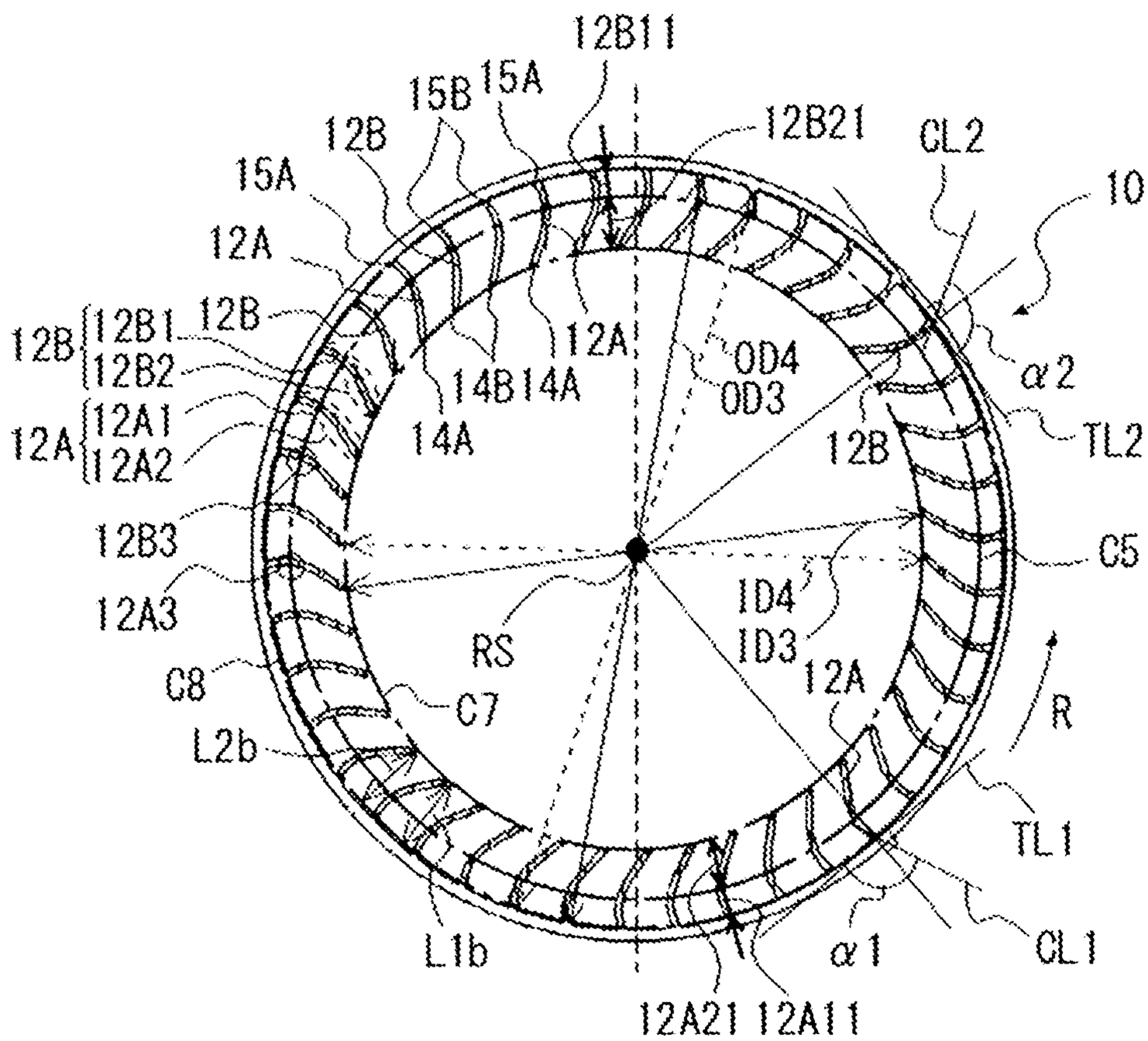
12B11
15B
15A
12B21
CL2
12B
15A
10
12A
12B
12B1
12B2
12A
12A1
12A2
14B
14A
12A
OD4
OD3
α2
TL2
14A
12B
12B3
C5
12A3
ID4
ID3
RS
12A
C8
C7
R
L2b
TL1
L1b
α1
CL1
12A21
12A11

FIG. 14

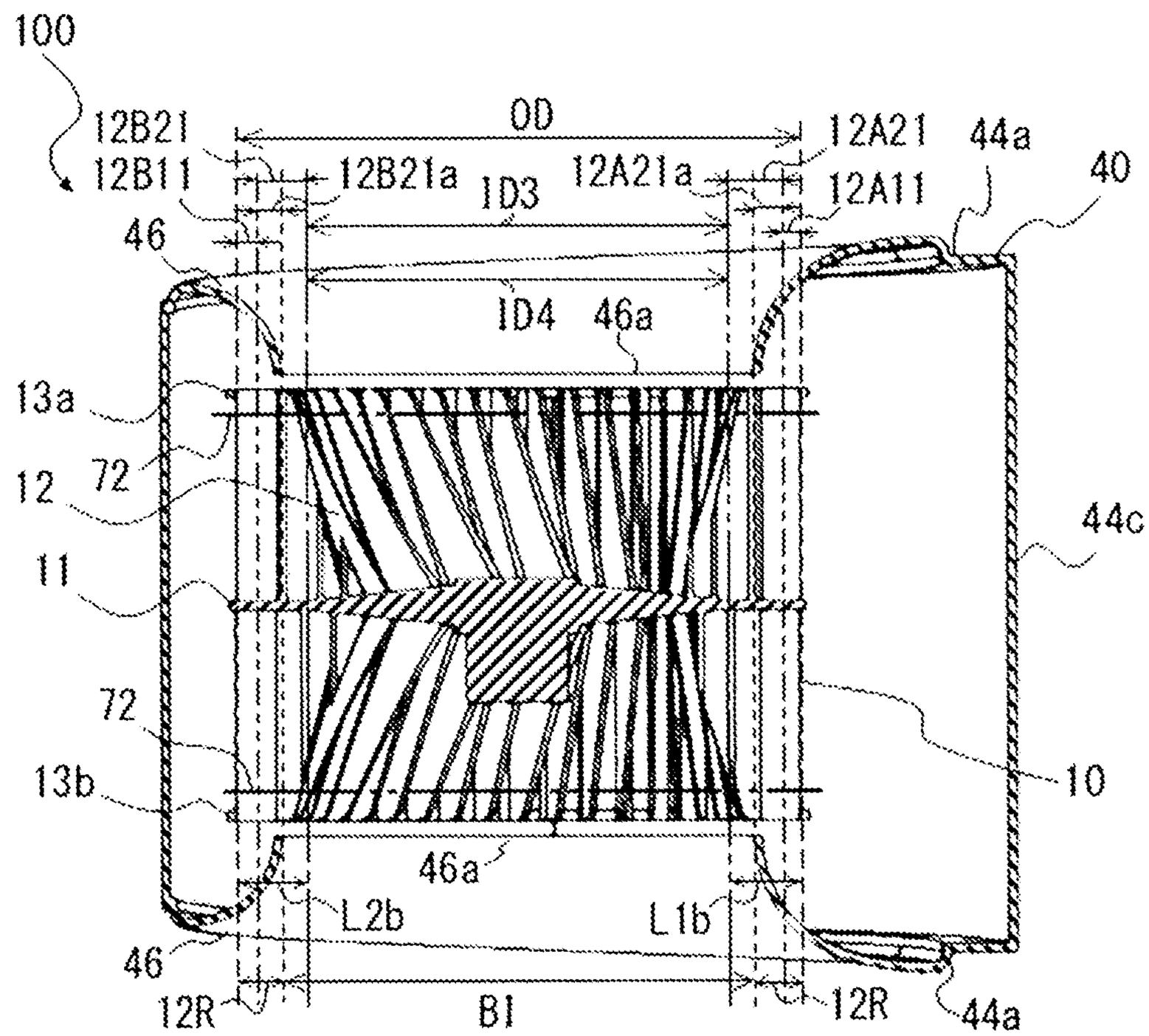
100
12B21
12B11
OD
12A21
44a
40
12B21a
ID3
12A21a
12A11
46
ID4
46a
13a
72
12
44c
11
72
10
13b
46a
L2b
L1b
46
12R
BI
12R
44a

FIG. 15

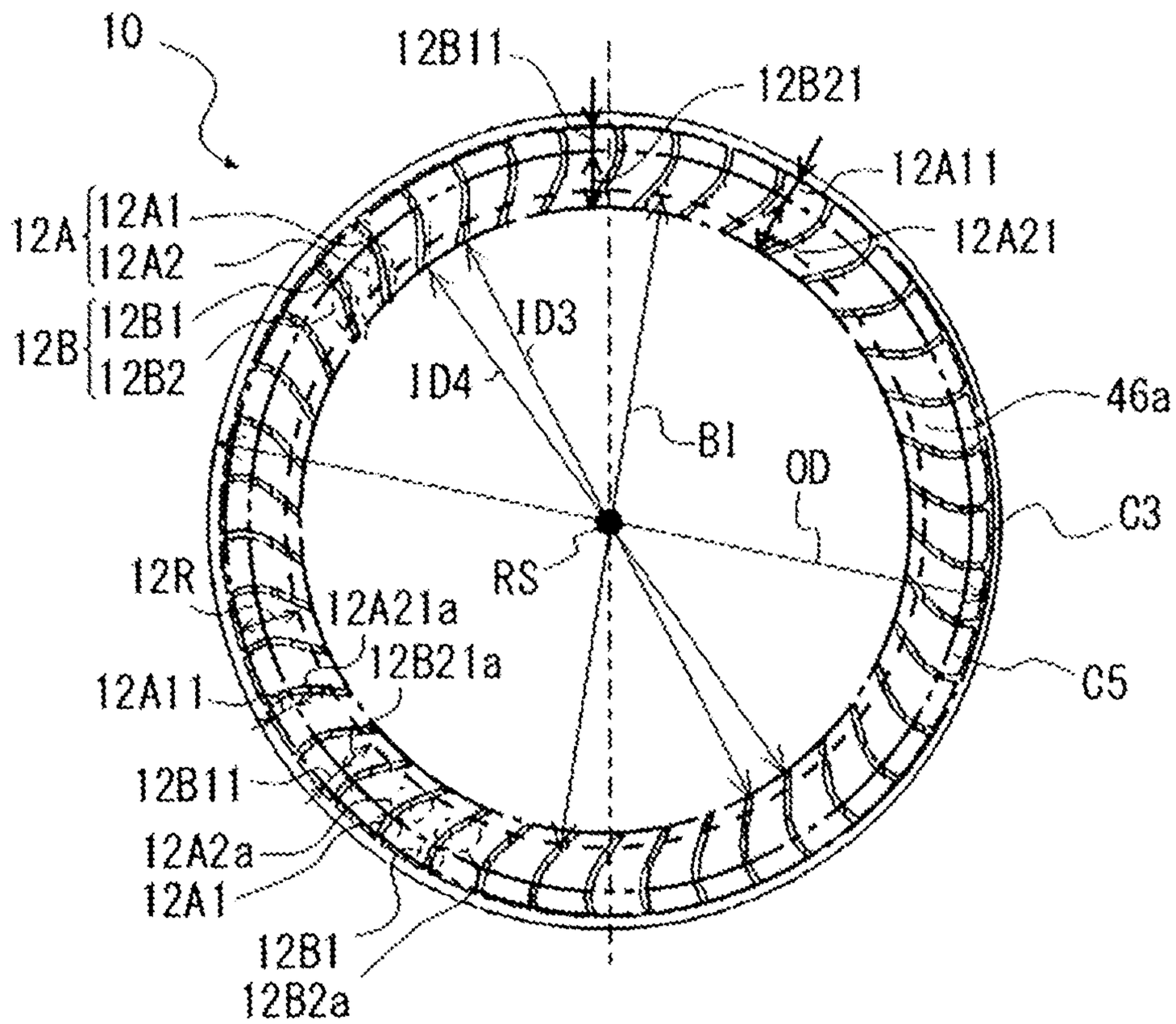
10
12B11
12B21
12A11
12A21
12A
12A1
12A2
12B
12B1
12B2
ID3
ID4
46a
B1
OD
C3
RS
12R
12A21a
12B21a
12A11
C5
12B11
12A2a
12A1
12B1
12B2a

FIG. 16

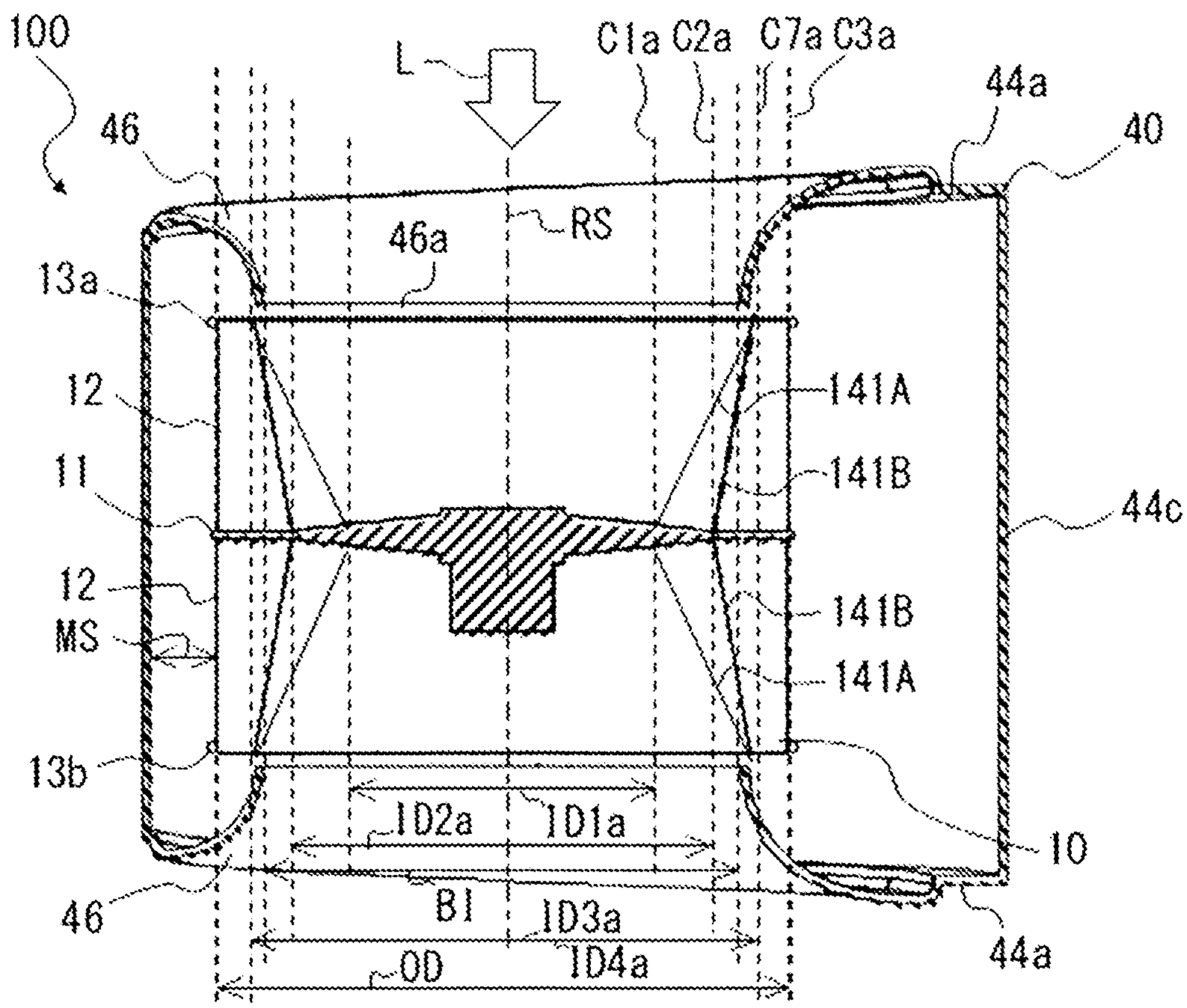
100
L
C1a C2a C7a C3a
44a
40
46
RS
46a
13a
12
141A
11
141B
44c
12
141B
MS
141A
13b
ID2a
ID1a
10
46
BI
ID3a
44a
OD
ID4a

FIG. 17

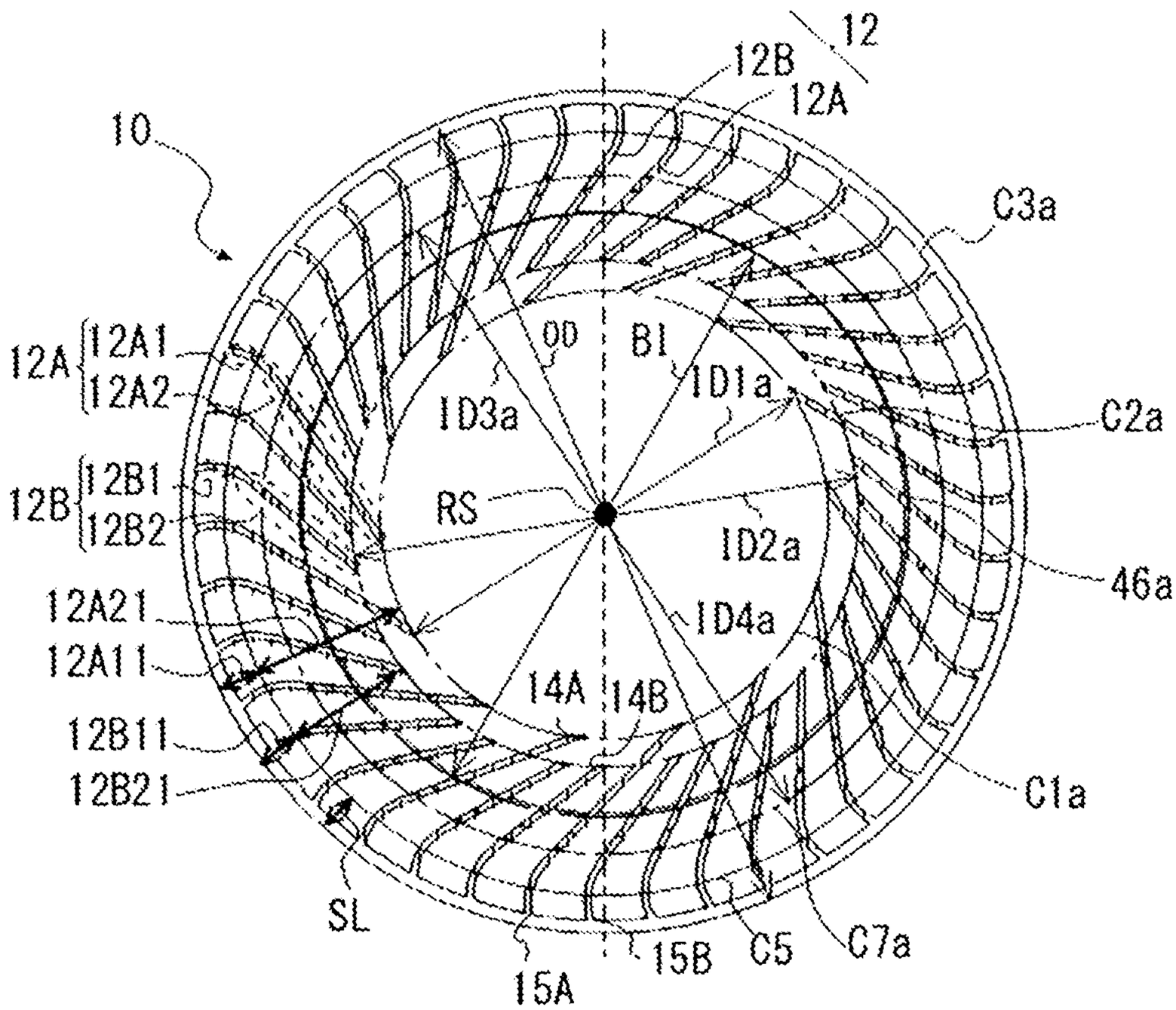
12
12B
12A
10
C3a
12A
12A1
12A2
OD
BI
ID1a
ID3a
C2a
12B
12B1
12B2
RS
ID2a
46a
12A21
ID4a
12A11
14A
14B
12B11
12B21
C1a
SL
15B
C5
C7a
15A

FIG. 18

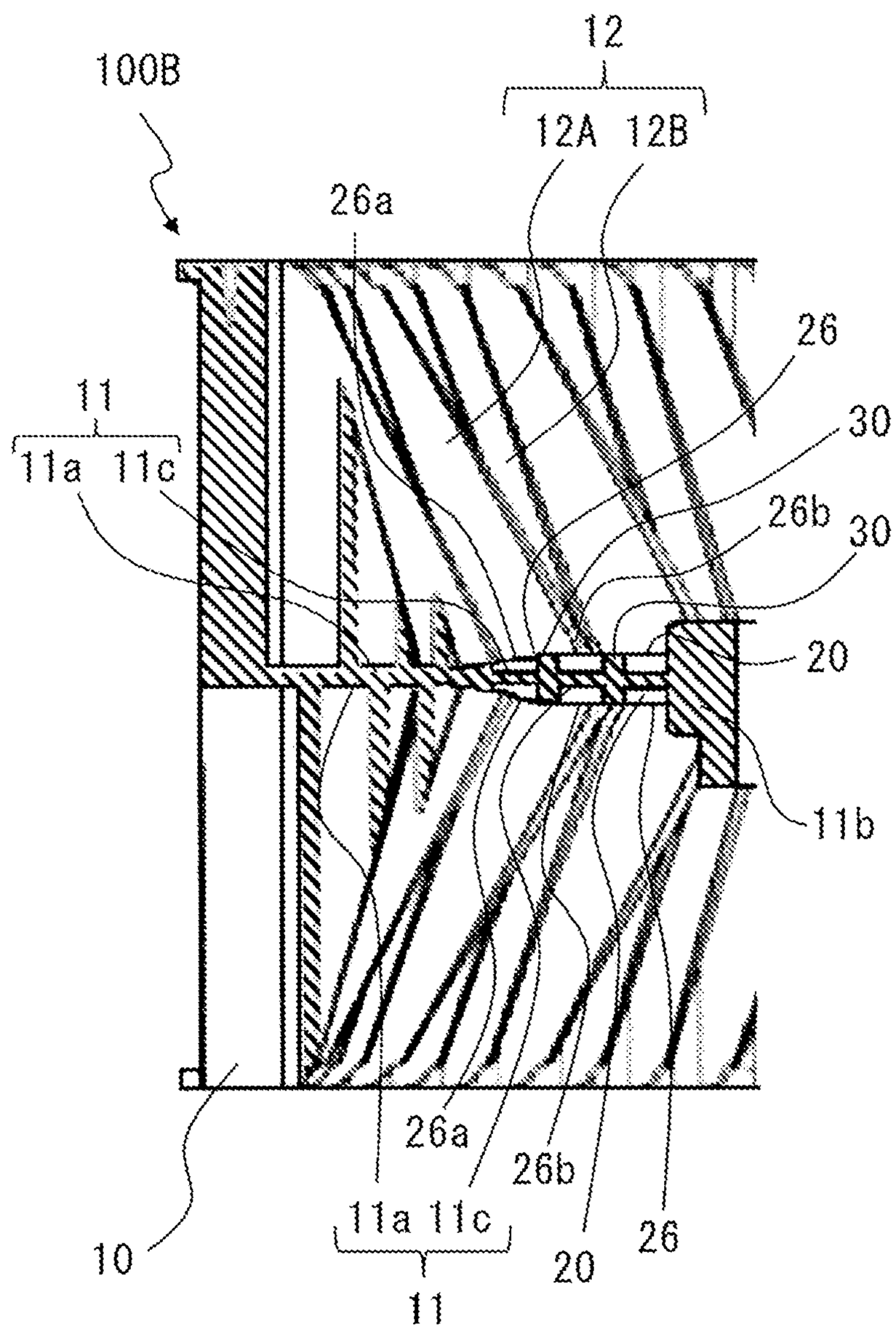
100B
12
12A 12B
26a
26
30
11
11a 11c
26b
30
20
11b
26a
26b
10
11a 11c
20
26
11

FIG. 19

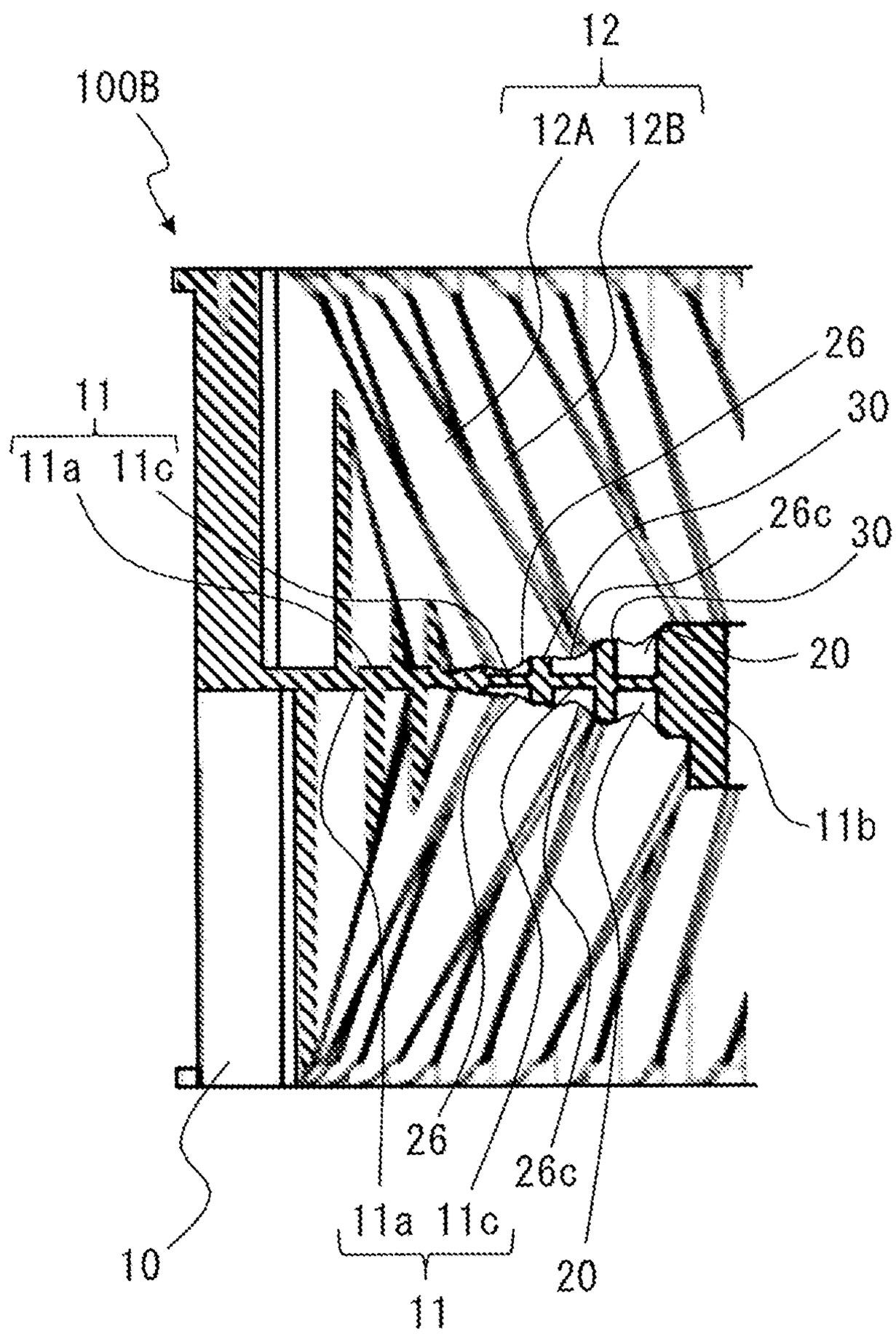
12
100B
12A 12B
26
11
30
11a 11c
26c
30
20
11b
26
26c
11a 11c
10
20
11

FIG. 20

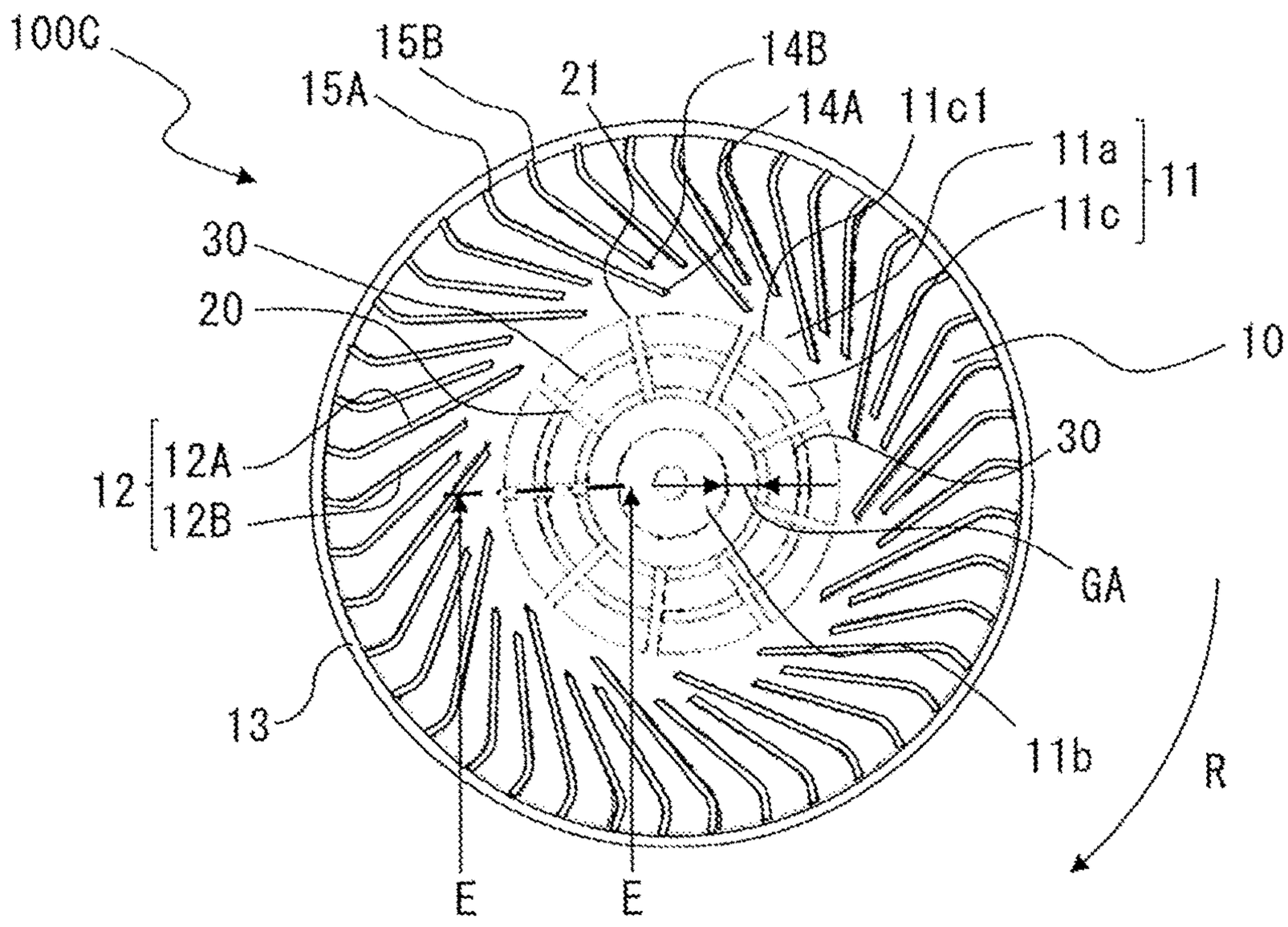
100C
15B
15A
21
14B
14A
11c1
11a
11
11c
30
20
10
12
12A
12B
30
GA
13
11b
R
E
E

FIG. 21

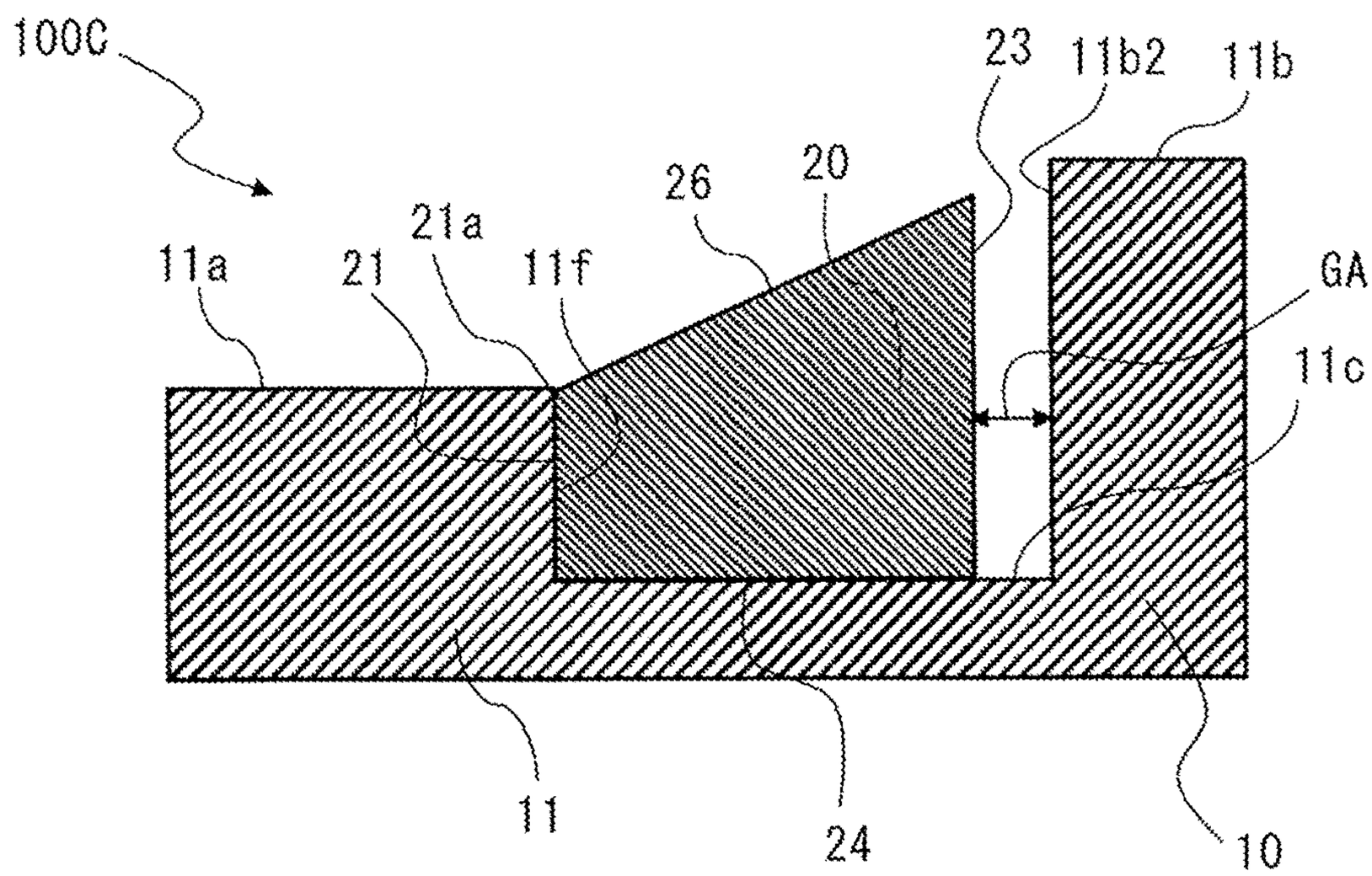
100C
23
11b2
11b
26
20
21a
11a
21
11f
GA
11c
11
24
10

FIG. 22

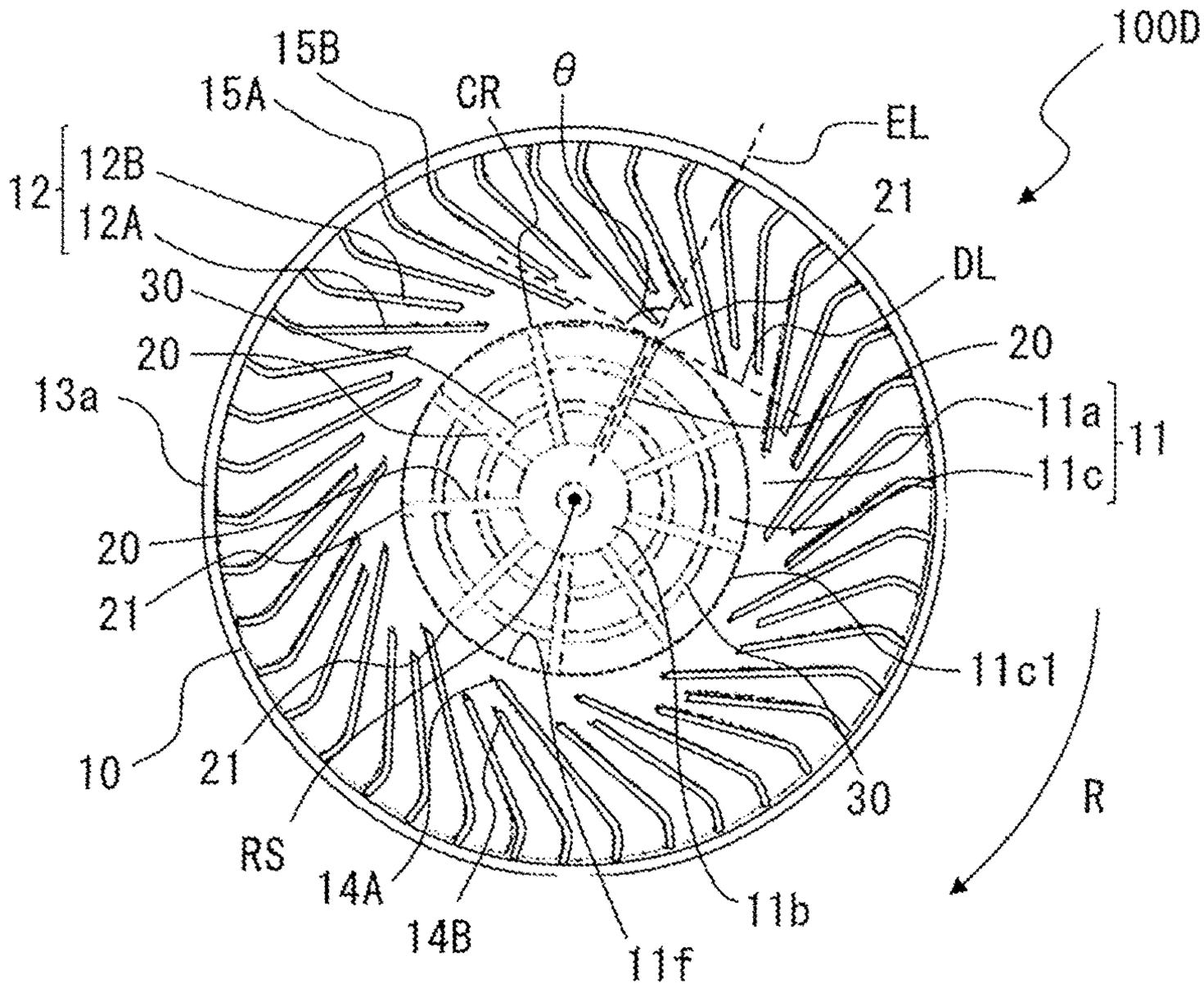
100D
15B
15A
CR
θ
EL
12
12B
12A
21
DL
30
20
20
13a
11a
11
11c
20
21
11c1
10
21
30
R
RS
14A
14B
11b
11f

FIG. 23

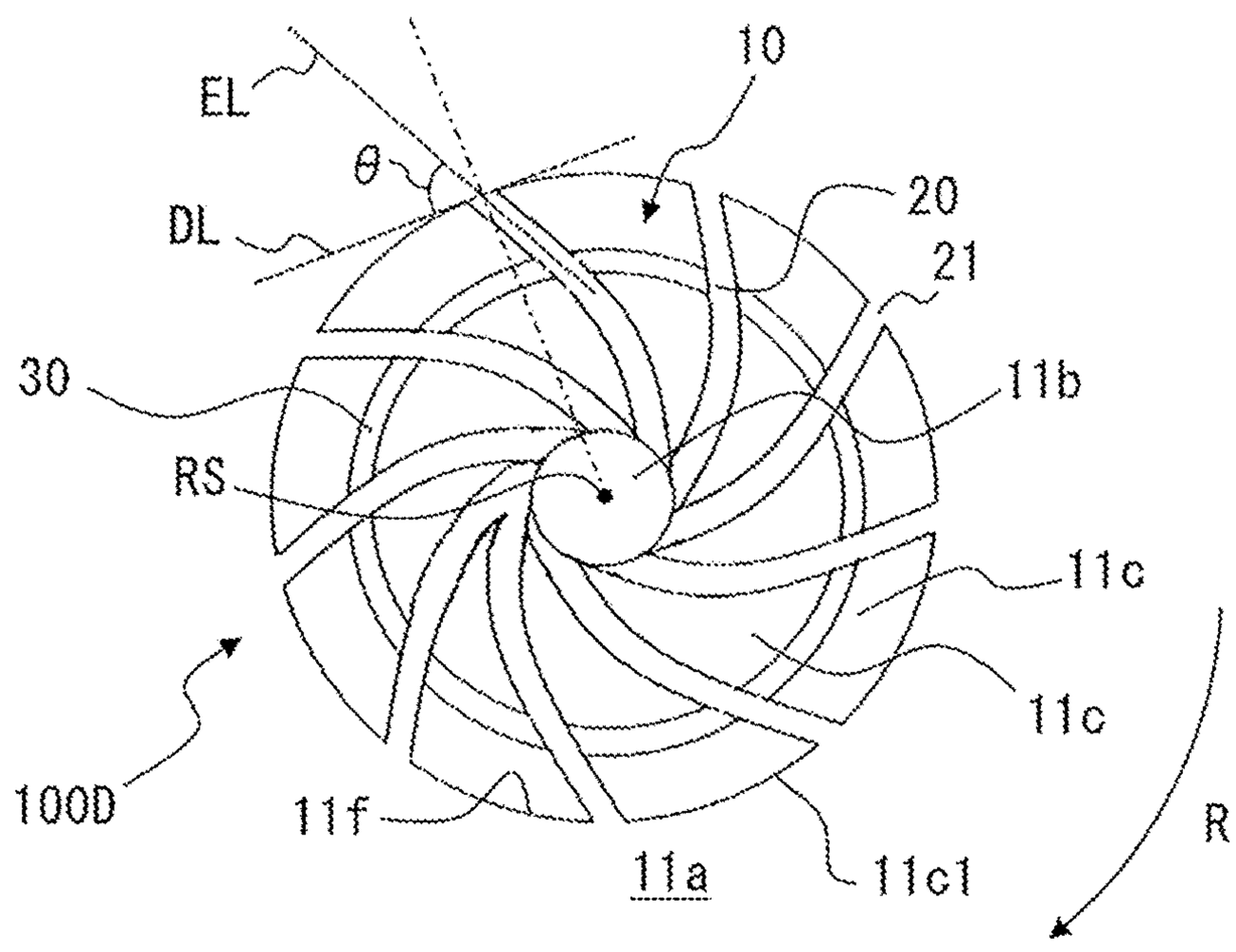
10
EL
θ
20
DL
21
30
11b
RS
11c
11c
100D
11f
R
11a
11c1

FIG. 24

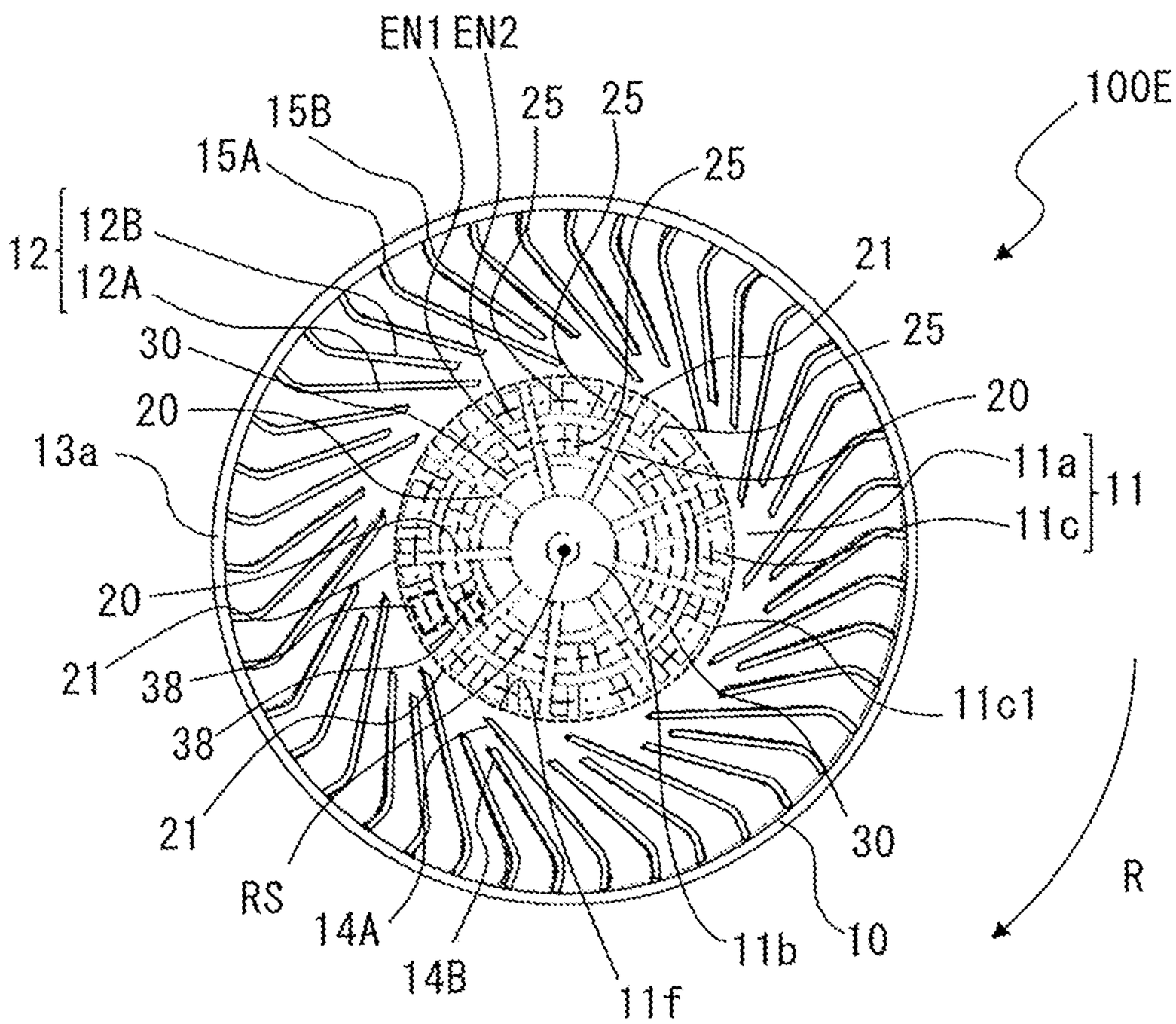
EN1
EN2
100E
15B
25
25
15A
25
12
12B
12A
21
25
30
20
20
13a
11a
11
11c
20
21
38
11c1
38
21
30
RS
R
14A
11b
10
14B
11f

FIG. 25

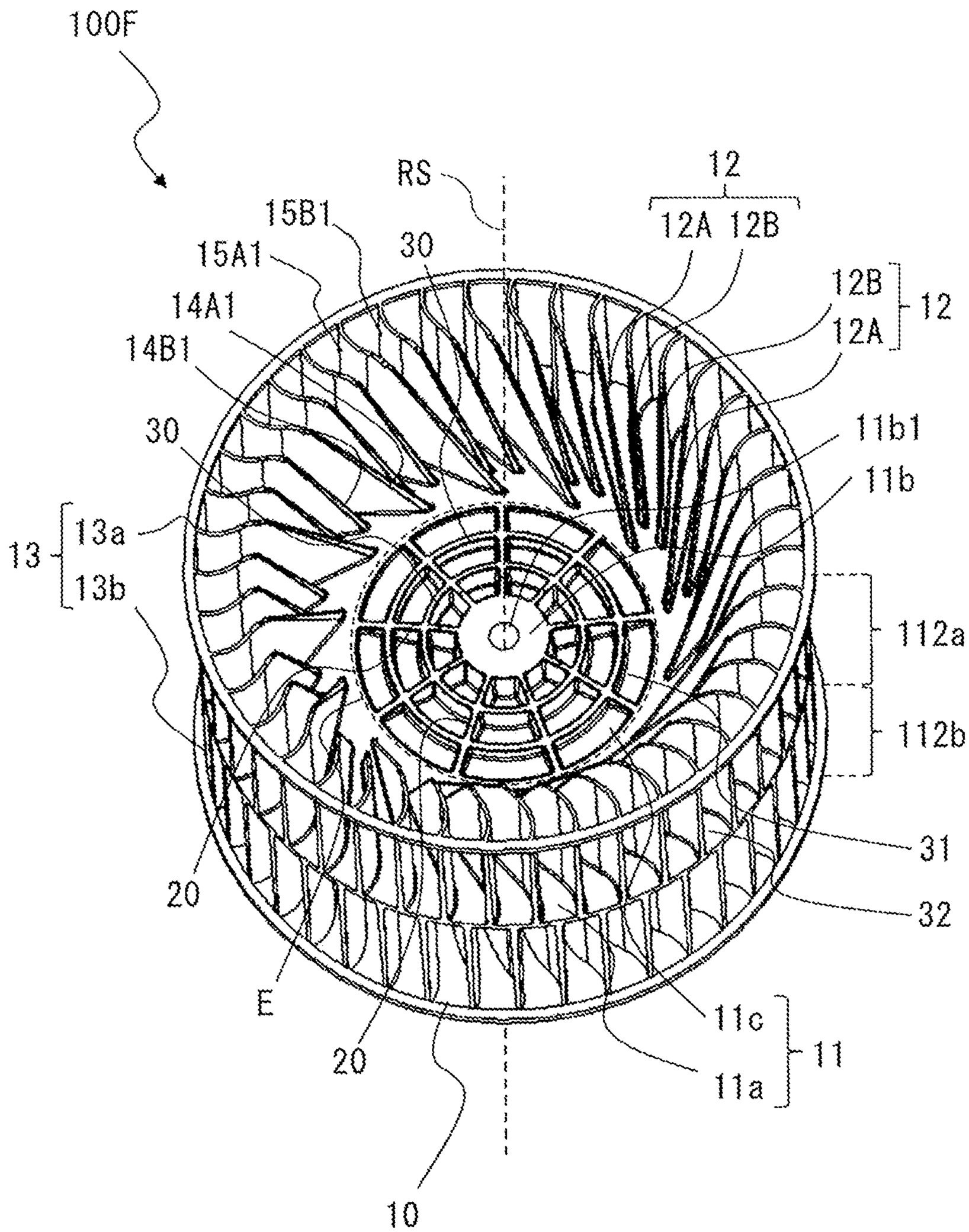
100F
RS
12
12A 12B
15B1
15A1
30
14A1
14B1
12B
12A
12
30
11b1
11b
13
13a
13b
112a
112b
31
20
32
E
11c
11
20
11a
10

FIG. 26

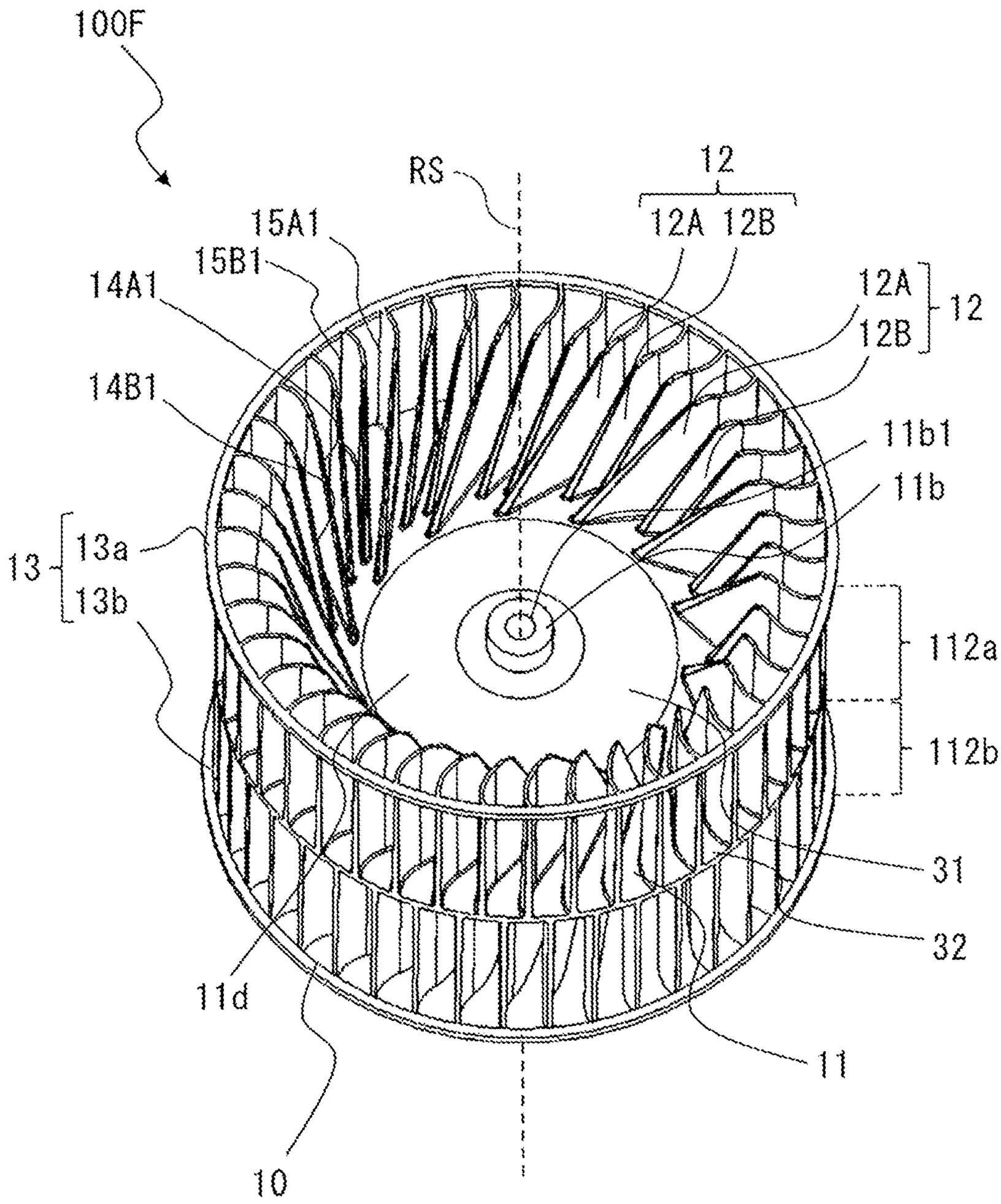
100F
RS
12
12A 12B
15A1
15B1
14A1
14B1
12A
12B
12
11b1
11b
13
13a
13b
112a
112b
31
32
11d
11
10

FIG. 27

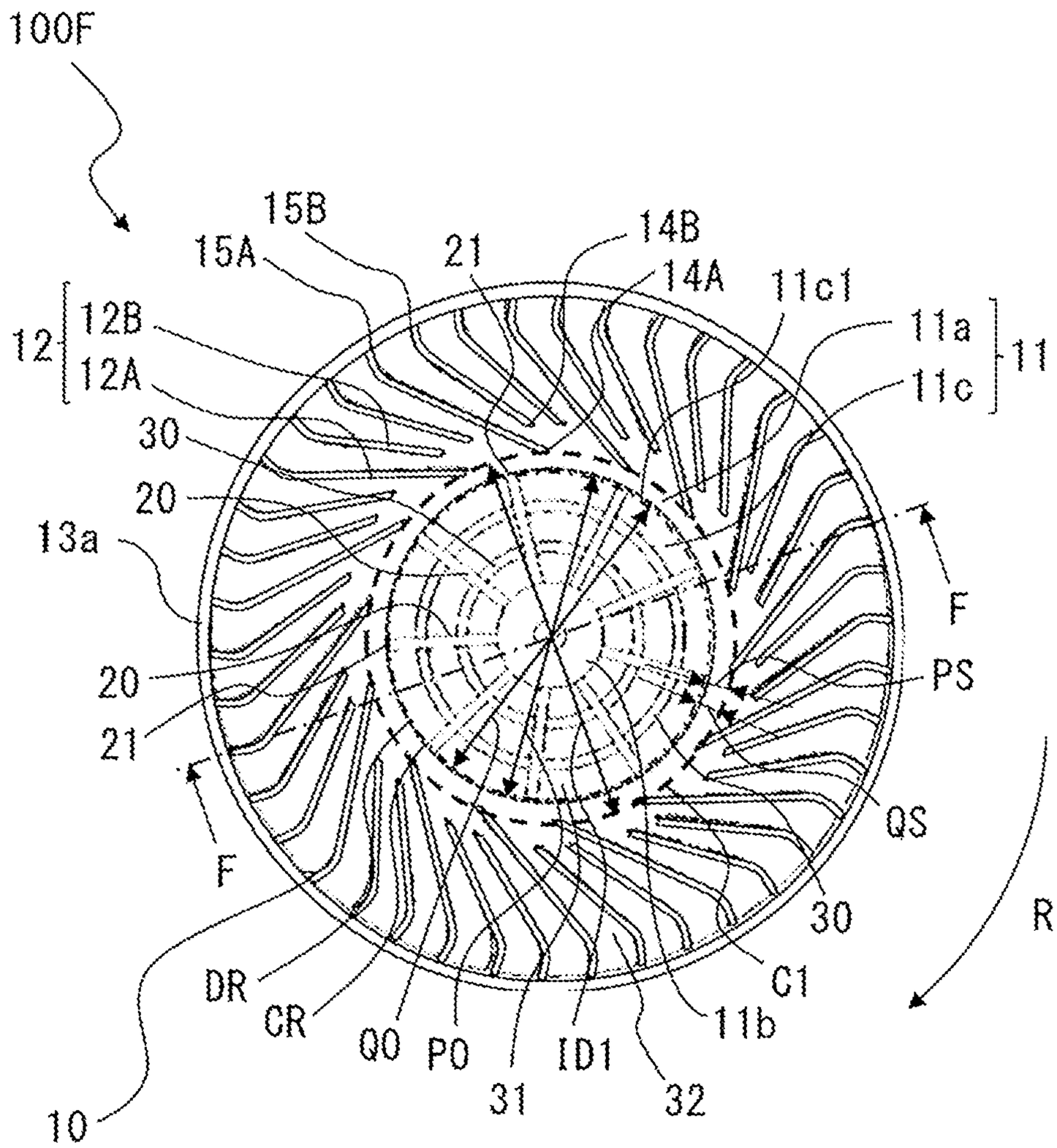
100F
15B
15A
21
14B
14A
11c1
11a
11
11c
12
12B
12A
30
20
13a
F
PS
20
21
QS
F
30
R
DR
C1
CR
11b
Q0
P0
ID1
31
32
10

FIG. 28

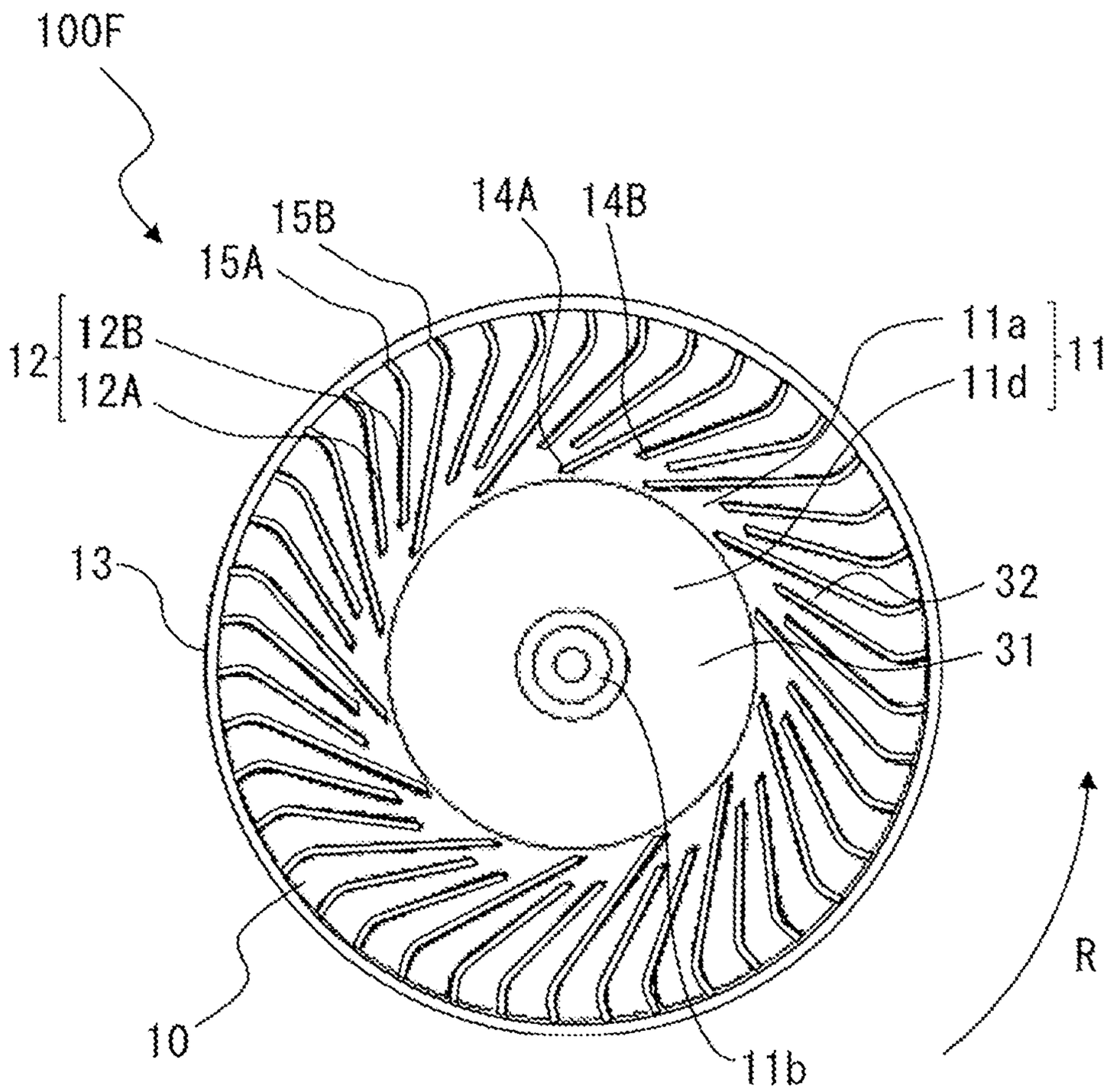

FIG. 29

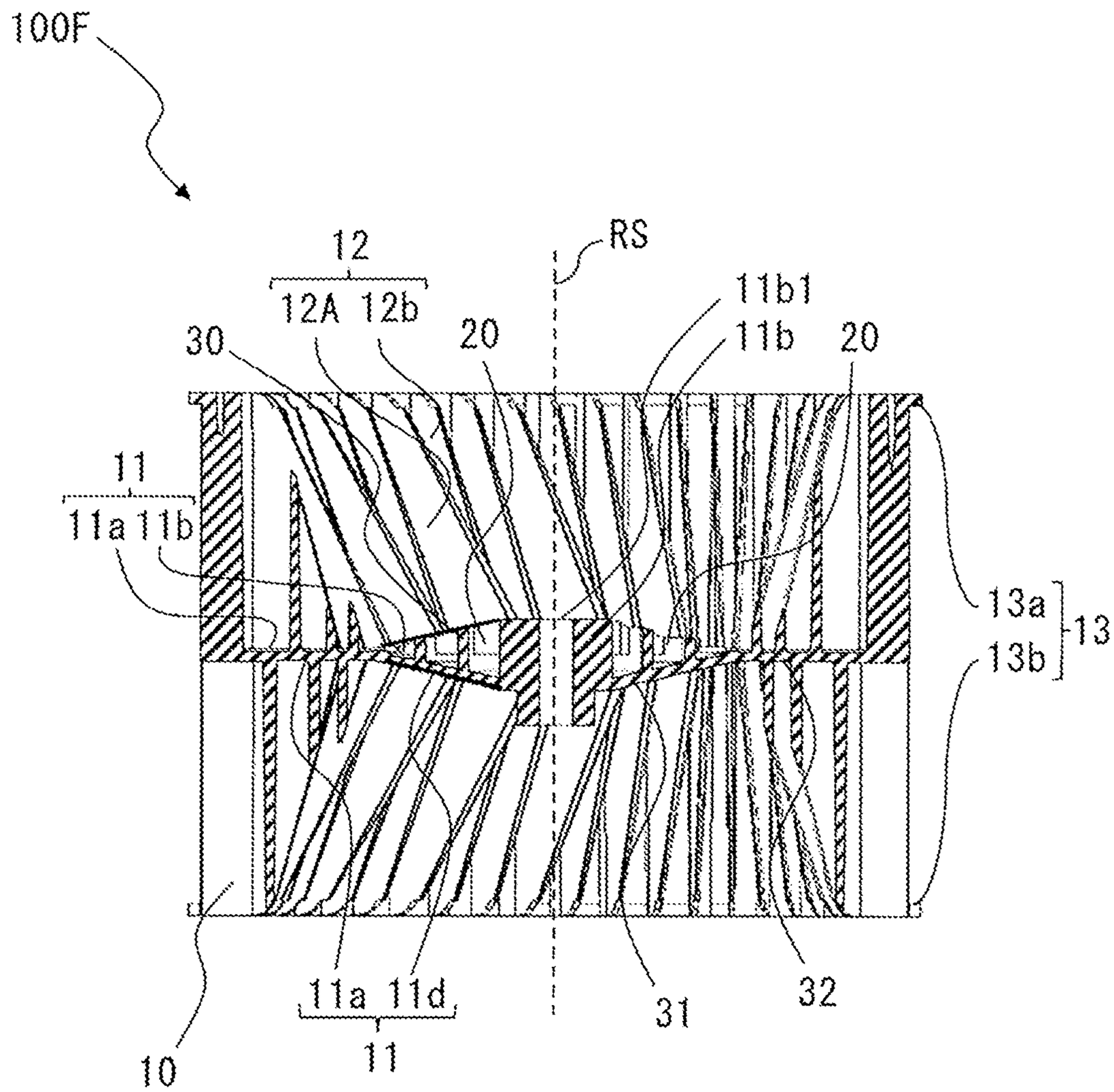
100F
12
12A 12b
RS
11b1
11b
20
30
20
11
11a 11b
13a
13
13b
11a 11d
11
31
32
10

FIG. 30

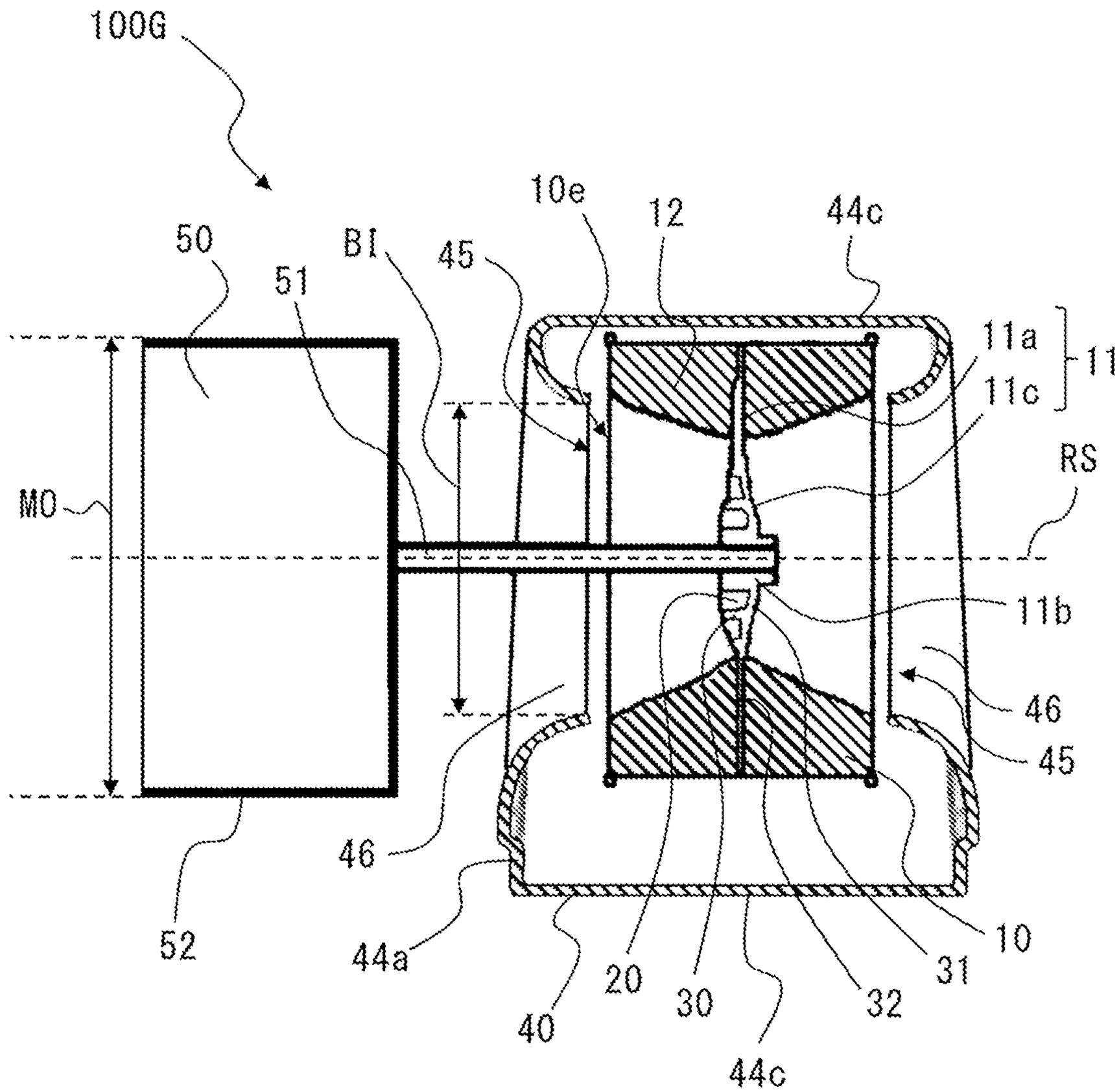
100G
50
51
BI
45
10e
12
44c
11a
11
11c
RS
MO
11b
46
45
46
52
44a
40
20
30
44c
32
31
10

FIG. 31

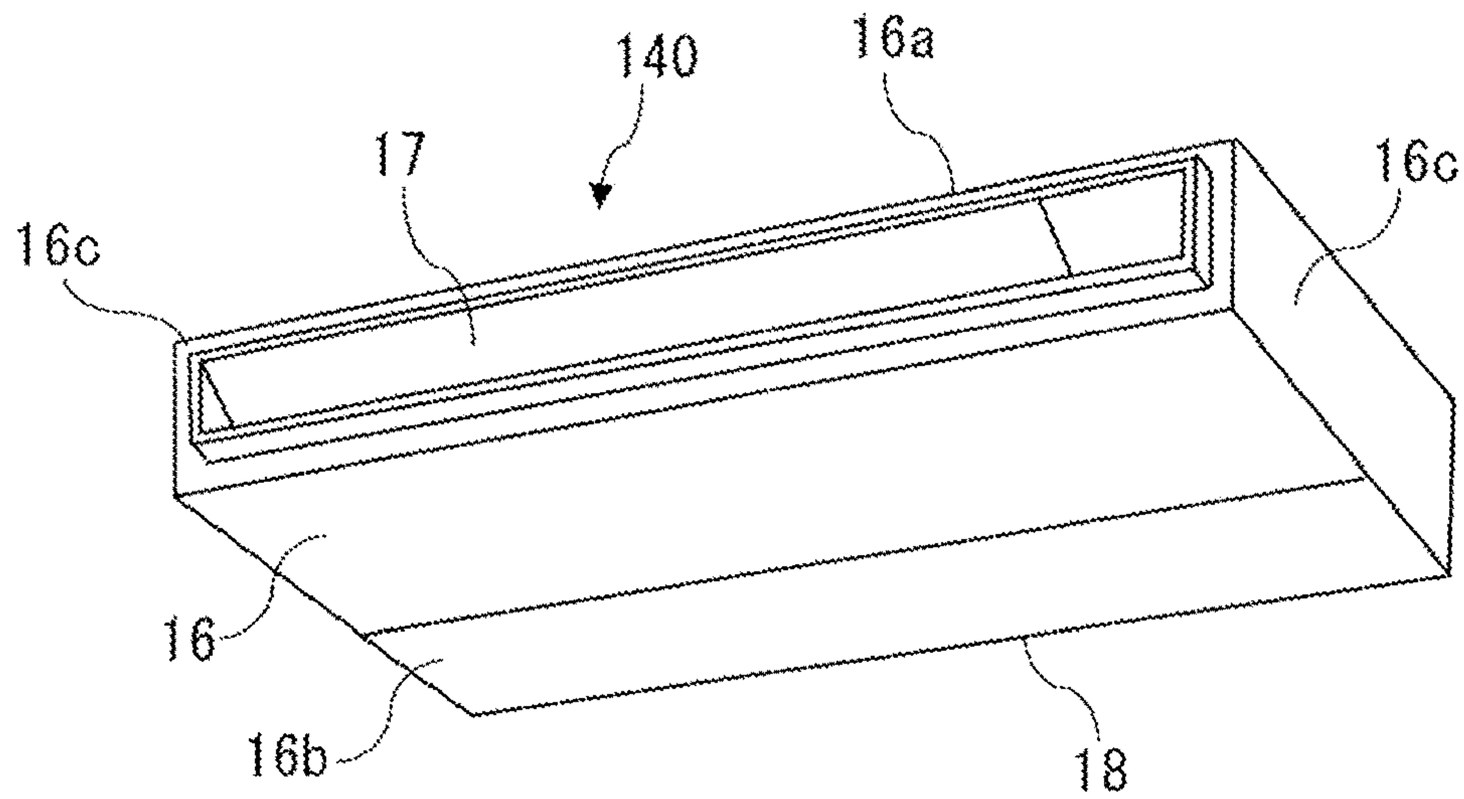
140
16a
17
16c
16c
16
16b
18

FIG. 32

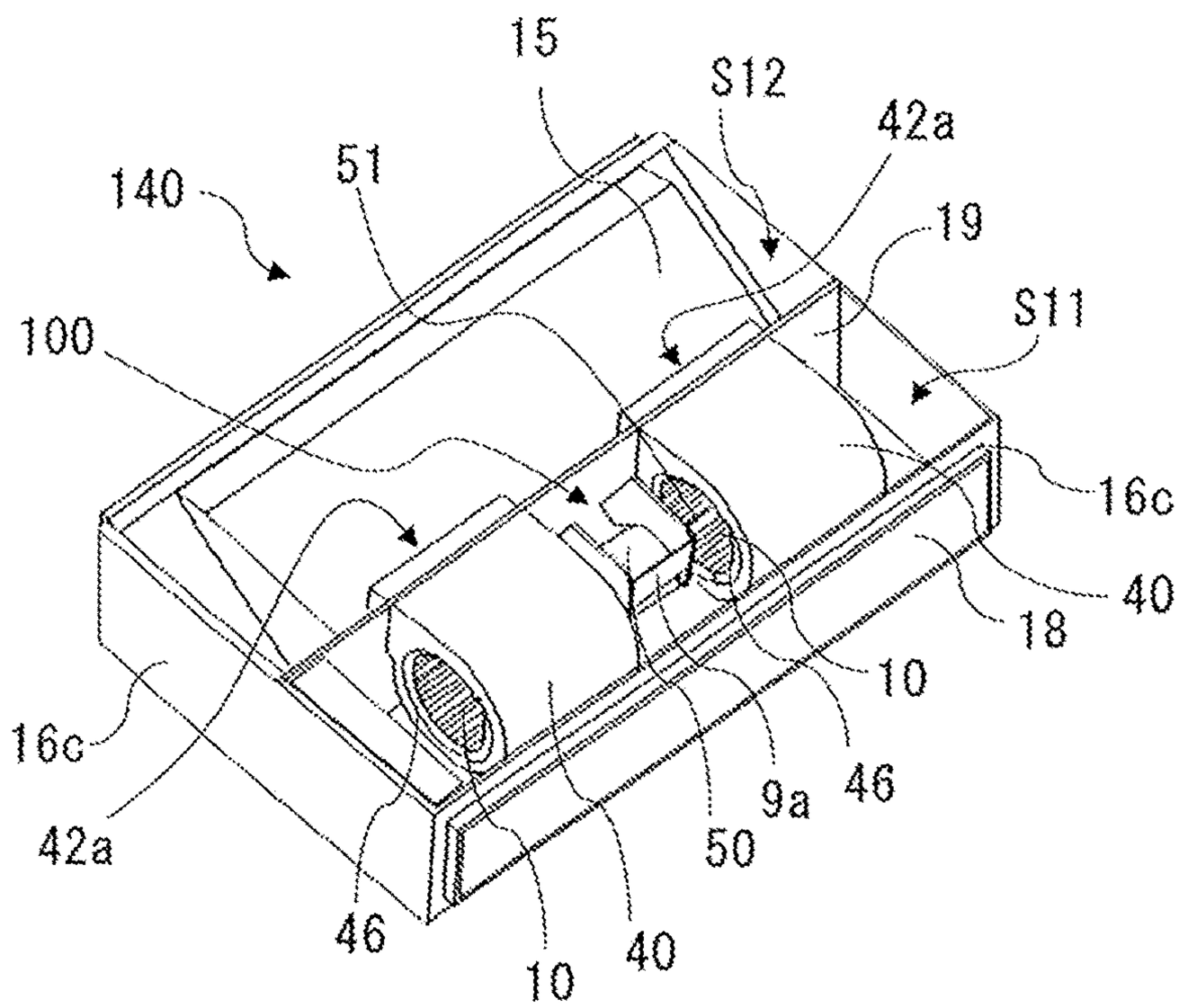
15
S12
42a
140
51
19
S11
100
16c
40
18
10
16c
9a
46
42a
50
46
10
40

IMPELLER, MULTI-BLADE AIR-SENDING DEVICE, AND AIR-CONDITIONING APPARATUS

CROSS REFERENCE TO RELATED APPLICATION

This application is a U.S. national stage application of PCT/JP2020/012324 filed on Mar. 19, 2020, the contents of which are incorporated herein by reference.

TECHNICAL FIELD

The present disclosure relates to an impeller, a multi-blade air-sending device including the impeller, and an air-conditioning apparatus including the multi-blade air-sending device.

BACKGROUND ART

Conventionally, an impeller of a multi-blade air-sending device includes a disk-shaped back plate, radially-arranged blades, and a boss provided in the central part of the back plate and connected to an output shaft of a motor or other devices (see, for example, Patent Literature 1). For an increase in strength, the impeller described in Patent Literature 1 includes a plurality of radially-arranged ribs molded integrally with the back plate.

CITATION LIST

Patent Literature

Patent Literature 1: Japanese Unexamined Utility Model Registration Application Publication No. 59-96397

SUMMARY OF INVENTION

Technical Problem

However, although it is conceivable that the multi-blade air-sending device of Patent Literature 1 may be configured to have high ribs along an axial direction of a rotation shaft of the impeller for an increase in strength of the impeller, having high ribs results in an increased loss during suction, leading to deterioration in air-sending efficiency. Further, since the multi-blade air-sending device of Patent Literature 1 is configured such that a surface of the back plate on which the ribs are mounted and a surface of the back plate on which blades are mounted are flush with each other, outer circumferential portions of the ribs aerodynamically act to cause turbulence in a flow of gas on the inner circumference of the blades, causing deterioration in air-sending efficiency of the impeller.

The present disclosure is intended to solve the aforementioned problem, and has as an object to provide an impeller configured to have improved air-sending efficiency, a multi-blade air-sending device including the impeller, and an air-conditioning apparatus including the multi-blade air-sending device.

Solution to Problem

An impeller according to an embodiment of the present disclosure is an impeller connected to a motor having a drive shaft. The impeller includes a back plate having a boss having a shaft hole through which the drive shaft is inserted, a ring-shaped rim provided to face the back plate, and a plurality of blades connected to the back plate and the rim and arranged along a circumferential direction of the back plate about the rotation shaft. The back plate includes a first surface portion on which the plurality of blades are formed, a second surface portion provided at a region between the boss and the first surface portion and depressed from the first surface portion in an axial direction of the rotation shaft, and a plurality of projections provided at the second surface portion and extending in the axial direction.

A multi-blade air-sending device according to an embodiment of the present disclosure includes the impeller thus configured and a scroll casing housing the impeller and having a peripheral wall formed into a volute shape and a side wall having a bellmouth forming an air inlet communicating with a space formed by the back plate and the plurality of blades.

An air-conditioning apparatus according to an embodiment of the present disclosure includes the multi-blade air-sending device thus configured.

Advantageous Effects of Invention

According to an embodiment of the present disclosure, the back plate includes a first surface portion on which the plurality of blades are formed and a second surface portion provided at a region between the boss and the first surface portion and depressed from the first surface portion in an axial direction of the rotation shaft. Further, the back plate also includes a plurality of projections provided at the second surface portion and extending in the axial direction of the rotation shaft. While the impeller is rotating, the projections draw in a flow of gas by generating negative pressure on a surface of the impeller facing in a direction opposite to a direction of rotation of the impeller, making it possible to increase the amount of air that is suctioned into the impeller. Further, the impeller includes the second surface portion depressed from the first surface portion, on which the plurality of blades are formed, in the axial direction of the rotation shaft, and the projections are provided at the second surface portion. This inhibits a flow of gas produced by the projections from flowing from the second surface portion into the first surface portion. Moreover, the flow of gas produced by the projections has its centrifugally-outward force of wind broken by a step between the first surface portion and the second surface portion, so that the impeller does not suffer from turbulence in the flow of gas on the inner circumference of the blades. This allows the impeller to have higher air-sending efficiency than in a case in which the impeller does not include the projections or the second surface portion.

BRIEF DESCRIPTION OF DRAWINGS

FIG. **1** is a perspective view schematically showing a multi-blade air-sending device according to Embodiment 1.

FIG. **2** is an external appearance diagram schematically showing a configuration of the multi-blade air-sending device according to Embodiment 1 as viewed from an angle parallel with a rotation shaft.

FIG. **3** is a schematic cross-sectional view of the multi-blade air-sending device as taken along line A-A in FIG. **2**.

FIG. **4** is a perspective view of an impeller of the multi-blade air-sending device according to Embodiment 1.

FIG. **5** is a plan view of a back plate of FIG. **4** as seen from one side.

FIG. **6** is a plan view of the back plate of FIG. **4** as seen from the other side.

FIG. **7** is a cross-sectional view of the impeller as taken along line B-B in FIG. **5**.

FIG. **8** is a partially-enlarged view of the back plate in a region indicated by part E of FIG. **4**.

FIG. **9** is a partially-enlarged view of the impeller in a region indicated by part F of FIG. **7**.

FIG. **10** is a schematic partially-enlarged view of the back plate in a region indicated by part G of FIG. **9**.

FIG. **11** is a side view of the impeller of FIG. **4**.

FIG. **12** is a schematic view of blades in a cross-section of the impeller as taken along line C-C in FIG. **11**.

FIG. **13** is a schematic view of the blades in a cross-section of the impeller as taken along line D-D in FIG. **11**.

FIG. **14** is a schematic view showing a relationship between the impeller and bellmouths in a cross-section of the multi-blade air-sending device as taken along line A-A in FIG. **2**.

FIG. **15** is a schematic view showing a relationship between the blades and a bellmouth in a second cross-section of the impeller as viewed from an angle parallel with the rotation shaft in the impeller in FIG. **14**.

FIG. **16** is a schematic view showing a relationship between the impeller and the bellmouths in the cross-section of the multi-blade air-sending device as taken along line A-A in FIG. **2**.

FIG. **17** is a schematic view showing a relationship between the blades and a bellmouth as viewed from an angle parallel with the rotation shaft in the impeller in FIG. **16**.

FIG. **18** is a partially-enlarged view of an impeller of a multi-blade air-sending device according to Embodiment 2.

FIG. **19** is a partially-enlarged view of the impeller of the multi-blade air-sending device according to Embodiment 2.

FIG. **20** is a plan view of an impeller of a multi-blade air-sending device according to Embodiment 3.

FIG. **21** is a cross-sectional view of the impeller as taken along line E-E in FIG. **20**.

FIG. **22** is a plan view schematically showing an impeller of a multi-blade air-sending device according to Embodiment 4,

FIG. **23** is a schematic view showing an example of the shape of projections of the impeller of FIG. **22**.

FIG. **24** is a plan view schematically showing an impeller of a multi-blade air-sending device according to Embodiment 5,

FIG. **25** is a perspective view of an impeller of a multi-blade air-sending device according to Embodiment 6 as seen from one side.

FIG. **26** is a perspective view of the impeller of the multi-blade air-sending device according to Embodiment 6 as seen from the other side.

FIG. **27** is a plan view of the impeller shown in FIG. **25** as seen from one side.

FIG. **28** is a plan view of the impeller shown in FIG. **26** as seen from the other side.

FIG. **29** is a cross-sectional view of the impeller as taken along line F-F in FIG. **27**.

FIG. **30** is a conceptual diagram explaining a relationship between the impeller and a motor in a multi-blade air-sending device according to Embodiment 7.

FIG. **31** is a perspective view of an air-conditioning apparatus according to Embodiment 8.

FIG. **32** is a diagram showing an internal configuration of the air-conditioning apparatus according to Embodiment 8.

DESCRIPTION OF EMBODIMENTS

In the following, an impeller **10**, a multi-blade air-sending device **100** or other devices, and an air-conditioning apparatus **140** according to embodiments are described, for example, with reference to the drawings. In the following drawings including FIG. **1**, relative relationships in dimension between constituent elements, the shapes of the constituent elements, or other features of the constituent elements may be different from actual ones. Further, constituent elements given identical signs in the following drawings are identical or equivalent to each other, and these signs are adhered to throughout the full text of the description. Further, the directive terms (such as "upper", "lower" "right", "left", "front", and "back") used as appropriate for ease of comprehension are merely so written for convenience of explanation, and are not intended to limit the placement or orientation of a device or a component.

Embodiment 1

[Multi-Blade Air-Sending Device **100**]

FIG. **1** is a perspective view schematically showing a multi-blade air-sending device **100** according to Embodiment 1. FIG. **2** is an external appearance diagram schematically showing a configuration of the multi-blade air-sending device **100** according to Embodiment 1 as viewed from an angle parallel with a rotation shaft RS. FIG. **3** is a schematic cross-sectional view of the multi-blade air-sending device **100** as taken along line A-A in FIG. **2**. A basic structure of the multi-blade air-sending device **100** is described with reference to FIGS. **1** to **3**.

The multi-blade air-sending device **100** is a multi-blade centrifugal air-sending device, and has an impeller **10** configured to generate a flow of gas and a scroll casing **40** housing the impeller **10** inside. The multi-blade air-sending device **100** is a double-suction centrifugal air-sending device into which air is suctioned through both sides of the scroll casing **40** in an axial direction of a virtual rotation shaft RS of the impeller **10**.

(Scroll Casing **40**)

The scroll casing **40** houses the impeller **10** inside for use in the multi-blade air-sending device **100**, and rectifies a flow of air blown out from the impeller **10**. The scroll casing **40** has a scroll portion **41** and a discharge portion **42**.

(Scroll Portion **41**)

The scroll portion **41** forms an air trunk through which a dynamic pressure of a flow of gas generated by the impeller **10** is converted into a static pressure. The scroll portion **41** has a side wall **44***a* covering the impeller **10** from an axial direction of a rotation shaft RS of a boss **11***b* of the impeller **10** and having formed therein an air inlet **45** through which air is taken in and a peripheral wall **44***c* surrounding the impeller **10** from a radial direction of the rotation shaft RS of the boss **11***b* of the impeller **10**.

Further, the scroll portion **41** has a tongue **43** located between the discharge portion **42** and a scroll start portion **41***a* of the peripheral wall **44***c* to constitute a curved surface and configured to guide the flow of gas generated by the impeller **10** toward a discharge port **42***a* via the scroll portion **41**. It should be noted that the radial direction of the rotation shaft RS is a direction perpendicular to the axial direction of the rotation shaft RS. An internal space of the scroll portion **41** constituted by the peripheral wall **44***c* and the side wall **44***a* serves as a space in which the air blown out from the impeller **10** flows along the peripheral wall **44***c*.

(Side Wall **44***a*)

The side wall **44***a* is disposed at both sides of the impeller **10** in the axial direction of the rotation shaft RS of the impeller **10**. In the side wall **44***a* of the scroll casing **40**, the

air inlet **45** is formed so that air can flow between the impeller **10** and the outside of the scroll casing **40**.

The inlet port **45** is formed in a circular shape, and is disposed so that the center of the air inlet **45** and the center of the boss **11***b* of the impeller **10** substantially coincide with each other. It should be noted that the shape of the air inlet **45** is not limited to the circular shape but may be another shape such as an elliptical shape.

The scroll casing **40** of the multi-blade air-sending device **100** is a double-suction casing having side walls **44***a* at both sides of a back plate **11** in the axial direction of the rotation shaft RS of the boss **11***b* with air inlets **45** formed in the side walls **44***a*.

The multi-blade air-sending device **100** has two side walls **44***a* in the scroll casing **40**. The two side walls **44***a* are formed to face each other via the peripheral wall **44***c*. More specifically, as shown in FIG. **3**, the scroll casing **40** has a first side wall **44***a***1** and a second side wall **44***a***2** as the side walls **44***a*. The first side wall **44***a***1** forms a first air inlet **45***a* facing a plate side of the back plate **11** on which the after-mentioned first rim **13***a* is disposed. The second side wall **44***a***2** forms a second air inlet **45***b* facing a plate side of the back plate **11** on which the after-mentioned second rim **13***b* is disposed. It should be noted that the aforementioned air inlet **45** is a generic name for the first air inlet **45***a* and the second air inlet **45***b*.

The air inlet **45** provided in the side wall **44***a* is formed by a bellmouth **46**. That is, the bellmouth **46** forms an air inlet **45** communicating with a space formed by the back plate **11** and a plurality of blades **12**. The bellmouth **46** rectifies a flow of gas to be suctioned into the impeller **10** and causes the flow of gas to flow into an air inlet **10***e* of the impeller **10**.

The bellmouth **46** has an opening having a diameter gradually decreasing from the outside toward the inside of the scroll casing **40**. Such a configuration of the side wall **44***a* allows air near the air inlet **45** to smoothly flow along the bellmouth **46** and efficiently flow into the impeller **10** through the air inlet **45**.

(Peripheral Wall **44***c*)

The peripheral wall **44***c* guides the flow of gas generated by the impeller **10** toward the discharge port **42***a* along a curved wall surface. The peripheral wall **44***c* is a wall provided between side walls **44***a* facing each other, and constitutes a curved surface in a direction of rotation R of the impeller **10**. The peripheral wall **44***c* is for example disposed parallel with the axial direction of the rotation shaft RS of the impeller **10** to cover the impeller **10**. It should be noted that the peripheral wall **44***c* may be formed at a slant with respect to the axial direction of the rotation shaft RS of the impeller **10**, and is not limited to being formed to be disposed parallel with the axial direction of the rotation shaft RS.

The peripheral wall **44***c* constitutes an inner circumferential surface covering the impeller **10** from the radial direction of the boss **11***b* and facing the after-mentioned plurality of blades **12**. The peripheral wall **44***c* faces a side of each of the blades **12** through which air is blown out from the impeller **10**. As shown in FIG. **2**, the peripheral wall **44***c* is provided along the direction of rotation R of the impeller **10** over an area from the scroll start portion **41***a*, which is located at a boundary with the tongue **43**, to a scroll end portion **41***b* located at a boundary between the discharge portion **42** and the scroll portion **41** at a side away from the tongue **43**.

The scroll start portion **41***a* is an end portion of the peripheral wall **44***c*, which constitutes a curved surface, situated on an upstream side of a flow of gas generated by rotation of the impeller **10**, and the scroll end portion **41***b* is an end portion of the peripheral wall **44***c* situated on a downstream side of the flow of gas generated by rotation of the impeller **10**.

The peripheral wall **44***c* is formed in a volute shape. An example of the volute shape is a shape based on a logarithmic spiral, a spiral of Archimedes, or an involute curve. An inner peripheral surface of the peripheral wall **44***c* constitutes a curved surface smoothly curved along a circumferential direction of the impeder **10** from the scroll start portion **41***a*, at which the volute shape starts rolling, to the scroll end portion **41***b*, at which the volute shape finishes rolling. Such a configuration allows air sent out from the impeller **10** to smoothly flow through the space between the impeller **10** and the peripheral wall **44***c* in a direction toward the discharge portion **42**. This effects an efficient rise in static pressure of air from the tongue **43** toward the discharge portion **42** in the scroll casing **40**.

(Discharge Portion **42**)

The discharge portion **42** forms a discharge port **42***a* through which a flow of gas generated by the impeller **10** and having passed through the scroll portion **41** is discharged. The discharge portion **42** is constituted by a hollow pipe having a rectangular cross-section orthogonal to a flow direction of air flowing along the peripheral wall **44***c*. It should be noted that the cross-sectional shape of the discharge portion **42** is not limited to a rectangle. The discharge portion **42** forms a flow passage through which air sent out from the impeller **10** and flowing through a gap between the peripheral wall **44***c* and the impeller **10** is guided to be exhausted out of the scroll casing **40**.

As shown in FIG. **1**, the discharge portion **42** is constituted by an extension plate **42***b*, a diffuser plate **42***c*, a first side plate portion **42***d*, a second side plate portion **42***e*, or other components. The extension plate **42***b* is formed integrally with the peripheral wall **44***c* to smoothly continue into the scroll end portion **41***b* downstream of the peripheral wall **44***c*. The diffuser plate **42***c* is formed integrally with the tongue **43** of the scroll casing **40** and faces the extension plate **42***b*. The diffuser plate **42***c* is formed at a predetermined angle with respect to the extension plate **42***b* so that the cross-sectional area of the flow passage gradually increases along a flow direction of air in the discharge portion **42**.

The first side plate portion **42***d* is formed integrally with the first side wall **44***a***1** of the scroll casing **40**, and the second side plate portion **42***e* is formed integrally with the opposite second side wall **44***a***2** of the scroll casing **40**. Moreover, the first side plate portion **42***d* and the second side plate portion **42***e* are formed between the extension plate **42***b* and the diffuser plate **42***c*. Thus, the discharge portion **42** has a rectangular cross-section flow passage formed by the extension plate **42***b*, the diffuser plate **42***c*, the first side plate portion **42***d*, and the second side plate portion **42***e*.

(Tongue **43**)

In the scroll casing **40**, the tongue **43** is formed between the diffuser plate **42***c* of the discharge portion **42** and the scroll start portion **41***a* of the peripheral wall **44***c*. The tongue **43** is formed with a predetermined radius of curvature, and the peripheral wall **44***c* is smoothly connected to the diffuser plate **42***c* via the tongue **43**.

The tongue **43** reduces inflow of air from the scroll start to the scroll end of a volute flow passage. The tongue **43** is provided in an upstream part of a ventilation flue, and has a role to effect diversion into a flow of air in the direction of rotation R of the impeller **10** and a flow of air in a discharge

direction from a downstream part of the ventilation flue toward the discharge port **42***a*. Further, a flow of air flowing into the discharge portion **42** rises in static pressure during passage through the scroll casing **40** to be higher in pressure than in the scroll casing **40**. Therefore, the tongue **43** has a function of separating such different pressures.

[Impeller **10**]

FIG. **4** is a perspective view of the impeller **10** of the multi-blade air-sending device **100** according to Embodiment 1. FIG. **5** is a plan view of a back plate **11** of FIG. **4** as seen from one side. FIG. **6** is a plan view of the back plate **11** of FIG. **4** as seen from the other side. FIG. **7** is a cross-sectional view of the impeller **10** as taken along line B-B in FIG. **5**. It should be noted that FIG. **5** is a diagram of the impeller **10** as viewed from a point of view V1 indicated by an outline arrow in FIG. **4**, and is a plan view as viewed from an angle parallel with the axial direction of the rotation shaft RS. FIG. **6** is a diagram of the impeller **10** as viewed from a point of view V2 indicated by an outline arrow in FIG. **4**, and is a plan view as viewed from an angle parallel with the axial direction of the rotation shaft RS. The impeller **10** is described with reference to FIGS. **4** to **7**.

The impeller **10** is a centrifugal fan. The impeller **10** is connected to a motor (not illustrated) having a drive shaft. The impeller **10** is driven into rotation, for example, by the motor. The rotation generates a centrifugal force with which the impeller **10** forcibly sends out air outward in a radial direction. The impeller **10** is rotated, for example, by the motor in a direction of rotation R indicated by an arrow. As shown in FIG. **4**, the impeller **10** has a disk-shaped back plate **11**, a circular-ring-shaped rim **13**, and a plurality of blades **12** arranged radially along a circumferential direction of the back plate **11** on a peripheral edge of the back plate **11**.

(Back Plate **11**)

The back plate **11** needs only be in the shape of a plate, and may for example have a non-disk shape such as a polygonal shape. The back plate **11** has in the central part thereof a boss **11***b* to which the drive shaft of the motor is connected. The boss **11***b* has formed therein a shaft hole **11***b***1** through which the drive shaft of the motor is inserted. The boss **11***b* is formed in a circular cylindrical shape, although the shape of the boss **11***b* is not limited to a circular cylindrical shape. The boss **11***b* needs only be formed in a columnar shape and, as one example, may be formed, for example, in a polygonal columnar shape. The back plate **11** is driven into rotation by the motor via the boss **11***b*. It should be noted that the back plate **11** is not limited to being constituted by one plate-like element but may be constituted by a plurality of plate-like elements fixed in an integrated fashion.

FIG. **8** is a partially-enlarged view of the back plate **11** in a region indicated by part E of FIG. **4**. FIG. **9** is a partially-enlarged view of the impeller **10** in a region indicated by part F of FIG. **7**. FIG. **10** is a schematic partially-enlarged view of the back plate **11** in a region indicated by part G of FIG. **9**. A configuration of the back plate **11** is described in more detail with reference to FIGS. **8** to **10**.

(First Surface Portion **11***a* and Second Surface Portion **11***c*)

The back plate **11** has a first surface portion **11***a* on which the plurality of blades **12** are formed and a second surface portion **11***c* provided at a region between the boss **11***b* and the first surface portion **11***a* and depressed from the first surface portion **11***a* in an axial direction of the rotation shaft RS. The first surface portion **11***a* is located closer to the rim **13** than the second surface portion **11***c*.

The first surface portion **11***a* is formed closer to an outer circumference than the second surface portion **11***c* about the rotation shaft RS. The first surface portion **11***a* is formed in a ring shape in a plan view as viewed in the axial direction of the rotation shaft RS, and the second surface portion **11***c* is formed at an inner circumferential side of the first surface portion **11***a*.

In a plan view as viewed in the axial direction of the rotation shaft RS, the second surface portion **11***c* is provided at a circular-ring-shaped region about the boss **11***b*. That is, the second surface portion **11***c* is depressed in a circular ring shape about the boss **11***b*. It should be noted that when the second surface portion **11***c* is depressed, the second surface portion **11***c* is not limited to being depressed in a circular ring shape about the boss **11***b*. As one example, the second surface portion **11***c* may be depressed in a radial fashion about the boss **11***b*. The back plate **11** needs only include, at the inner circumferential side of the first surface portion **11***a*, a second surface portion **11***c* depressed from the first surface portion **11***a*.

As shown in FIGS. **5** to **7**, the back plate **11** has its first and second surface portions **11***a* and **11***c* on both plate sides of the back plate **11** in the axial direction of the rotation shaft RS. In the back plate **11**, the second surface portion **11***c* is constituted by a plate whose thickness is thinner than the thickness of a plate constituting the first surface portion **11***a*. As mentioned above, the second surface portion **11***c* is depressed from the first surface portion **11***a*. Therefore, as shown in FIG. **10**, the back plate **11** has a step **11***f* formed between the first surface portion **11***a* and the second surface portion **11***c*.

In the back plate **11** of Embodiment 1, the step **11***f* forms an outer circumferential edge **11***c***1** of the second surface portion **11***c*. As shown in FIGS. **5** and **6**, the length of a depression outside diameter PO constituted by the outer circumferential edge **11***c***1** of the second surface portion **11***c* is greater than the magnitude of a difference PS between an inside diameter ID1 of the blades **12** constituted by an inner circumferential end **14**A of each of the plurality of blades **12** and the depression outside diameter PO. That is, the back plate **11** is configured such that the relationships "Depression Outside Diameter PO>(Inside Diameter ID1−Depression Outside Diameter PO)" and "Depression Outside Diameter PO>Difference PS" hold. Accordingly, the second surface portion **11***c* is formed close to a blade inside diameter of the blades **12** in a radial direction about the rotation shaft RS. It should be noted that the depression outside diameter PO is the diameter of a circle CR constituted by the outer circumferential edge **11***c***1** of the second surface portion **11***c* about the rotation shaft RS. Further, the inside diameter ID1 is the diameter of a circle C1 passing through the inner circumferential ends **14**A of the plurality of first blades **12**A about the rotation shaft RS.

(Projection **20**)

As shown in FIGS. **4** to **10**, the back plate **11** includes a plurality of projections **20** provided at the second surface portion **11***c* and extending in the axial direction of the rotation shaft RS. The plurality of projections **20** are provided in a radial fashion about the rotation shaft RS, and each of the plurality of projections **20** extends in the radial direction about the rotation shaft RS. As shown in FIGS. **5** and **6**, the back plate **11** has its first and second surface portions **11***a* and **11***c* on both plate sides of the back plate **11**, and each of the second surface portions **11***c* formed on both plate sides of the back plate **11** includes the plurality of projections **20**. As shown in FIG. **8**, the back plate **11**

includes nine projections **20**. However, the number of projections **20** that are formed is not limited to 9.

As shown in FIG. **8**, each of the plurality of projections **20** is a rib formed in the shape of a plate rising from the second surface portion **11***c*. More specifically, the projection **20** is formed in the shape of a four-cornered plate. Note, however, that the projection **20** needs only be a structure projecting from the second surface portion **11***c* and is not limited to the four-cornered plate-like configuration.

As shown in FIG. **8**, the projection **20** includes a base **24** connected to the second surface portion **11***c* and serving as a root portion of the projection **20** and a ridge **26** constituting a leading end portion in a direction of projection from the second surface portion **11***c* and forming a ridge line of the projection **20**. It should be noted that the ridge line is constituted by leading end portions of the projection **20** in the direction of projection, and refers to a series of leading end portions of the projection **20** opposite the second surface portion **11***c* and a series of highest portions of the projection **20** with the second surface portion **11***c* being a bottom surface portion. The ridge **26** is configured such that a ridge line constituted by the leading end portion in the direction of projection is formed in a linear fashion in a side view as viewed from a direction perpendicular to the axial direction of the rotation shaft RS. It should be noted that ridge **26** is not limited to being configured such that the ridge line is formed in a linear fashion in a side view as viewed from a direction perpendicular to the axial direction of the rotation shaft RS.

Further, the projection **20** includes a projection inner circumferential end **23** serving as an inner circumferential end portion located beside the rotation shaft RS in the radial direction about the rotation shaft RS and a projection outer circumferential end **21** serving as an outer circumferential end portion beside the plurality of blades **12** in the radial direction. The projection inner circumferential end **23** constitutes an inner circumferential end portion of the projection **20**, and the projection outer circumferential end **21** constitutes an outer circumferential end portion of the projection **20**.

As shown in FIG. **8**, each of the plurality of projections **20** is connected to an outer circumferential wall **11***b***2** of the boss **11***b*. That is, the projection inner circumferential end **23** of the projection **20** is connected to the boss **11***b*. Note, however, that the projection **20** is not limited to being configured such that the projection inner circumferential end **23** is connected to the outer circumferential wall **11***b***2** of the boss **11***b*. In the radial direction about the rotation shaft RS, a space may be formed between the projection inner circumferential end **23** of the projection **20** and the outer circumferential wall **11***b***2** of the boss **11***b*.

Each of the plurality of projections **20** is connected to the step **11***f*. That is, the projection outer circumferential end **21** of the projection **20** is connected to the step **11***f*. Note, however, that the projection **20** is not limited to being configured such that the projection outer circumferential end **21** is connected to the step **11***f*. In the radial direction about the rotation shaft RS, a space may be formed between the projection outer circumferential end **21** of the projection **20** and the step **11***f*.

In a case in which a height direction is a direction parallel with the axial direction of the rotation shaft RS and a direction of projection from the second surface portion **11***c*, the plurality of projections **20** have their heights formed at the same height. Note, however, that the back plate **11** is not limited to being configured such that the plurality of projections **20** have their heights formed at the same height. The plurality of projections **20** may be formed at different heights, or may form a group of the same height based on certain regularity.

In a case in which the height direction is the direction parallel with the axial direction of the rotation shaft RS and the direction of projection from the second surface portion **11***c*, the projection outer circumferential end **21**, which serves as an outermost circumferential portion of the projection **20**, corresponds in height to the first surface portion **11***a*. Alternatively, as shown in FIG. **10**, the height of the projection outer circumferential end **21**, which serves as the outermost circumferential portion of the projection **20**, is lower than the height of the first surface portion **11***a*, and the projection outer circumferential end **21** has an upper end portion **21***a* located closer to the second surface portion **11***c* than the first surface portion **11***a*. In FIG. **10**, a virtual surface extension of the first surface portion **11***a* is expressed as a surface of extension FL. As shown in FIG. **10**, the upper end portion **21***a* of the projection outer circumferential end **21** is located closer to the second surface portion **11***c* than the surface of extension FL. In other words, the projection outer circumferential end **21**, which serves as the outermost circumferential portion of the projection **20**, is formed not to project from the first surface portion **11***a* in the direction parallel with the axial direction of the rotation shaft RS.

The height of the projection inner circumferential end **23** of the projection **20** is equal to or lower than the height of a leading end portion of the boss **11***b*. It should be noted that the height of the leading end portion of the boss **11***b* is greater than the height of the first surface portion **11***a*. For example, in the axial direction of the rotation shaft RS, the thickness of a plate constituting the boss **11***b* is greater than the thickness of the plate constituting the first surface portion **11***a*. Note, however, that the height of the leading end portion of the boss **11***b* is not limited to being greater than the height of the first surface portion **11***a* but may be equal to the height of the first surface portion **11***a*.

In a case in which the height of the leading end portion of the boss **11***b* is greater than the height of the first surface portion **11***a*, each of the plurality of projections **20** has an inclined portion **26***a* on the ridge **26**. The inclined portion **26***a* is a portion of the ridge **26** whose ridge line is inclined such that the height of the inclined portion **26***a* in the axial direction of the rotation shaft RS decreases from the inner circumference toward the outer circumference. The inclined portion **26***a* of the projection **20** is formed to be higher beside the projection inner circumferential end **23** than beside the projection outer circumferential end **21**, and the ridge **26**, which constitutes the inclined portion **26***a*, is inclined to increase in distance from the back plate **11** from the projection outer circumferential end **21** toward the projection inner circumferential end **23**. It should be noted that the configuration of the inclined portion **26***a* is not limited to this configuration. The inclined portion **26***a* may be a portion of the ridge **26** whose ridge line is inclined such that the inclined portion **26***a* increases in height of projection from the boss **11***b* toward the plurality of blades **12**. In this case, the inclined portion **26***a* of the projection **20** is formed to be higher beside the projection outer circumferential end **21** than beside the projection inner circumferential end **23**, and the ridge **26**, which constitutes the inclined portion **26***a*, is inclined to increase in distance from the back plate **11** from the projection inner circumferential end **23** toward the projection outer circumferential end **21**.

As shown in FIGS. **5** and **6**, the length of a projection outside diameter QO constituted by the projection outer circumferential end **21** of each of the plurality of projections

20 is greater than the magnitude of a difference QS between the inside diameter ID1 of the blades **12** constituted by the inner circumferential end **14**A of each of the plurality of blades **12** and the projection outside diameter 00. That is, the back plate **11** is configured such that the relationship "Projection Outside Diameter QO>(Inside Diameter ID1−Projection Outside Diameter QO)" or "Projection Outside Diameter QO>Difference QS" holds. Accordingly, the projection **20** is formed close to the blade inside diameter of the blades **12** in the radial direction about the rotation shaft RS. It should be noted that the projection outside diameter QO is the diameter of a circle DR passing through the projection outer circumferential ends **21** of the plurality of projections **20** about the rotation shaft RS. In a case in which the projection outer circumferential end **21** of the projection **20** is connected to the step **11***f*, the depression outside diameter PO and the projection outside diameter QO are equal (Depression Outside Diameter PO=Projection Outside Diameter QO), and the difference PS and the difference QS are equal (Difference PS=Difference QS). Further, the circle CR constituted by the outer circumferential edge **11***c***1** of the second surface portion **11***c* about the rotation shaft RS and the circle DR passing through the projection outer circumferential ends **21** of the plurality of projections **20** are equal (Circle CR=Circle DR).

As shown in FIG. **8**, the back plate **11** includes a depression **34** in front of and behind a projection **20** along the circumferential direction. In other words, the depression **34** is formed between adjacent projections **20** along the circumferential direction. The depression **34** is formed by the second surface portions **11***c*. More specifically, the depression **34** is formed by the second surface portion **11***c*, adjacent projections **20**, the boss **11***b*, and the step **11***f*. The depression **34** is formed in a radial fashion with respect to the boss **11***b*. A plurality of the depressions **34** are formed along the circumferential direction.

(Reinforcing Portion **30**)

As shown in FIGS. **8** and **9**, the back plate **11** includes a reinforcing portion **30** provided at the second surface portion **11***c* and extending in the axial direction of the rotation shaft RS. The reinforcing portion **30** is a reinforcing rib formed in the shape of a plate rising from the second surface portion **11***c*. The reinforcing portion **30** is formed in a circular arc shape in a plan view as viewed in the direction parallel with the axial direction of the rotation shaft RS, and connects the plurality of projections **20** to each other along the circumferential direction. Accordingly, the reinforcing portion **30** is formed in a circular ring shape in a plan view as viewed in the direction parallel with the axial direction of the rotation shaft RS. The reinforcing portion **30** is connected to the projection **20**. The reinforcing portion **30** constitutes a wall that is equal in height to a wall of a projection **20** in a location where the reinforcing portion **30** is connected to the projection **20**.

A plurality of the reinforcing portions **30** are provided in the radial direction about the rotation shaft RS. In a case in which the plurality of reinforcing portions **30** are provided in the radial direction, the back plate **11** is formed such that in the radial direction about the rotation shaft RS, a reinforcing portion **30** located beside the inner circumference is higher in wall height than a reinforcing portion **30** located beside the outer circumference. As shown in FIG. **8**, the back plate **11** includes reinforcing portions **30** forming two circles. However, the number of reinforcing portions **30** that are formed is not limited to 2.

As shown in FIG. **8**, the back plate **11** forms a depression **35** formed in a depressed shape by projections **20**, the reinforcing portions **30**, and the second surface portion **11***c*. Similarly, the back plate **11** forms a depression **36** formed in a depressed shape by projections **20**, a reinforcing portion **30**, the step **11***f*, and the second surface portion **11***c*. Similarly, the back plate **11** forms a depression **37** formed in a depressed shape by projections **20**, a reinforcing portion **30**, the outer circumferential wall **11***b***2** of the boss **11***b*, and the second surface portion **11***c*.

(Blade **12**)

As shown in FIG. **4**, the plurality of blades **12** are arranged along a circumferential direction about a virtual rotation shaft RS of the back plate **11**. One end of each of the plurality of blades **12** is connected to the back plate **11**, and the other end of each of the plurality of blades **12** is connected to the rim **13**. Each of the plurality of blades **12** is disposed between the back plate **11** and the rim **13**. The plurality of blades **12** are provided on both sides of the back plate **11** in the axial direction of the rotation shaft RS of the boss **11***b*. The blades **12** are placed at regular spacings from each other on the peripheral edge of the back plate **11**. A configuration of the blades **12** will be described in detail later.

(Rim **13**)

The ring-shaped rim **13** of the impeller **10** is attached to ends of the plurality of blades **12** opposite to the back plate **11** in the axial direction of the rotation shaft RS of the boss **11***b*. The rim **13** is provided in the impeller **10** to face the back plate **11**. The rim **13** couples the plurality of blades **12** with each other, thereby maintaining a positional relationship between the tip of each blade **12** and the tip of the other blade **12** and reinforcing the plurality of blades **12**.

FIG. **11** is a side view of the impeller **10** of FIG. **4**. As shown in FIGS. **4** and **11**, the impeller **10** has a first blade group **112***a* and a second blade group **112***b*. The first blade group **112***a* and the second blade group **112***b* are constituted by the plurality of blades **12** and the rim **13**. More specifically, the first blade group **112***a* is constituted by a ring-shaped first rim **13***a* disposed to face the back plate **11** and a plurality of blades **12** disposed between the back plate **11** and the first rim **13***a*.

The second blade group **112***b* is constituted by a ring-shaped second rim **13***b* disposed on a side of the back plate **11** opposite to the first rim **13***a* to face the back plate **11** and a plurality of blades **12** disposed between the back plate **11** and the second rim **13***b*. It should be noted that the rim **13** is a generic name for the first rim **13***a* and the second rim **13***b*, and the impeller **10** has the first rim **13***a* on one side of the back plate **11** in the axial direction of the rotation shaft RS, and has the second rim **13***b* on the other side.

The first blade group **112***a* is disposed on one plate side of the back plate **11**, and the second blade group **112***b* is disposed on the other plate side of the back plate **11**. That is, the plurality of blades **12** are provided on both sides of the back plate **11** in the axial direction of the rotation shaft RS, and the first blade group **112***a* and the second blade group **112***b* are provided back to back with each other via the back plate **11**. In FIG. **3**, the first blade group **112***a* is disposed on the left side of the back plate **11**, and the second blade group **112***b* is disposed on the right side of the back plate **11**. However, the first blade group **112***a* and the second blade group **112***b* need only be provided back to back with each other via the back plate **11**. The first blade group **112***a* may be disposed on the right side of the back plate **11**, and the second blade group **112***b* may be disposed on the left side of the back plate **11**. In the following description, those blades **12** which constitute the first blade group **112***a* and those

blades **12** which constitute the second blade group **112***b* are collectively referred to as "blades **12**" unless otherwise noted.

The impeller **10** is constituted in a tubular shape by the plurality of blades **12** disposed on the back plate **11**. Moreover, the impeller **10** has an air inlet **10***e* formed at a side of the rim **13** opposite to the back plate **11** in the axial direction of the rotation shaft RS of the boss **11***b* and configured to cause gas to flow into a space surrounded by the back plate **11** and the plurality of blades **12**. The impeller **10** has its blades **12** and rims **13** disposed on both plate sides, respectively, of the back plate **11**, and has its air inlets **10***e* formed at both plate sides, respectively, of the back plate **11**.

The impeller **10** is driven into rotation about the rotation shaft RS by driving of the motor (not illustrated). The rotation of the impeller **10** causes gas outside the multi-blade air-sending device **100** to be suctioned into the space surrounded by the back plate **11** and the plurality of blades **12** through the air inlet **45** formed in the scroll casing **40** shown in FIG. **1** and the air inlet **10***e* of the impeller **10**. Moreover, the rotation of the impeller **10** causes air suctioned into the space surrounded by the back plate **11** and the plurality of blades **12** to be sent out outward in a radial direction of the impeller **10** through a space between a blade **12** and an adjacent blade **12**.

(Configuration of Blades **12** in Detail)

FIG. **12** is a schematic view of the blades **12** in a cross-section of the impeller **10** as taken along line C-C in FIG. **11**. FIG. **13** is a schematic view of the blades **12** in a cross-section of the impeller **10** as taken along line D-D in FIG. **11**. In FIG. **11**, a middle point MP of the impeller **10** indicates a middle point in the axial direction of the rotation shaft RS in the plurality of blades **12** constituting the first blade group **112***a*.

In the plurality of blades **12** constituting the first blade group **112***a*, a region from the middle point MP in the axial direction of the rotation shaft RS to the back plate **11** is a back-plate-side blade region **122***a* serving as a first region of the impeller **10**. Further, in the plurality of blades **12** constituting the first blade group **112***a*, a region from the middle point MP in the axial direction of the rotation shaft RS to an end portion of the rim **13** is a rim-side blade region **122***b* serving as a second region of the impeller **10**. That is, each of the plurality of blades **12** has a first region located closer to the back plate **11** than the middle point MP in the axial direction of the rotation shaft RS and a second region located closer to the rim **13** than the first region.

As shown in FIG. **12**, the cross-section taken along line C-C in FIG. **11** is a cross-section of the plurality of blades **12** beside the back plate **11** of the impeller **10**, that is, in the back-plate-side blade region **122***a* serving as the first region. This cross-section of the blades **12** beside the back plate **11** is a first cross-section of the impeller **10** made by cutting through a portion of the impeller **10** close to the back plate **11** along a first plane **71** perpendicular to the rotation shaft RS. Note here that the portion of the impeller **10** close to the back plate **11** is for example a portion of the impeller **10** closer to the back plate **11** than a middle point of the back-plate-side blade region **122***a* in the axial direction of the rotation shaft RS or a portion of the impeller **10** in which end portions of the blades **12** facing the back plate **11** are located in the axial direction of the rotation shaft RS.

As shown in FIG. **13**, the cross-section taken along line D-D in FIG. **11** is a cross-section of the plurality of blades **12** beside the rim **13** of the impeller **10**, that is, in the rim-side blade region **122***b* serving as the second region. This cross-section of the blades **12** beside the rim **13** is a second cross-section of the impeller **10** made by cutting through a portion of the impeller **10** close to the rim **13** along a second plane **72** perpendicular to the rotation shaft RS. Note here that the portion of the impeller **10** close to the rim **13** is for example a portion of the impeller **10** closer to the rim **13** than a middle point of the rim-side blade region **122***b* in the axial direction of the rotation shaft RS or a portion of the impeller **10** in which end portions of the blades **12** facing the rim **13** are located in the axial direction of the rotation shaft RS.

A basic configuration of the blades **12** in the second blade group **112***b* is similar to a basic configuration of the blades **12** in the first blade group **112***a*. That is, in FIG. **5**, a middle point MP of the impeller **10** indicates a middle point in the axial direction of the rotation shaft RS in the plurality of blades **12** constituting the second blade group **112***b*.

In the plurality of blades **12** constituting the second blade group **112***b*, a region from the middle point MP in the axial direction of the rotation shaft RS to the back plate **11** is a back-plate-side blade region **122***a* serving as a first region of the impeller **10**. Further, in the plurality of blades **12** constituting the second blade group **112***b*, a region from the middle point MP in the axial direction of the rotation shaft RS to an end portion of the second rim **13***b* is a rim-side blade region **122***b* serving as a second region of the impeller **10**.

Although the foregoing description assumes that a basic configuration of the first blade group **112***a* and a basic configuration of the second blade group **112***b* are similar to each other, a configuration of the impeller **10** is not limited to such a configuration but may be a configuration in which the first blade group **112***a* and the second blade group **112***b* are different from each other. Both or either the first blade group **112***a* and/or the second blade group **112***b* may have the configuration of the blades **12** to be described below.

As shown in FIGS. **11** to **13**, the plurality of blades **12** include a plurality of first blades **12**A and a plurality of second blades **12**B. The plurality of blades **12** include an alternate arrangement of a first blade **12**A and or more second blades **12**B along the circumferential direction of the impeller **10**.

As shown in FIGS. **4** and **12**, the impeller **10** has two second blades **12**B disposed between a first blade **12**A and a first blade **12**A disposed adjacent to the first blade **12**A in the direction of rotation R. Note, however, that the number of second blades **12**B that are disposed between a first blade **12**A and a first blade **12**A disposed adjacent to the first blade **12**A in the direction of rotation R is not limited to 2 but may be 1 or larger than or equal to 3. That is, at least one of the plurality of second blades **12**B is disposed between two of the plurality of first blades **12**A adjacent to each other along the circumferential direction.

As shown in FIG. **12**, in the first cross-section of the impeller **10** as taken along the first plane **71** perpendicular to the rotation shaft RS, each of the first blades **12**A has an inner circumferential end **14**A and an outer circumferential end **15**A. The inner circumferential end **14**A is located closer to the rotation shaft RS in the radial direction about the rotation shaft RS, and the outer circumferential end **15**A is located closer to the outer circumference than the inner circumferential end **14**A in the radial direction. In each of the plurality of first blades **12**A, the inner circumferential end **14**A is disposed in front of the outer circumferential end **15**A in the direction of rotation R of the impeller **10**.

As shown in FIG. **4**, the inner circumferential end **14**A serves as a leading edge **14**A**1** of the first blade **12**A, and the outer circumferential end **15**A serves as a trailing edge **15**A**1**

of the first blade **12**A. As shown in FIG. **12**, the impeller **10** has fourteen first blades **12**A disposed therein. However, the number of first blades **12**A is not limited to 14 but may be smaller or larger than 14.

As shown in FIG. **12**, in the first cross-section of the impeller **10** as taken along the first plane **71** perpendicular to the rotation shaft RS, each of the second blades **12**B has an inner circumferential end **14**B and an outer circumferential end **158**. The inner circumferential end **14**B is located closer to the rotation shaft RS in the radial direction about the rotation shaft RS, and the outer circumferential end **15**B is located closer to the outer circumference than the inner circumferential end **14**B in the radial direction. In each of the plurality of second blades **128**, the inner circumferential end **14**B is disposed in front of the outer circumferential end **15**B in the direction of rotation R of the impeller **10**.

As shown in FIG. **4**, the inner circumferential end **14**B serves as a leading edge **1481** of the second blade **12**B, and the outer circumferential end **158** serves as a trailing edge **1581** of the second blade **128**. As shown in FIG. **12**, the impeller **10** has twenty-eight second blades **128** disposed therein. However, the number of second blades **128** is not limited to 28 but may be smaller or larger than 28.

The following describes a relationship between the first blades **12**A and the second blades **12**B. As shown in FIGS. **4** and **13**, the blade length of each of portions of each of the first blades **12**A closer to the first rim **13***a* and the second rim **13***b* than the middle points MP in a direction along the rotation shaft RS is equal to the blade length of each of portions of each of the second blades **12**B closer to the first rim **13***a* and the second rim **13***b* than the middle points MP in the direction along the rotation shaft RS.

Meanwhile, as shown in FIGS. **4** and **12**, the blade length of a portion each of the first blades **12**A closer to the back plate **11** than the middle point MP in the direction along the rotation shaft RS is greater than the blade length of a portion of each of the second blades **12**B closer to the back plate **11** than the middle point MP in the direction along the rotation shaft RS, and increases toward the back plate **11**. Thus, in the present embodiment, the blade length of at least a portion of each of the first blades **12**A in the direction along the rotation shaft RS is greater than the blade length of at least a portion of each of the second blades **12**B in the direction along the rotation shaft RS. It should be noted that the term "blade length" here means the length of each of the first blades **12**A in the radial direction of the impeller **10** and the length of each of the second blades **12**B in the radial direction of the impeller **10**.

Let it be assumed that as shown in FIG. **12**, in the first cross-section closer to the back plate **11** than the middle point MP shown in FIG. **11**, the diameter of a circle C1 passing through the inner circumferential ends **14**A of the plurality of first blades **12**A about the rotation shaft RS, that is, the inside diameter of the first blades **12**A, is an inside diameter ID1. Let it be assumed that the diameter of a circle C3 passing through the outer circumferential ends **15**A of the plurality of first blades **12**A about the rotation shaft RS, that is, the outside diameter of the first blades **12**A, is an outside diameter OD1. One-half of the difference between the outside diameter OD1 and the inside diameter ID1 is equal to the blade length L1a of each of the first blades **12**A in the first cross-section (Blade Length L1a=(Outside Diameter OD1−Inside Diameter ID1)/2).

Note here that the ratio of the inside diameter to the outside diameter of the first blades **12**A is lower than or equal to 0.7. That is, the plurality of first blades **12**A are configured such that the ratio of the inside diameter ID1 constituted by the inner circumferential end **14**A of each of the plurality of first blades **12**A and to the outside diameter OD1 constituted by the outer circumferential end **15**A of each of the plurality of first blades **12**A is lower than or equal to 0.7.

It should be noted that in a common multi-blade air-sending device, the blade length of a blade in a cross-section perpendicular to a rotation shaft is shorter than the width dimension of a blade in a direction parallel with the rotation shaft. In the present embodiment too, the maximum blade length of each of the first blades **12**A, that is, the blade length of an end portion of each of the first blades **12**A close to the back plate **11**, is shorter than the width dimension W (see FIG. **11**) of each of the first blades **12**A in the direction parallel with the rotation shaft.

Further, let it also be assumed that in the first cross-section, the diameter of a circle C2 passing through the inner circumferential ends **14**B of the plurality of second blades **12**B about the rotation shaft RS, that is, the inside diameter of the second blades **12**B, is an inside diameter ID2 that is larger than the inside diameter ID1 (Inside Diameter ID2>Inside Diameter ID1). Let it be assumed that the diameter of the circle C3 passing through the outer circumferential ends **15**B of the plurality of second blades **12**B about the rotation shaft RS, that is, the outside diameter of the second blades **12**B, is an outside diameter OD2 that is equal to the outside diameter OD1 (Outside Diameter OD2=Outside Diameter OD1). One-half of the difference between the outside diameter OD2 and the inside diameter ID2 is equal to the blade length L2a of each of the second blades **12**B in the first cross-section (Blade Length L2a=(Outside Diameter OD2−Inside Diameter ID2)/2). The blade length L2a of each of the second blades **12**B in the first cross-section is shorter than the blade length L1a of each of the first blades **12**A in the same cross-section (Blade Length L2a<Blade Length L1a).

Note here that the ratio of the inside diameter to the outside diameter of the second blades **12**B is lower than or equal to 0.7. That is, the plurality of second blades **12**B are configured such that the ratio of the inside diameter ID2 constituted by the inner circumferential end **14**B of each of the plurality of second blades **12**B to the outside diameter OD2 constituted by the outer circumferential end **15**B of each of the plurality of second blades **12**B is lower than or equal to 0.7.

Meanwhile, let it be assumed that as shown in FIG. **13**, in the second cross-section closer to the rim **13** than the middle point MP shown in FIG. **11**, the diameter of a circle C7 passing through the inner circumferential ends **14**A of the first blades **12**A about the rotation shaft RS is an inside diameter ID3. The inside diameter ID3 is larger than the inside diameter ID1 of the first cross-section (Inside Diameter ID3>Inside Diameter ID1). Let it be assumed that the diameter of a circle C8 passing through the outer circumferential ends **15**A of the first blades **12**A about the rotation shaft RS is an outside diameter OD3. One-half of the difference between the outside diameter OD3 and the inside diameter ID1 is equal to the blade length Lib of each of the first blades **12**A in the second cross-section (Blade Length L1b=(Outside Diameter OD3−Inside Diameter ID3)/2).

Further, let it be assumed that in the second cross-section, the diameter of the circle C7 passing through the inner circumferential ends **14**B of the second blades **12**B about the rotation shaft RS is an inside diameter ID4. The inside diameter ID4 is equal to the inside diameter ID3 in the same cross-section (Inside Diameter ID4=Inside Diameter ID3). Let it be assumed that the diameter of the circle C8 passing

through the outer circumferential ends **15**B of the second blades **12**B about the rotation shaft RS is an outside diameter OD4. The outside diameter OD4 is equal to the outside diameter OD3 in the same cross-section (Outside Diameter OD4=Outside Diameter OD3). One-half of the difference between the outside diameter OD4 and the inside diameter ID4 is equal to the blade length L2b of each of the second blades **12**B in the second cross-section (Blade Length L2b=(Outside Diameter OD4−Inside Diameter ID4)/2). The blade length L2b of each of the second blades **12**B in the second cross-section is equal to the blade length L1b of each of the first blades **12**A in the same cross-section (Blade Length L2b=Blade Length L1b).

When viewed from an angle parallel with the rotation shaft RS, the first blades **12**A in the second cross-section shown in FIG. **13** overlap the first blades **12**A in the first cross-section shown in FIG. **12** so as not to extend off the contours of the first blades **12**A. For this reason, the impeller **10** satisfies the relationships "Outside Diameter OD3=Outside Diameter OD1", "Inside Diameter ID3≥Inside Diameter ID1", and "Blade Length L1b≤Blade Length L1a".

Similarly, when viewed from an angle parallel with the rotation shaft RS, the second blades **12**B in the second cross-section shown in FIG. **13** overlap the second blades **12**B in the first cross-section shown in FIG. **12** so as not to extend off the contours of the second blades **12**B. For this reason, the impeller **10** satisfies the relationships "Outside Diameter OD4=Outside Diameter OD2", "Inside Diameter ID4≥Inside Diameter ID2", and "Blade Length L2b≤Blade Length L2a".

Note here that as mentioned above, the ratio of the inside diameter ID1 to the outside diameter OD1 of the first blades **12**A is lower than or equal to 0.7. Since the blades **12** are configured such that Inside Diameter ID3≥Inside Diameter ID1, Inside Diameter ID4≥Inside Diameter ID2, and Inside Diameter ID2≥Inside Diameter ID1, the inside diameter of the first blades **12**A can be the blade inside diameter of the blades **12**. Further, since the blades **12** are configured such that Outside Diameter OD3=Outside Diameter OD1, Outside Diameter OD4=Outside Diameter OD2, and Outside Diameter OD2=Outside Diameter OD1, the outside diameter of the first blades **12**A can be the blade outside diameter of the blades **12**. Moreover, in a case in which the blades **12** constituting the impeller **10** are seen as a whole, the blades **12** are configured such that the ratio of the blade inside diameter to the blade outside diameter of the blades **12** is lower than or equal to 0.7.

It should be noted that the blade inside diameter of the plurality of blades **12** is constituted by the inner circumferential end of each of the plurality of blades **12**. That is, the blade inside diameter of the plurality of blades **12** is constituted by the leading edges **14A1** of the plurality of blades **12**. Further, the blade outside diameter of the plurality of blades **12** is constituted by the outer circumferential end of each of the plurality of blade **12**. That is, the blade outside diameter of the plurality of blades **12** is constituted by the trailing edges **15A1** and **15B1** of the plurality of blades **12**.

(Configuration of First Blades **12**A and Second Blades **12**B)

In a comparison between the first cross-section shown in FIG. **12** and the second cross-section shown in FIG. **13**, each of the first blades **12**A has the relationship "Blade Length L1a>Blade Length L1b". That is, each of the plurality of blades **12** is formed such that a blade length in the first region is longer than a blade length in the second region. More specifically, each of the first blades **12**A is formed such that its blade length decreases from the back plate **11** toward the rim **13** in the axial direction of the rotation shaft RS.

Similarly, in a comparison between the first cross-section shown in FIG. **12** and the second cross-section shown in FIG. **13**, each of the second blades **12**B has the relationship "Blade Length L2a>Blade Length L2b". That is, each of the second blades **12**B is formed such that the blade length decreases from the back plate **11** toward the rim **13** in the axial direction of the rotation shaft RS.

As shown in FIG. **3**, the leading edges of the first blades **12**A and the second blades **12**B are inclined such that the blade inside diameter increases from the back plate **11** toward the rim **13**. That is, the plurality of blades **12** are formed such that the blade inside diameter increases from the back plate **11** toward the rim **13**, and form an inclined portion **141**A inclined such that the inner circumferential ends **14**A constituting the leading edges **14A1** extend away from the rotation shaft RS. Similarly, the plurality of blades **12** are formed such that the blade inside diameter increases from the back plate **11** toward the rim **13**, and form an inclined portion **141**B inclined such that the inner circumferential ends **14**B constituting the leading edges **14B1** extend away from the rotation shaft RS.

(Sirocco Blade Portion and Turbo Blade Portion)

As shown in FIGS. **12** and **13**, each of the first blades **12**A has a first sirocco blade portion **12A1** being forward-swept and including the outer circumferential end **15**A and a first turbo blade portion **12A2** being swept-back and including the inner circumferential end **14**A. In the radial direction of the impeller **10**, the first sirocco blade portion **12A1** constitutes an outer circumference of the first blade **12**A, and the first turbo blade portion **12A2** constitutes an inner circumference of the first blade **12**A. That is, each of the first blades **12**A is configured such that the first turbo blade portion **12A2** and the first sirocco blade portion **12A1** are arranged in this order from the rotation shaft RS toward the outer circumference in the radial direction of the impeller **10**.

In each of the first blades **12**A, the first turbo blade portion **12A2** and the first sirocco blade portion **12A1** are integrally formed. The first turbo blade portion **12A2** constitutes the leading edge **14A1** of the first blade **12**A, and the first sirocco blade portion **12A1** constitutes the trailing edge **15A1** of the first blade **12**A. In the radial direction of the impeller **10**, the first turbo blade portion **12A2** linearly extends from the inner circumferential end **14**A constituting the leading edge **14A1** toward the outer circumference.

In the radial direction of the impeller **10**, a region constituting the first sirocco blade portion **12A1** of each of the first blades **12**A is defined as a first sirocco region **12A11**, and a region constituting the first turbo blade portion **12A2** of each of the first blades **12**A is defined as a first turbo region **12A21**. Each of the first blades **12**A is configured such that the first turbo region **12A21** is larger than the first sirocco region **12A11** in the radial direction of the impeller **10**.

In both the back-plate-side blade region **122***a* serving as the first region and the rim-side blade region **122***b* serving as the second region, the impeller **10** has the relationship "First Sirocco Region **12A11**<First Turbo Region **12A21**" in the radial direction of the impeller **10**. The impeller **10** and each of the first blades **12**A are configured such that in both the back-plate-side blade region **122***a* serving as the first region and the rim-side blade region **122***b* serving as the second region, a ratio of the first turbo blade portion **12A2** is larger than a ratio of the first sirocco blade portion **12A1** in the radial direction of the impeller **10**.

Similarly, as shown in FIGS. **12** and **13**, each of the second blades **12**B has a second sirocco blade portion **12**B**1** being forward-swept and including the outer circumferential end **15**B and a second turbo blade portion **12**B**2** being swept-back and including the inner circumferential end **14**B. In the radial direction of the impeller **10**, the second sirocco blade portion **12**B**1** constitutes an outer circumference of the second blade **12**B, and the second turbo blade portion **12**B**2** constitutes an inner circumference of the second blade **12**B. That is, each of the second blades **12**B is configured such that the second turbo blade portion **12**B**2** and the second sirocco blade portion **12**B**1** are arranged in this order from the rotation shaft RS toward the outer circumference in the radial direction of the impeller **10**.

In each of the second blades **12**B, the second turbo blade portion **12**B**2** and the second sirocco blade portion **12**B**1** are integrally formed. The second turbo blade portion **12**B**2** constitutes the leading edge **14**B**1** of the second blade **12**B, and the second sirocco blade portion **12**B**1** constitutes the trailing edge **15**B**1** of the second blade **12**B. In the radial direction of the impeller **10**, the second turbo blade portion **12**B**2** linearly extends from the inner circumferential end **14**B constituting the leading edge **14**B**1** toward the outer circumference.

In the radial direction of the impeller **10**, a region constituting the second sirocco blade portion **12**B**1** of each of the second blades **12**B is defined as a second sirocco region **12**B**11**, and a region constituting the second turbo blade portion **12**B**2** of each of the second blades **12**B is defined as a second turbo region **12**B**21**. Each of the second blades **12**B is configured such that the second turbo region **12**B**21** is larger than the second sirocco region **12**B**11** in the radial direction of the impeller **10**.

In both the back-plate-side blade region **122***a* serving as the first region and the rim-side blade region **122***b* serving as the second region, the impeller **10** has the relationship "Second Sirocco Region **12**B**11**<Second Turbo Region **12**B**21**" in the radial direction of the impeller **10**. The impeller **10** and each of the second blades **12**B are configured such that in both the back-plate-side blade region **122***a* serving as the first region and the rim-side blade region **122***b* serving as the second region, a ratio of the second turbo blade portion **12**B**2** is larger than a ratio of the second sirocco blade portion **12**B**1** in the radial direction of the impeller **10**.

According to the foregoing configuration, the plurality of blades **12** are configured such that in both the back-plate-side blade region **122***a* and the rim-side blade region **122***b*, a region of a turbo blade portion is larger than a region of a sirocco blade portion in the radial direction of the impeller **10**. That is, the plurality of blades **12** are configured such that in both the back-plate-side blade region **122***a* and the rim-side blade region **122***b*, a ratio of the turbo blade portion is larger than a ratio of the sirocco blade portion in the radial direction of the impeller **10**, and have the relationship "Sirocco Region<Turbo Region". In other words, each of the plurality of blades **12** is configured such that in the first region and the second region, a ratio of the turbo blade portion in the radial direction is larger than a ratio of the sirocco blade portion in the radial direction.

The plurality of blades **12** are not limited to being configured such that in both the back-plate-side blade region **122***a* and the rim-side blade region **122***b*, a ratio of the turbo blade portion is larger than a ratio of the sirocco blade portion in the radial direction of the impeller **10**, or to having the relationship "Sirocco Region<Turbo Region". Each of the plurality of blades **12** may be configured such that in the first region and the second region, a ratio of the turbo blade portion in the radial direction is equal to or smaller than a ratio of the sirocco blade portion in the radial direction.

(Blade Outlet Angle)

Let it be assumed that as shown in FIG. **12**, a blade outlet angle of the first sirocco blade portion **12**A**1** of each of the first blades **12**A in the first cross-section is a blade outlet angle $\alpha 1$. The blade outlet angle $\alpha 1$ is defined as an angle formed by a tangent line TL1 and a center line CL1 of the first sirocco blade portion **12**A**1** at the outer circumferential end **15**A at an intersection of a segment of the circle C3 about the rotation shaft RS and the outer circumferential end **15**A. This blade outlet angle $\alpha 1$ is an angle of larger than 90 degrees.

Let it be assumed that a blade outlet angle of the second sirocco blade portion **12**B**1** of each of the second blades **12**B in the same cross-section is a blade outlet angle $\alpha 2$. The blade outlet angle $\alpha 2$ is defined as an angle formed by a tangent line TL2 and a center line CL2 of the second sirocco blade portion **12**B**1** at the outer circumferential end **15**B at an intersection of a segment of the circle C3 about the rotation shaft RS and the outer circumferential end **15**B. The blade outlet angle $\alpha 2$ is an angle of larger than 90 degrees.

The blade outlet angle $\alpha 2$ of the second sirocco blade portion **12**B**1** is equal to the blade outlet angle $\alpha 1$ of the first sirocco blade portion **12**A**1** (Blade Outlet Angle $\alpha 2$=Blade Outlet Angle $\alpha 1$). The first sirocco blade portion **12**A**1** and the second sirocco blade portion **12**B**1** are formed in arcs to curve out in a direction opposite to the direction of rotation R when viewed from an angle parallel with the rotation shaft RS.

As shown in FIG. **13**, the impeller **10** is configured such that in the second cross-section, too, the blade outlet angle $\alpha 1$ of the first sirocco blade portion **12**A**1** and the blade outlet angle $\alpha 2$ of the second sirocco blade portion **12**B**1** are equal to each other. That is, each of the plurality of blades **12** has a sirocco blade portion being forward-swept and extending from the back plate **11** to the rim **13** and having a blade outlet angle of larger than 90 degrees.

Further, let it be assumed that as shown in FIG. **12**, a blade outlet angle of the first turbo blade portion **12**A**2** of each of the first blades **12**A in the first cross-section is a blade outlet angle $\beta 1$. The blade outlet angle $\beta 1$ is defined as an angle formed by a tangent line TL3 and a center line CL3 of the first turbo blade portion **12**A**2** at an intersection of a segment of a circle C4 about the rotation shaft RS and the first turbo blade portion **12**A**2**. This blade outlet angle $\beta 1$ is an angle of smaller than 90 degrees.

Let it be assumed that a blade outlet angle of the second turbo blade portion **12**B**2** of each of the second blades **12**B in the same cross-section is a blade outlet angle $\beta 2$. The blade outlet angle $\beta 2$ is defined as an angle formed by a tangent line TL4 and a center line CL4 of the second turbo blade portion **12**B**2** at an intersection of a segment of the circle C4 about the rotation shaft RS and the second turbo blade portion **12**B**2**. The blade outlet angle $\beta 2$ is an angle of smaller than 90 degrees.

The blade outlet angle $\beta 2$ of the second turbo blade portion **12**B**2** is equal to the blade outlet angle $\beta 1$ of the first turbo blade portion **12**A**2** (Blade Outlet Angle $\beta 2$=Blade Outlet Angle $\beta 1$).

Although not illustrated in FIG. **13**, the impeller **10** is configured such that in the second cross-section, too, the blade outlet angle $\beta 1$ of the first turbo blade portion **12**A**2** and the blade outlet angle $\beta 2$ of the second turbo blade

portion **12**B**2** are equal to each other. Further, the blade outlet angle β1 and the blade outlet angle β2 are angles of smaller than 90 degrees.

(Radial Blade Portion)

As shown in FIGS. **12** and **13**, each of the first blades **12**A has a first radial blade portion **12**A**3** serving as a portion of connection between the first turbo blade portion **12**A**2** and the first sirocco blade portion **12**A**1**. The first radial blade portion **12**A**3** is a portion configured to be a radial blade linearly extending in the radial direction of the impeller **10**.

Similarly, each of the second blades **12**B has a second radial blade portion **12**B**3** serving as a portion of connection between the second turbo blade portion **12**B**2** and the second sirocco blade portion **12**B**1**. The second radial blade portion **12**B**3** is a portion configured to be a radial blade linearly extending in the radial direction of the impeller **10**.

The first radial blade portion **12**A**3** and the second radial blade portion **12**B**3** each have a blade angle of 90 degrees. More specifically, an angle formed by a tangent line at an intersection of a center line of the first radial blade portion **12**A**3** and a circle C5 about the rotation shaft RS and the center line of the first radial blade portion **12**A**3** is 90 degrees. Further, an angle formed by a tangent line at an intersection of a center line of the second radial blade portion **12**B**3** and the circle C5 about the rotation shaft RS and the center line of the second radial blade portion **12**B**3** is 90 degrees.

(Inter-Blade Distance)

When a spacing between two of the plurality of blades **12** adjacent to each other along the circumferential direction is defined as an inter-blade distance, the inter-blade distance between a plurality of blades **12** widens from the leading edges **14**A**1** toward the trailing edges **15**A**1** as shown in FIGS. **12** and **13**. Similarly, the inter-blade distance between a plurality of blades **12** widens from the leading edges **14**B**1** toward the trailing edges **15**B**1**.

Specifically, an inter-blade distance in the turbo blade portion constituted by the first turbo blade portion **12**A**2** and the second turbo blade portion **12**B**2** widens from the inner circumference toward the outer circumference. Moreover, an inter-blade distance in a sirocco blade portion constituted by a first sirocco blade portion **12**A**1** and a second sirocco blade portion **12**B**1** is wider than the inter-blade distance in the turbo blade portion and widens from the inner circumference toward the outer circumference.

That is, an inter-blade distance between a first turbo blade portion **12**A**2** and a second turbo blade portion **12**B**2** or an inter-blade distance between adjacent second turbo blade portions **12**B**2** widens from the inner circumference toward the outer circumference. Further, an inter-blade distance between a first sirocco blade portion **12**A**1** and a second sirocco blade portion **12**B**1** or an inter-blade distance between adjacent second sirocco blade portions **12**B**1** is wider than the inter-blade distance in the turbo blade portion and widens from the inner circumference toward the outer circumference.

(Relationship Between Impeller **10** and Scroll Casing **40**)

FIG. **14** is a schematic view showing a relationship between the impeller **10** and bellmouths **46** in a cross-section of the multi-blade air-sending device **100** as taken along line A-A in FIG. **2**. FIG. **15** is a schematic view showing a relationship between blades **12** and a bellmouth **46** as viewed from an angle parallel with the rotation shaft RS in a second cross-section of the impeller **10** in FIG. **14**.

As shown in FIGS. **14** and **15**, a blade outside diameter OD constituted by the outer circumferential end of each of the plurality of blades **12** is larger than the inside diameter BI of a bellmouth **46** constituting the scroll casing **40**. It should be noted that the blade outside diameter OD of the plurality of blades **12** is equal to the outside diameters OD1 and OD2 of the first blades **12**A and the outside diameter OD3 and OD4 of the second blades **12**B (Blade Outside Diameter OD=Outside Diameter OD1=Outside Diameter OD2=Outside Diameter OD3=Outside Diameter OD4).

The impeller **10** is configured such that the first turbo region **12**A**21** is larger than the first sirocco region **12**A**11** in the radial direction with respect to the rotation shaft RS. That is, the impeller **10** and each of the first blades **12**A are configured such that the ratio of the first turbo blade portion **12**A**2** is larger than the ratio of the first sirocco blade portion **12**A**1** in the radial direction with respect to the rotation shaft RS, and have the relationship "First Sirocco Blade Portion **12**A**1**<First Turbo Blade Portion **12**A**2**". The relationship between the ratio of the first sirocco blade portion **12**A**1** and the ratio of the first turbo blade portion **12**A**2** in the radial direction of the rotation shaft RS holds in both the back-plate-side blade region **122***a* serving as the first region and the rim-side blade region **122***b* serving as the second region.

It should be noted that the impeller **10** and each of the first blades **12**A are not limited to being configured such that the ratio of the first turbo blade portion **12**A**2** is larger than the ratio of the first sirocco blade portion **12**A**1** in the radial direction with respect to the rotation shaft RS, or to having the relationship "First Sirocco Blade Portion **12**A**1**<First Turbo Blade Portion **12**A**2**". The impeller **10** and each of the first blades **12**A may be formed such that the ratio of the first turbo blade portion **12**A**2** is equal to or smaller than the ratio of the first sirocco blade portion **12**A**1** in the radial direction with respect to the rotation shaft RS.

Furthermore, a region of portions of the plurality of blades **12** situated closer to the outer circumference than the inside diameter BI of the bellmouth **46** in the radial direction with respect to the rotation shaft RS when viewed from an angle parallel with the rotation shaft RS is defined as an outer circumferential region **12**R. It is desirable that the impeller **10** be configured such that in the outer circumferential region **12**R, too, the ratio of the first turbo blade portion **12**A**2** is larger than the ratio of the first sirocco blade portion **12**A**1**. That is, in the outer circumferential region **12**R of the impeller **10** situated closer to the outer circumference than the inside diameter BI of the bellmouth **46** when viewed from an angle parallel with the rotation shaft RS, a first turbo region **12**A**21***a* is larger than the first sirocco region **12**A**11** in the radial direction with respect to the rotation shaft RS.

The first turbo region **12**A**21***a* is a region of the first turbo region **12**A**21** situated closer to the outer circumference than the inside diameter BI of the bellmouth **46** when viewed from an angle parallel with the rotation shaft RS. Moreover, in a case in which a first turbo blade portion **12**A**2** constituting the first turbo region **12**A**21***a* is a first turbo blade portion **12**A**2***a*, it is desirable that the outer circumferential region **12**R of the impeller **10** be configured such that a ratio of the first turbo blade portion **12**A**2***a* is larger than the ratio of the first sirocco blade portion **12**A**1**. The relationship between the ratio of the first sirocco blade portion **12**A**1** and the ratio of the first turbo blade portion **12**A**2***a* in the outer circumferential region **12**R holds in both the back-plate-side blade region **122***a* serving as the first region and the rim-side blade region **122***b* serving as the second region.

Similarly, the impeller **10** is configured such that the second turbo region **12**B**21** is larger than the second sirocco region **12**B**11** in the radial direction with respect to the rotation shaft RS. That is, the impeller **10** and each of the second blades **12**B are configured such that the ratio of the

second turbo blade portion **12**B**2** is larger than the ratio of the second sirocco blade portion **12**B**1** in the radial direction with respect to the rotation shaft RS, and have the relationship "Second Sirocco Blade Portion **12**B**1**<Second Turbo Blade Portion **12**B**2**". The relationship between the ratio of the second sirocco blade portion **12**B**1** and the ratio of the second turbo blade portion **12**B**2** in the radial direction of the rotation shaft RS holds in both the back-plate-side blade region **122***a* serving as the first region and the rim-side blade region **122***b* serving as the second region.

It should be noted that the impeller **10** and each of the second blades **12**B are not limited to being configured such that the ratio of the second turbo blade portion **12**B**2** is larger than the ratio of the second sirocco blade portion **12**B**1** in the radial direction with respect to the rotation shaft RS, or to having the relationship "Second Sirocco Blade Portion **12**B**1**<Second Turbo Blade Portion **12**B**2**". The impeller **10** and each of the second blades **12**B may be formed such that the ratio of the second turbo blade portion **12**B**2** is equal to or smaller than the ratio of the second sirocco blade portion **12**B**1** in the radial direction with respect to the rotation shaft RS.

Furthermore, it is desirable that the impeller **10** be configured such that in the outer circumferential region **12**R, too, the ratio of the second turbo blade portion **12**B**2** is larger than the ratio of the second sirocco blade portion **12**B**1**. That is, in the outer circumferential region **12**R of the impeller **10** situated closer to the outer circumference than the inside diameter BI of the bellmouth **46** when viewed from an angle parallel with the rotation shaft RS, a second turbo region **12**B**21***a* is larger than the second sirocco region **12**B**11** in the radial direction with respect to the rotation shaft RS.

The second turbo region **12**B**21***a* is a region of the second turbo region **12**B**21** situated closer to the outer circumference than the inside diameter BI of the bellmouth **46** when viewed from an angle parallel with the rotation shaft RS. Moreover, in a case in which a second turbo blade portion **12**B**2** constituting the second turbo region **12**B**21***a* is a second turbo blade portion **12**B**2***a*, it is desirable that the outer circumferential region **12**R of the impeller **10** be configured such that a ratio of the second turbo blade portion **12**B**2***a* is larger than the ratio of the second sirocco blade portion **12**B**1**. The relationship between the ratio of the second sirocco blade portion **12**B**1** and the ratio of the second turbo blade portion **12**B**2***a* in the outer circumferential region **12**R holds in both the back-plate-side blade region **122***a* serving as the first region and the rim-side blade region **122***b* serving as the second region.

FIG. **16** is a schematic view showing a relationship between the impeller **10** and the bellmouths **46** in the cross-section of the multi-blade air-sending device **100** as taken along line A-A in FIG. **2**. FIG. **17** is a schematic view showing a relationship between the blades **12** and a bellmouth **46** as viewed from an angle in parallel with the rotation shaft RS in the impeller **10** in FIG. **16**. In FIG. **16**, the outline arrow L indicates a direction from which the impeller **10** is viewed from an angle parallel with the rotation shaft RS.

As shown in FIGS. **16** and **17**, a circle passing through the inner circumferential ends **14**A of the plurality of first blades **12**A about the rotation shaft RS at connecting locations between the first blades **12**A and the back plate **11** when viewed from an angle parallel with the rotation shaft RS is defined as a circle C1a. Moreover, let it be assumed that the diameter of the circle C1a, that is, the inside diameter of the first blades **12**A at the connecting locations between the first blades **12**A and the back plate **11**, is an inside diameter ID1a.

Further, a circle passing through the inner circumferential ends **14**B of the plurality of second blades **12**B about the rotation shaft RS at connecting locations between the second blades **12**B and the back plate **11** when viewed from an angle parallel with the rotation shaft RS is defined as a circle C2a. Moreover, let it be assumed that the diameter of the circle C2a, that is, the inside diameter of the second blades **12**B at the connecting locations between the first blades **12**A and the back plate **11**, is an inside diameter ID2a. The inside diameter ID2a is larger than the inside diameter ID1a (Inside Diameter ID2a>Inside Diameter ID1a).

Further, let it be assumed that the diameter of a circle C3a passing through the outer circumferential ends **15**A of the plurality of first blades **12**A and the outer circumferential ends **15**B of the plurality of second blades **12**B about the rotation shaft RS when viewed from an angle parallel with the rotation shaft RS, that is, the outside diameter of the plurality of blades **12**, is a blade outside diameter OD.

Further, a circle passing through the inner circumferential ends **14**A of the plurality of first blades **12**A about the rotation shaft RS at connecting locations between the first blades **12**A and the rim **13** when viewed from an angle parallel with the rotation shaft RS is defined as a circle C7a. Moreover, let it be assumed that the diameter of the circle C7a, that is, the inside diameter of the first blades **12**A at the connecting locations between the first blades **12**A and the rim **13**, is an inside diameter ID3a.

Further, a circle passing through the inner circumferential ends **14**B of the plurality of second blades **12**B about the rotation shaft RS at connecting locations between the second blades **12**B and the rim **13** when viewed from an angle parallel with the rotation shaft RS is the circle C7a. Moreover, let it be assumed that the diameter of the circle C7a, that is, the inside diameter of the second blades **12**B at the connecting locations between the second blades **12**B and the rim **13**, is an inside diameter ID4a.

As shown in FIGS. **16** and **17**, the inside diameter BI of the bellmouth **46** is located in a region of the first turbo blade portions **12**A**2** and the second turbo blade portions **12**B**2** between the inside diameter ID1a of the first blades **12**A beside the back plate **11** and the inside diameter ID3a of the first blades **12**A beside the rim **13** when viewed from an angle parallel with the rotation shaft RS. More specifically, the inside diameter BI of the bellmouth **46** is larger than the inside diameter ID1a of the first blades **12**A beside the back plate **11** and smaller than the inside diameter ID3a of the first blades **12**A beside the rim **13**.

That is, the inside diameter BI of the bellmouth **46** is larger than the blade inside diameter of the plurality of blades **12** beside the back plate **11** and smaller than the blade inside diameter of the plurality of blades **12** beside the rim **13**. In other words, an opening **46***a* forming the inside diameter BI of the bellmouth **46** is located in a region of the first turbo blade portions **12**A**2** and the second turbo blade portions **12**B**2** between the circle C1a and the circle C7a when viewed from an angle parallel with the rotation shaft RS.

Further, as shown in FIGS. **16** and **17**, the inside diameter BI of the bellmouth **46** is located in a region of the first turbo blade portions **12**A**2** and the second turbo blade portions **12**B**2** between the inside diameter ID2a of the second blades **12**B beside the back plate **11** and the inside diameter ID4a of the second blades **12**B beside the rim **13** when viewed from an angle parallel with the rotation shaft RS. More specifically, the inside diameter BI of the bellmouth **46** is larger than the inside diameter ID2a of the second blades

12B beside the back plate **11** and smaller than the inside diameter ID4a of the second blades **12**B beside the rim **13**.

That is, the inside diameter BI of the bellmouth **46** is larger than the blade inside diameter of the plurality of blades **12** beside the back plate **11** and smaller than the blade inside diameter of the plurality of blades **12** beside the rim **13**. More specifically, the inside diameter BI of the bellmouth **46** is larger than a blade inside diameter constituted by the inner circumferential end of each of the plurality of blades **12** in the first region and smaller than a blade inside diameter constituted by the inner circumferential end of each of the plurality of blades **12** in the second region. In other words, the opening **46***a* forming the inside diameter BI of the bellmouth **46** is located in a region of the first turbo blade portions **12**A**2** and the second turbo blade portions **12**B**2** between the circle C2a and the circle C7a when viewed from an angle parallel with the rotation shaft RS.

Let it be assumed that as shown in FIGS. **16** and **17**, in the radial direction of the impeller **10**, a radial length of each of the first and second sirocco blade portions **12**A**1** and **12**B**1** is a distance SL. Further, let it be assumed that in the multi-blade air-sending device **100**, the shortest distance between the plurality of blades **12** of the impeller **10** and the peripheral wall **44***c* of the scroll casing **40** is a distance MS. In this case, the multi-blade air-sending device **100** is configured such that the distance MS is more than twice as long as the distance SL (Distance MS>Distance SL×2). Although the distance MS is shown in the A-A section of the multi-blade air-sending device **100** in FIG. **16**, the distance MS is the shortest distance from the peripheral wall **44***c* of the scroll casing **40** and is not necessarily shown on the A-A section.

[Working Effects of Impeller **10** and Multi-Blade Air-Sending Device **100**]

The back plate **11** includes a first surface portion **11***a* on which the plurality of blades **12** are formed and a second surface portion **11***c* provided at a region between the boss **11***b* and the first surface portion **11***a* and depressed from the first surface portion **11***a* in an axial direction of the rotation shaft RS. Further, the back plate **11** also includes a plurality of projections **20** provided at the second surface portion **11***c* and extending in the axial direction of the rotation shaft RS. While the impeller **10** is rotating, the projections **20** draw in a flow of gas by generating negative pressure on a surface of the impeller **10** facing in a direction opposite to a direction of rotation R of the impeller **10**, making it possible to increase the amount of air that is suctioned into the impeller **10**. Further, the impeller **10** includes the second surface portion **11***c* depressed from the first surface portion **11***a*, on which the plurality of blades **12** are formed, in the axial direction of the rotation shaft RS, and the projections **20** are provided at the second surface portion **11***c*. This inhibits a flow of gas produced by the projections **20** from flowing from the second surface portion **11***c* into the first surface portion **11***a*. Moreover, the flow of gas produced by the projections **20** has its centrifugally-outward force of wind broken by a step **11***f* between the first surface portion **11***a* and the second surface portion **11***c*, so that the impeller **10** does not suffer from turbulence in the flow of gas on the inner circumference of the blades **12**. This allows the impeller **10** to have higher air-sending efficiency than in a case in which the impeller **10** does not include the projections **20** or the second surface portion **11***c*.

Further, the flow of gas produced by the projections **20** has its centrifugally-outward force of wind broken by the step **11***f* between the first surface portion **11***a* and the second surface portion **11***c*, so that the impeller **10** does not suffer from turbulence in the flow of gas on the inner circumference of the blades **12**. This allows the impeller **10** to reduce noise caused by turbulence in the flow of gas.

Further, the second surface portion **11***c* is formed in a circular ring shape about the boss **11***b*. This inhibits a flow of gas produced by the projections **20** from flowing from the second surface portion **11***c* into the first surface portion **11***a*. Moreover, the flow of gas produced by the projections **20** has its centrifugally-outward force of wind broken by the step **11***f* between the first surface portion **11***a* and the second surface portion **11***c*, so that the impeller **10** does not suffer from turbulence in the flow of gas on the inner circumference of the blades **12**. This allows the impeller **10** to have improved air-sending efficiency. Further, with the second surface portion **11***c* formed in a circular ring shape about the boss **11***b*, the impeller **10** makes it possible to break the centrifugally-outward force of wind at any place along the circumferential direction about the boss **11***b*. Further, since the second surface portion **11***c* is formed in a circular ring shape about the boss **11***b*, the impeller **10** is more easily manufactured than in a case in which the second surface portion **11***c* is complex in structure. Further, since the second surface portion **11***c* is formed in a circular ring shape about the boss **11***b*, the impeller **10** more easily keeps its balance and is more easily manufactured than in a case in which the second surface portion **11***c* is complex in structure.

Further, the length of a depression outside diameter PO constituted by the outer circumferential edge **11***c***1** of the second surface portion **11***c* is greater than the magnitude of a difference PS between an inside diameter ID1 of the blades **12** constituted by an inner circumferential end **14**A of each of the plurality of blades **12** and the depression outside diameter PO. Therefore, the impeller **10** can be configured such that the projections **20**, which draw in a flow of gas, are formed to extend from the boss **11***b* to the vicinity of the inside diameter of the blades **12** in a radial direction. This results in allowing the impeller **10** to suction a larger amount of air with the projections **20** than in a case in which the impeller **10** does not include the projections **20** and to have improved air-sending efficiency.

The plurality of projections **20** are provided in a radial fashion about the rotation shaft RS, and each of the plurality of projections **20** extends in a radial direction about the rotation shaft RS. While the impeller **10** is rotating, the projections **20** draw in a flow of gas by generating negative pressure on the surface of the impeller **10** facing in a direction opposite to the direction of rotation R of the impeller **10**, making it possible to increase the amount of air that is suctioned into the impeller **10**. By being formed in this configuration, the plurality of projections **20** make it easier to manufacture the impeller **10** than in a case in which the projections **20** are complex in structure. Further, by being formed in this configuration, the plurality of projections **20** make it easier to keep the balance of the impeller **10** and make it easier to manufacture the impeller **10** than in a case in which the projections **20** are complex in structure.

Further, each of the plurality of projections **20** is formed in the shape of a plate rising from the second surface portion **11***c*. While the impeller **10** is rotating, the projections **20** make it easy to generate negative pressure on the surface of the impeller **10** facing in a direction opposite to the direction of rotation R of the impeller **10** and make it even easier to draw in a flow of gas, thereby making it possible to further increase the amount of air that is suctioned into the impeller **10**.

Further, each of the plurality of projections **20** is connected to an outer circumferential wall **11***b***2** of the boss **11***b*.

Since the impeller **10** is configured such that the projections **20** are connected to the boss **11***b*, the strength of the projections **20** can be improved. Further, since the impeller **10** is configured such that the projections **20** are connected to the boss **11***b*, the strength of the impeller **10** can be improved.

Further, a projection outer circumferential end **21** of each of the projections **20** does not project from the first surface portion **11***a* in the axial direction of the rotation shaft RS. Therefore, even when the projections **20** are connected to the step **11***f*, the flow of gas produced by the projections **20** has its centrifugally-outward force of wind broken by the step **11***f* between the first surface portion **11***a* and the second surface portion **11***c*, so that the impeller **10** does not suffer from turbulence in the flow of gas on the inner circumference of the blades **12**. This allows the impeller **10** to have higher air-sending efficiency than in a case in which the impeller **10** does not include the projections **20** or the second surface portion **11***c*.

Further, the length of a projection outside diameter QO constituted by the projection outer circumferential end **21** of each of the plurality of projections **20** is greater than the magnitude of a difference QS between the inside diameter ID1 of the blades **12** constituted by the inner circumferential end **14**A of each of the plurality of blades **12** and the projection outside diameter QO. Therefore, the impeller **10** can be configured such that the projections **20**, which draw in a flow of gas, are formed to extend from the boss **11***b* to the vicinity of the inside diameter of the blades **12** in a radial direction. This results in allowing the impeller **10** to suction a larger amount of air with the projections **20** than in a case in which the impeller **10** does not include the projections **20** and to have improved air-sending efficiency.

Further, each of the plurality of projections **20** includes an inclined portion **26***a* whose ridge line is inclined such that the height of the inclined portion **26***a* in the axial direction of the rotation shaft RS decreases from the inner circumference toward the outer circumference. While the impeller **10** is rotating, the projections **20** draw in a flow of gas by generating negative pressure on the surface of the impeller **10** facing in a direction opposite to the direction of rotation R of the impeller **10**, making it possible to increase the amount of air that is suctioned into the impeller **10**. In so doing, the impeller **10** is higher in wind speed on the outer circumference than on the inner circumference, and an increase in height of projections **20** on the outer circumference leads to an increase in the amount of a flow of gas that is generated on the outer circumference of the projections **20**, which may cause turbulence in the flow of gas on the inner circumference of the blades **12**. On the other hand, since the impeller **10** is lower in wind speed on the inner circumference than on the outer circumference, an increase in the amount of a flow of gas that is generated on the inner circumference of the projections **20** does not cause turbulence in the flow of gas by the blades **12**. This allows the impeller **10** to suction a further increased amount of a flow of gas and to have improved air-sending efficiency by reducing turbulence in the flow of gas. Further, in a case in which the projections **20** are connected to the boss **11***b*, making the projections **20** higher on the inner circumference than on the outer circumference makes it possible to increase an area of integration of the projections **20** and the boss **11***b*, making it possible to further improve the strength of the impeller **10**.

Further, the back plate **11** includes a reinforcing portion **30** provided at the second surface portion **11***c* and extending in the axial direction of the rotation shaft RS, and the reinforcing portion **30** connects the plurality of projections **20** to each other along the circumferential direction. Since the impeller **10** is configured such that the reinforcing portion **30** and the projections **20** are connected to each other, the strength of the projections **20** can be improved. Further, since the impeller **10** is configured such that the reinforcing portion **30** and the projections **20** are connected to each other, the strength of the impeller **10** can be improved. Further, the reinforcing portion **30** makes it possible to reduce wind currents produced by the projections **20** and flowing in the radial direction and break the force of the wind blowing from the boss **11***b* toward the blades **12**.

Further, a plurality of the reinforcing portions **30** are provided in the radial direction about the rotation shaft RS. Since the impeller **10** is configured such that the projections **20** and the plurality of reinforcing portions **30** are connected to each other, the strengths of the projections **20** and the impeller **10** can be further improved. Further, the plurality of reinforcing portions **30** make it possible to further reduce wind currents produced by the projections **20** and flowing in the radial direction and further break the force of the wind blowing from the boss **11***b* toward the blades **12**. With the second surface portion **11***c* having a wide area in the radial direction, the impeller **10** increases in volume of air that is suctioned into the impeller **10**. Narrowing the area of the second surface portion **11***c* in the radial direction by providing the plurality of reinforcing portions **30** allows the impeller **10** to adjust the volume of air that is suctioned into the impeller **10**.

Further, the second surface portion **11***c* is constituted by a plate whose thickness is thinner than the thickness of a plate constituting the first surface portion **11***a*. Varying plate thicknesses of the back plate **11** of the impeller **10** make it possible to form the first surface portion **11***a* and the second surface portion **11***c*, making it easier to manufacture the impeller **10** than in a case in which a relationship between the first surface portion **11***a* and the second surface portion **11***c* is complex in structure.

Further, the back plate **11** has its first and second surface portions **11***a* and **11***c* on both plate sides of the back plate **11**, and each of the second surface portions **11***c* formed on both plate sides of the back plate **11** includes the plurality of projections **20**. This allows the impeller **10** to exert the aforementioned effects not only as a single-suction impeller **10** having a plurality of blades **12** formed only on one side of a back plate **11** but also as a double-suction impeller **10** having a plurality of blades **12** formed on both sides of a back plate **11**.

The impeller **10** is configured such that in the first and second regions of the impeller **10**, a ratio of the turbo blade portion in the radial direction is larger than a ratio of the sirocco blade portion in the radial direction. Since the impeller **10** is configured such that the ratio of the turbo blade portion is high in any region between the back plate **11** and the rim **13**, sufficient pressure recovery can be achieved through the plurality of blades **12**. This allows the impeller **10** to better improve pressure recovery than an impeller that does not include such a configuration. This results in allowing the impeller **10** to improve the efficiency of the multi-blade air-sending device **100**. Furthermore, by including the foregoing configuration, the impeller **10** can reduce leading edge separation of a flow of gas beside the rim **13**.

Further, a multi-blade air-sending device **100** includes the impeller **10** thus configured. The multi-blade air-sending device **100** includes a scroll casing **40** housing the impeller **10** and having a peripheral wall **44***c* formed into a volute shape and a side wall **44***a* having a bellmouth **46** forming an

air inlet **45** communicating with a space formed by the back plate **11** and the plurality of blades **12**. The multi-blade air-sending device **100** can bring about effects similar to those of the aforementioned impeller **10**.

Embodiment 2

[Multi-Blade Air-Sending Device **100**B]

FIG. **18** is a partially-enlarged view of an impeller **10** of a multi-blade air-sending device **100**B according to Embodiment 2. FIG. **19** is a partially-enlarged view of the impeller **10** of the multi-blade air-sending device **100**B according to Embodiment 2. FIGS. **18** and **19** are different partially-enlarged view of the impeller **10** in a region indicated by part F of FIG. **7**. The multi-blade air-sending device **100**B according to Embodiment 2 is described with reference to FIGS. **18** and **19**. It should be noted that elements having identical configurations as those of the multi-blade air-sending device **100** or other devices of FIGS. **1** to **17** are given identical signs and a description of such elements is omitted. The impeller **10** of the multi-blade air-sending device **100**B according to Embodiment 2 is intended to further specify the configuration of the ridge **26**. Accordingly, the following description is given with reference to FIGS. **18** and **19** with a focus on the configuration of the ridge **26** of the impeller **10**.

While the ridge **26** of each of the projections **20** of the impeller **10** according to Embodiment 1 includes an inclined portion **26***a*, the ridge **26** of each of the projections **20** of the impeller **10** according to Embodiment 2 includes a horizontal portion **26***b* as shown in FIG. **18**. The horizontal portion **26***b* is a portion of the ridge **26** whose ridge line is formed parallel with a plane perpendicular to the rotation shaft RS.

Each of the plurality of projections **20** includes a horizontal portion **26***b* having a ridge line constituted by a leading end portion in a direction of projection and extending in a direction perpendicular to the axial direction of the rotation shaft RS in a side view as viewed from the direction perpendicular to the axial direction of the rotation shaft RS. The ridge **26** of each of the projections **20** of the impeller **10** according to Embodiment 2 may be constituted solely by a horizontal portion **26***b* or, as shown in FIG. **18**, may include a horizontal portion **26***b* and an inclined portion **26***a*.

The ridge **26** of each of the projections **20** of the impeller **10** according to Embodiment 1 has a ridge line constituted by a leading end portion in a direction of projection and formed in a linear fashion in a side view as viewed from the direction perpendicular to the axial direction of the rotation shaft RS. On the other hand, as shown in FIG. **19**, the ridge **26** of each of the projections **20** of the impeller **10** according to Embodiment 2 may include a wavy portion **26***c* having a ridge line constituted by a leading end portion in a direction of projection and formed in a wavelike fashion in a side view as viewed from the direction perpendicular to the axial direction of the rotation shaft RS.

As shown in FIG. **19**, each of the plurality of projections **20** includes a wavy portion **26***c*, and is formed such that the height of the projection **20** in the axial direction of the rotation shaft RS decreases from the inner circumference toward the outer circumference. The ridge **26** of the projection **20** may be constituted solely by the wavy portion **26***c* or may have the wavy portion **26***c* as part thereof in a radial direction about the rotation shaft RS. Further, each of the plurality of projections **20** is not limited to being configured to be formed such that the height of the projection **20** in the axial direction of the rotation shaft RS decreases from the inner circumference toward the outer circumference.

[Working Effects of Impeller **10** and Multi-Blade Air-Sending Device **100**B]

As mentioned above, while the impeller **10** is rotating, the projections **20** draw in a flow of gas by generating negative pressure on a surface of the impeller **10** facing in a direction opposite to the direction of rotation R of the impeller **10**, making it possible to increase the amount of air that is suctioned into the impeller **10**. By having a horizontal portion **26***b*, each of the plurality of projections **20** can adjust the area of the projection **20** in a cross-section taken along the radial direction of the impeller **10**, and can adjust the volume of air that is suctioned into the impeller **10**. This allows the impeller **10** and the multi-blade air-sending device **100**B to have improved air-sending efficiency. Further, the plurality of projections **20** include wavy portions **26***c*. The impeller **10** and the multi-blade air-sending device **100**B can attenuate vibration, as they can have their strengths increased by the wavy portions **26***c* of the projections **20**.

Further, by having a wavy portion **26***c*, each of the plurality of projections **20** can adjust an area to be formed by the projection **20** in a cross-section taken along the radial direction of the impeller **10**, and can adjust the volume of air that is suctioned into the impeller **10**. This allows the impeller **10** and the multi-blade air-sending device **100**B to have improved air-sending efficiency.

Embodiment 3

[Multi-Blade Air-Sending Device **100**C]

FIG. **20** is a plan view of an impeller **10** of a multi-blade air-sending device **100**C according to Embodiment 3. FIG. **21** is a cross-sectional view of the impeller **10** as taken along line E-E in FIG. **20**. The multi-blade air-sending device **100**C according to Embodiment 3 is described with reference to FIGS. **20** and **21**. It should be noted that elements having identical configurations as those of the multi-blade air-sending device **100** or other devices of FIGS. **1** to **19** are given identical signs and a description of such elements is omitted. The impeller **10** of the multi-blade air-sending device **100**C according to Embodiment 3 is intended to further specify the relationship between the projections **20** and the boss **11***b*. Accordingly, the following description is given with reference to FIGS. **20** and **21** with a focus on the relationship between the projections **20** and the boss **11***b*.

In the impeller **10** according to Embodiment 1, as shown in FIG. **8**, each of the plurality of projections **20** is connected to the outer circumferential wall **11***b***2** of the boss **11***b*. On the other hand, in the multi-blade air-sending device **100**C according to Embodiment 3, the impeller **10** has a space GA formed between each of the plurality of projections **20** and the outer circumferential wall **11***b***2** of the boss **11***b*. That is, the impeller **10** of the multi-blade air-sending device **100**C according to Embodiment 3 has a gap formed between the projection inner circumferential end **23** of the projection **20** and the boss **11***b*. It should be noted that the projection **20** and the boss **11***b* are connected to each other via the back plate **11**.

[Working Effects of Impeller **10** and Multi-Blade Air-Sending Device **100**C]

The back plate **11** includes a plurality of projections **20** provided at the second surface portion **11***c* and extending in the axial direction of the rotation shaft RS. By including the projections **20**, the impeller **10** and the multi-blade air-sending device **100**C make it possible to, while the impeller **10** is rotating, draw in a flow of gas by generating negative pressure on a surface of the impeller **10** facing in a direction

opposite to a direction of rotation R of the impeller **10** and increase the amount of air that is suctioned into the impeller **10**. Since the projections **20** are lower in wind speed on the inner circumference than on the outer circumference, the projections **20** less contributes to the increase in the amount of air that is suctioned into the impeller **10** than on the outer circumference. This allows the impeller **10** and the multi-blade air-sending device **100**C to reduce the number of inner circumferential walls of the projections **20**, and reducing the number of inner circumferential walls of the projections **20** makes it possible to inhibit the deformation of a shaft portion during molding. Further, by reducing the number of inner circumferential walls of the projections **20**, the impeller **10** and the multi-blade air-sending device **100**C can reduce necessary cost through material reductions or other reductions.

Embodiment 4

[Multi-Blade Air-Sending Device **100**D]

FIG. **22** is a plan view schematically showing an impeller **10** of a multi-blade air-sending device **100**D according to Embodiment 4. FIG. **23** is a schematic view showing an example of the shape of projections **20** of the impeller **10** of FIG. **22**. The multi-blade air-sending device **100**D according to Embodiment 4 is described with reference to FIGS. **22** and **23**. It should be noted that elements having identical configurations as those of the multi-blade air-sending device **100** or other devices of FIGS. **1** to **21** are given identical signs and a description of such elements is omitted. The multi-blade air-sending device **100**D according to Embodiment 4 is intended to further specify the configuration of the projections **20**. Accordingly, the following description is given with reference to FIGS. **22** and **23** with a focus on the configuration of the projections **20**.

The step **11***f* of the back plate **11** forms the outer circumferential edge **11***c***1** of the second surface portion **11***c*. As shown in FIG. **22**, a circle constituted by the outer circumferential edge **11***c***1** of the second surface portion **11***c* about the rotation shaft RS is defined as a circle CR. Moreover, as shown in FIG. **22**, an outlet angle of each of the projections **20** is defined as a projection outlet angle θ. The projection outlet angle θ is defined as an angle formed by a tangent line DL and a center line EL of the projection **20** at the projection outer circumferential end **21** at an intersection between a segment of the circle CR about the rotation shaft RS and the projection outer circumferential end **21**. Each of the plurality of projections **20** is formed such that a projection outlet angle θ at an outer circumferential end portion is an angle smaller than or equal to 90 degrees. As shown in FIG. **23**, the projection **20** extends backward in the direction of rotation R. The projection **20** is formed in an arc to curve out in the direction of rotation R in a plan view as viewed from an angle parallel with the axial direction of the rotation shaft RS.

[Working Effects of Impeller **10** and Multi-Blade Air-Sending Device **100**D]

By including the projections **20**, the impeller **10** and the multi-blade air-sending device **100**D make it possible to, while the impeller **10** is rotating, draw in a flow of gas by generating negative pressure on a surface of the impeller **10** facing in a direction opposite to a direction of rotation R of the impeller **10** and increase the amount of air that is suctioned into the impeller **10**. Further, each of the plurality of projections **20** is formed such that a projection outlet angle θ at an outer circumferential end portion is an angle smaller than or equal to 90 degrees. This allows the impeller **10** and the multi-blade air-sending device **100**D to have improved air-sending efficiency, as the load on the projections **20** during rotation is reduced.

Embodiment 5

[Multi-Blade Air-Sending Device **100**E]

FIG. **24** is a plan view of an impeller **10** of the multi-blade air-sending device **100**E according to Embodiment 5. The multi-blade air-sending device **100**E according to Embodiment 5 is described with reference to FIG. **24**. It should be noted that elements having identical configurations as those of the multi-blade air-sending device **100** or other devices of FIGS. **1** to **23** are given identical signs and a description of such elements is omitted. The multi-blade air-sending device **100**E according to Embodiment 5 includes other projecting portions other than the projections **20** at the second surface portion **11***c*. Accordingly, the following description is given with reference to FIG. **24** with a focus on a configuration of the other projecting portions formed at the second surface portion **11***c*.

As shown in FIG. **24**, the second surface portion **11***c* includes a plurality of second projections **25** projecting from the back plate **11**. Each of the second projections **25** is provided between ones of the projections **20** adjacent to each other along the circumferential direction, and is formed such that the length of the second projection **25** in a radial direction about the rotation shaft RS is shorter than the length of each of the projections **20**.

The plurality of second projections **25** are provided in a radial fashion about the rotation shaft RS, and each of the plurality of second projections **25** extends in a radial direction about the rotation shaft RS. As shown in FIG. **24**, the back plate **11** includes twenty-seven second projections **25**. However, the number of second projections **25** that are formed is not limited to 27.

The plurality of second projections **25** are arranged on circumferences with different diameters about the rotation shaft RS, and the number of the plurality of second projections **25** that are arranged on the circumferences increases from the boss **11***b* toward the plurality of blades **12**. For example, in the impeller **10** shown in FIG. **24**, nine second projections **25** are formed on a first circle EN1 located on the inner circumference, and eighteen second projections **25** are formed on a second circle EN2 located on the outer circumference of the first circle EN1.

Each of the plurality of second projections **25** is a rib formed in the shape of a plate rising from the second surface portion **11***c*. More specifically, the second projection **25** is formed in the shape of a four-cornered plate. Note, however, that the second projection **25** needs only be a structure projecting from the second surface portion **11***c* and is not limited to the four-cornered plate-like configuration.

In a case in which a height direction is a direction parallel with the axial direction of the rotation shaft RS and a direction of projection from the second surface portion **11***c*, the plurality of second projections **25** have their heights formed at the same height. Note, however, that the back plate **11** is not limited to being configured such that the plurality of second projections **25** have their heights formed at the same height. The plurality of second projections **25** may be formed at different heights, or may form a group of the same height based on certain regularity.

In a case in which the height direction is the direction parallel with the axial direction of the rotation shaft RS and the direction of projection from the second surface portion **11***c*, a second projection **25** provided at an outermost cir-

cumferential portion within the second surface portion **11***c* is formed to correspond in height to the first surface portion **11***a* at an outer circumferential end portion serving as an outermost circumferential portion. Alternatively, the second projection **25** provided at the outermost circumferential portion within the second surface portion **11***c* is formed to be lower in height than the first surface portion **11***a* at the outer circumferential end portion serving as the outermost circumferential portion. In other words, the second projection **25** provided at the outermost circumferential portion within the second surface portion **11***c* is formed such that the outer circumferential end portion of the second projection **25** does not project from the first surface portion **11***a* in the direction parallel with the axial direction of the rotation shaft RS.

The impeller **10** includes a plurality of depressions **38**. Each of the depressions **38** is formed by being surrounded by any one or more of the second surface portion **11***c*, the projections **20**, the second projections **25**, and the reinforcing portion **30**. The plurality of depressions **38** are formed along the circumferential direction about the rotation shaft RS of the back plate **11**. The number of depressions **38** that are formed along the circumferential direction increases from the boss **11***b* toward the plurality of blades **12**.

[Working Effects of Impeller **10** and Multi-Blade Air-Sending Device **100**E]

The impeller **10** and the multi-blade air-sending device **100**E include a second projection **25** provided between ones of the projections **20** adjacent to each other along the circumferential direction and formed such that the length of the second projection **25** in a radial direction about the rotation shaft RS is shorter than the length of each of the projections **20**. The second projection **25** makes it possible, while the impeller **10** is rotating, draw in a flow of gas by generating negative pressure on a surface of the impeller **10** facing in a direction opposite to a direction of rotation R of the impeller **10** and increase the amount of air that is suctioned into the impeller **10**.

Further, the number of a plurality of the second projections **25** that are arranged on the circumferences increases from the boss **11***b* toward the plurality of blades **12**. With the second surface portion **11***c* having a wide area in the radial direction, the impeller **10** increases in volume of air that is suctioned into the impeller **10**, making it easy to cause turbulence in the flow of air. Since the number of the plurality of second projections **25** that are arranged on the circumferences increases toward the outer circumference, the impeller **10** can be configured such that the second surface portion **11***c* has a narrow area in the radial direction. Moreover, with the second surface portion **11***c* having a narrow area in the radial direction, the impeller **10** makes it possible to break the force of the wind flowing in the radial direction and adjust the volume of air that is suctioned into the impeller **10**.

Further, the number of depressions **38** that are formed along the circumferential direction increases from the boss **11***b* toward the plurality of blades **12**. With the second surface portion **11***c* having a wide area in the radial direction, the impeller **10** increases in volume of air that is suctioned into the impeller **10**, making it easy to cause turbulence in the flow of air. Since the number of depressions **38** that are formed on the same circumference increases toward the outer circumference, the impeller **10** can be configured such that the second surface portion **11***c* has a narrow area in the radial direction. Moreover, with the second surface portion **11***c* having a narrow area in the radial direction, the impeller **10** makes it possible to break the force of the wind flowing in the radial direction and adjust the volume of air that is suctioned into the impeller **10**.

Embodiment 6

[Multi-Blade Air-Sending Device **100**F]

FIG. **25** is a perspective view of an impeller **10** of a multi-blade air-sending device **100**F according to Embodiment 6 as seen from one side. FIG. **26** is a perspective view of the impeller **10** of the multi-blade air-sending device **100**F according to Embodiment 6 as seen from the other side. FIG. **27** is a plan view of the impeller **10** shown in FIG. **25** as seen from one side. FIG. **28** is a plan view of the impeller **10** shown in FIG. **26** as seen from the other side. FIG. **29** is a cross-sectional view of the impeller **10** as taken along line F-F in FIG. **27**. The multi-blade air-sending device **100**F according to Embodiment 6 is described with reference to FIGS. **25** to **29**. It should be noted that elements having identical configurations as those of the multi-blade air-sending device **100** or other devices of FIGS. **1** to **24** are given identical signs and a description of such elements is omitted. The multi-blade air-sending device **100**F according to Embodiment 6 differs in configuration of the back plate **11** of the impeller **10** from that of Embodiment 1. Accordingly, the following description is given with reference to FIGS. **25** to **29** with a focus on the configuration of the back plate **11**.

The back plate **11** includes an inner circumferential portion **31** inclined with respect to the rotation shaft RS and an outer circumferential portion **32** formed in a ring shape along an outer edge of the inner circumferential portion **31**.

The inner circumferential portion **31** is formed in a conical shape. In a case in which one surface of the inner circumferential portion **31** formed in a conical shape is an inner surface and the other surface is an outer surface, the inner surface is formed in a concave shape, and the outer surface is formed in a convex shape.

The inner surface of the inner circumferential portion **31** faces the rotation shaft RS. The inner surface of the inner circumferential portion **31** is formed in such a bowl shape that the depth of the concave shape increases from the outer circumference toward the inner circumference in the radial direction about the rotation shaft RS. This inner surface of the inner circumferential portion **31** constitutes the second surface portion **11***c*. That is, one surface of the inner circumferential portion **31** in the axial direction of the rotation shaft RS constitutes the second surface portion **11***c*.

The inner surface of the inner circumferential portion **31** constitutes the second surface portion **11***c*, and at the inner surface of the inner circumferential portion **31** constituting the second surface portion **11***c*, projections **20** are formed. Further, at the inner surface of the inner circumferential portion **31** constituting the second surface portion **11***c*, a reinforcing portion **30** is formed. Furthermore, at the inner surface of the inner circumferential portion **31** constituting the second surface portion **11***c*, second projections **25** may be formed. The outer surface of the inner circumferential portion **31** is formed in a convex shape, and at the outer surface of the inner circumferential portion **31**, the second surface portion **11***c*, the projections **20**, the second projections **25**, and the reinforcing portion **30** are not formed.

In the impeller **10** according to Embodiment 1, the second surface portion **11***c* is depressed from the first surface portion **11***a* by using a difference in thickness of the back plate **11**, and in the impeller **10** according to Embodiment 6, the second surface portion **11***c* is formed by using the shape of the inner circumferential portion **31** formed in a conical shape.

The outer circumferential portion **32** is formed in a ring shape in a plan view as viewed from the direction parallel with the axial direction of the rotation shaft RS. The outer circumferential portion **32** is formed, for example, in a circular ring shape. On the inner circumference of the outer circumferential portion **32**, the inner circumferential portion **31** is formed. The outer circumferential portion **32** located on the outer circumference of the second surface portion **11***c* constitutes the first surface portion **11***a*.

[Working Effects of Impeller **10** and Multi-Blade Air-Sending Device **100**F]

The back plate **11** includes a second surface portion **11***c* depressed from the first surface portion **11***a* in an axial direction of the rotation shaft RS and a plurality of projections **20** provided at the second surface portion **11***c* and extending in the axial direction of the rotation shaft RS. While the impeller **10** is rotating, the projections **20** draw in a flow of gas by generating negative pressure on a surface of the impeller **10** facing in a direction opposite to a direction of rotation R of the impeller **10**, making it possible to increase the amount of air that is suctioned into the impeller **10**. Further, the impeller **10** includes the second surface portion **11***c* depressed from the first surface portion **11***a*, on which the plurality of blades **12** are formed, in the axial direction of the rotation shaft RS, and the projections **20** are provided at the second surface portion **11***c*. This inhibits a flow of gas produced by the projections **20** from flowing from the second surface portion **11***c* into the first surface portion **11***a*. Moreover, the flow of gas produced by the projections **20** has its centrifugally-outward force of wind broken by a step **11***f* between the first surface portion **11***a* and the second surface portion **11***c*, so that the impeller **10** does not suffer from turbulence in the flow of gas on the inner circumference of the blades **12**. This allows the impeller **10** and the multi-blade air-sending device **100**F to have higher air-sending efficiency than in a case in which the impeller **10** and the multi-blade air-sending device **100**F do not include the projections **20** or the second surface portion **11***c*.

The back plate **11** includes an inner circumferential portion **31** inclined with respect to the rotation shaft RS and an outer circumferential portion **32** formed in a ring shape along an outer edge of the inner circumferential portion **31**, and one surface of the inner circumferential portion **31** in the axial direction of the rotation shaft RS constitutes the second surface portion **11***c*. Causing the inner circumferential portion **31** to have a long inclined surface in the axial direction of the rotation shaft RS allows the impeller **10** to secure the depth of the inner circumferential portion **31** on the inner surface. Therefore, the impeller **10** and the multi-blade air-sending device **100**F make it possible to increase the heights of the projections **20**, the reinforcing portion **30**, and the second projections **25** by using the depth of the inner circumferential portion **31** on the inner surface and improve the strength of the impeller **10**. Further, the impeller **10** and the multi-blade air-sending device **100**F make it possible to increase the heights of the projections **20**, the reinforcing portion **30**, and the second projections **25** by using the depth of the inner circumferential portion **31** on the inner surface and further increase the amount of air that is suctioned into the impeller **10**.

Further, consideration is given to a case in which when a double-suction impeller **10** is incorporated into a product, an obstacle that prevents the flow of air is placed on one suction side of the impeller **10** and a suction load is unevenly put on one side of the impeller **10**. In such a case, the impeller **10** and the multi-blade air-sending device **100**F make it possible to achieve a balance of amounts of suction between the two suction sides by placing the projections **20** and the second surface portion **11***c* so that the projections **20** and the second surface portion **11***c* face the obstacle and to bring about improvement in air-sending efficiency.

Embodiment 7

[Multi-Blade Air-Sending Device **100**G]

FIG. **30** is a conceptual diagram explaining a relationship between the impeller **10** and a motor **50** in a multi-blade air-sending device **100**G according to Embodiment 7. The multi-blade air-sending device **100**G according to Embodiment 7 is described with reference to FIG. **30**. It should be noted that elements having identical configurations as those of the multi-blade air-sending device **100** or other devices of FIGS. **1** to **29** are given identical signs and a description of such elements is omitted. The multi-blade air-sending device **100**G according to Embodiment 7 is intended to further describe an example of a relationship between the impeller **10** of the multi-blade air-sending device **100**F according to Embodiment 6 and an obstacle that prevents air from flowing into the impeller **10**.

As shown in FIG. **30**, the multi-blade air-sending device **100**G may have, in addition to the impeller **10** and the scroll casing **40**, a motor **50** configured to rotate the back plate **11** of the impeller **10**. That is, the multi-blade air-sending device **100**G has an impeller **10**, a scroll casing **40** housing the impeller **10**, and a motor **50** configured to drive the impeller **10**.

The motor **50** is disposed adjacent to the side wall **44***a* of the scroll casing **40**. A motor shaft **51** serving as a rotation shaft of the motor **50** is inserted in the scroll casing **40** through a side surface of the scroll casing **40**.

The back plate **11** is disposed to be perpendicular to the rotation shaft RS along the side wall **44***a* of the scroll casing **40** facing the motor **50**. The back plate **11** has provided in a central part thereof a boss **11***b* to which the motor shaft **51** is connected, and the motor shaft **51** is fixed to the boss **11***b* of the back plate **11** while being inserted in the scroll casing **40**. The motor shaft **51** of the motor **50** is connected and fixed to the back plate **11** of the impeller **10**.

The multi-blade air-sending device **100**G is configured such that the motor **50** is disposed at and the motor shaft **51** is connected to a side of the back plate **11** at which the projections **20** and the second surface portion **11***c* are formed. Moreover, the multi-blade air-sending device **100**G is configured such that the motor **50** is not disposed at and the motor shaft **51** is not connected to a side of the back plate **11** at which the projections **20** and the second surface portion **11***c* are not formed. In other words, the projections **20** and the second surface portion **11***c* of the multi-blade air-sending device **100**G are disposed to face the motor **50**.

Let it be assumed that in the multi-blade air-sending device **100**G, the motor diameter of the motor **50** is a motor diameter MO and the inside diameter of the bellmouth **46** is an inside diameter BI. The motor diameter MO of the motor **50** is larger than the inside diameter BI of the bellmouth **46**. The multi-blade air-sending device **100**G is configured to satisfy the relationship "Motor Diameter MO>Inside Diameter BI".

The impeller **10** of the multi-blade air-sending device **100**G may be the impeller **10** of the multi-blade air-sending device **100** or other devices according to Embodiments 1 to 5, or may be the impeller **10** of the multi-blade air-sending device **100**F according to Embodiment 6. In a case in which the impeller **10** of the multi-blade air-sending device **100**G

is the impeller **10** of the multi-blade air-sending device **100**F according to Embodiment 6, the back plate **11** of the impeller **10** includes an inner circumferential portion **31** and an outer circumferential portion **32** as shown in FIG. **30**.

Once the motor **50** is brought into operation, the plurality of blades **12** rotate about the rotation shaft RS via the motor shaft **51** and the back plate **11**. This causes outside air to be suctioned into the impeller **10** through the air inlet **45** and blown out into the scroll casing **40** by a booster action of the impeller **10**. The air blown out into the scroll casing **40** recovers its static pressure by having its speed reduced in an expanded air trunk formed by the peripheral wall **44***c* of the scroll casing **40**, and is blown out to the outside through the discharge port **42***a* shown in FIG. **1**.

[Working Effects of Impeller **10** and Multi-Blade Air-Sending Device **100**G]

At a side of the scroll casing **40** at which the motor **50** is disposed, the motor **50** becomes an obstacle to the flow of gas to narrow the air inlet **45** of the scroll casing **40** and the air inlet **10***e* of the impeller **10**, with the result that the amount of a flow of gas that is suctioned decreases in general.

On the other hand, the multi-blade air-sending device **100**G is configured such that the projections **20** and the second surface portion **11***c* are disposed to face the motor **50**. As mentioned above, the projections **20** and the second surface portion **11***c* increase the amount of a flow of gas that is suctioned and reduce turbulence in the flow of gas, thereby making it possible to achieve higher air-sending efficiency than in a case in which the multi-blade air-sending device **100**G do not include the projections **20** or the second surface portion **11***c*. Therefore, even at the side of the scroll casing **40** at which the motor **50** is disposed, where the amount of a flow of gas that is suctioned decreases in general, the multi-blade air-sending device **100**G can have improved air-sending efficiency by increasing the amount of a flow of gas that is suctioned and reducing turbulence in the flow of gas.

In a case in which the multi-blade air-sending device **100**G includes an inner circumferential portion **31** and an outer circumferential portion **32**, the inner surface of the inner circumferential portion **31** makes it possible by having including the projections **20** and the second surface portion **11***c* to improve air-sending efficiency by increasing the amount of a flow of gas that is suctioned and reducing turbulence in the flow of gas. Moreover, the multi-blade air-sending device **100**G is configured such that the projections **20** and the second surface portion **11***c* are disposed to face the motor **50**. Therefore, even at the side of the scroll casing **40** at which the motor **50** is disposed, where the amount of a flow of gas that is suctioned decreases in general, the multi-blade air-sending device **100**G can have improved air-sending efficiency by increasing the amount of a flow of gas that is suctioned and reducing turbulence in the flow of gas. On the other hand, the outer surface of the inner circumferential portion **31** does not include the projections **20** or the second surface portion **11***c*. Therefore, the multi-blade air-sending device **100**G makes it possible to achieve a balance between the amounts of air that are suctioned through both sides of a double-suction impeller **10** and to bring about improvement in air-sending efficiency.

Further, the motor diameter MO of the motor **50** is larger than the inside diameter BI of the bellmouth **46**. As mentioned above, the multi-blade air-sending device **100**G is configured such that the projections **20** and the second surface portion **11***c* are disposed to face the motor **50**. Therefore, even in a case in which the presence of the motor **50**, which becomes an obstacle to the flow of gas, causes a decrease in the amount of a flow of gas that is suctioned and a great loss in suction of the impeller **10**, the multi-blade air-sending device **100**G can have improved air-sending efficiency by increasing the amount of a flow of gas that is suctioned and reducing turbulence in the flow of gas.

Embodiments 1 to 7 have been described by taking as an example a multi-blade air-sending device **100** including a double-suction impeller **10** having a plurality of blades **12** formed on both sides of a back plate **11**. However, the present disclosure is also applicable to a multi-blade air-sending device **100** including a single-suction impeller **10** having a plurality of blades **12** formed only on one side of a back plate **11**.

Embodiment 8

[Air-Conditioning Apparatus **140**]

FIG. **31** is a perspective view of an air-conditioning apparatus **140** according to Embodiment 8. FIG. **32** is a diagram showing an internal configuration of the air-conditioning apparatus **140** according to Embodiment 8. As for a multi-blade air-sending device **100** used in the air-conditioning apparatus **140** according to Embodiment 8, elements having identical configurations as those of the multi-blade air-sending device **100** or other devices of FIGS. **1** to **30** are given identical signs, and a description of such elements is omitted. To show the internal configuration of the air-conditioning apparatus **140**, FIG. **32** omits to illustrate an upper surface portion **16***a*.

The air-conditioning apparatus **140** according to Embodiment 8 includes any one or more of the multi-blade air-sending devices **100** to **100**G according to Embodiments 1 to 7 and a heat exchanger **15** disposed in such a location as to face a discharge port **42***a* of the multi-blade air-sending device **100**. Further, the air-conditioning apparatus **140** according to Embodiment 8 includes a case **16** installed above a ceiling of a room to be air-conditioned. In the following description, the term "multi-blade air-sending device **100**" indicates the use of any one of the multi-blade air-sending devices **100** to **100**G according to Embodiments 1 to 7. Further, although, in FIGS. **31** and **32**, a multi-blade air-sending device **100** having a scroll casing **40** in the case **16** is shown, an impeller **10** having no scroll casing **40** may be installed in the case **16**.

(Case **16**)

As shown in FIG. **31**, the case **16** is formed in a cuboidal shape including an upper surface portion **16***a*, a lower surface portion **16***b*, and side surface portions **16***c*. The shape of the case **16** is not limited to the cuboidal shape but may for example be another shape such as a circular columnar shape, a prismatic shape, a conical shape, a shape having a plurality of corner portions, or a shape having a plurality of curved surface portions.

One of the side surface portions **16***c* of the case **16** is a side surface portion **16***c* having a case discharge port **17** formed therein. The case discharge port **17** is formed in a rectangular shape as shown in FIG. **31**. The shape of the case discharge port **17** is not limited to the rectangular shape but may for example be another shape such as a circular shape or an oval shape.

Another one of the side surface portions **16***c* of the case **16** is a side surface portion **16***c* having a case air inlet **18** formed therein and being opposite the side surface portion **16***c* having the case discharge port **17** formed therein. The case air inlet **18** is formed in a rectangular shape as shown in FIG. **32**. The shape of the case air inlet **18** is not limited

to the rectangular shape but may for example be another shape such as a circular shape or an oval shape. A filter configured to remove dust in the air may be disposed at the case air inlet **18**.

Inside the case **16**, the multi-blade air-sending device **100** and the heat exchanger **15** are housed. The multi-blade air-sending device **100** includes an impeller **10**, a scroll casing **40** having a bellmouth **46** formed therein, and a motor **50**.

The motor **50** is supported by a motor support **9***a* fixed to the upper surface portion **16***a* of the case **16**. The motor **50** has a motor shaft **51**. The motor shaft **51** is disposed to extend parallel to the side surface portion **16***c* having the case air inlet **18** formed therein and the side surface portion **16***c* having the case discharge port **17** formed therein. As shown in FIG. **32**, the air-conditioning apparatus **140** has two impellers **10** attached to the motor shaft **51**.

The impellers **10** of the multi-blade air-sending device **100** forms a flow of air that is suctioned into the case **16** through the case air inlet **18** and blown out into an air-conditioned space through the case discharge port **17**. The number of impellers **10** that are disposed in the case **16** is not limited to 2 but may be 1 or larger than or equal to 3.

As shown in FIG. **32**, the multi-blade air-sending device **100** is attached to a divider **19** configured to divide an internal space of the case **16** into a space S**11** facing a suction side of the scroll casing **40** and a space S**12** facing a blowout side of the scroll casing **40**.

The heat exchanger **15** is disposed in such a location as to face the discharge port **42***a* of the multi-blade air-sending device **100**, and is disposed in the case **16** to be on an air trunk of air to be discharged by the multi-blade air-sending device **100**. The heat exchanger **15** adjusts the temperature of air that is suctioned into the case **16** through the case air inlet **18** and blown out into the air-conditioned space through the case discharge port **17**. As the heat exchanger **15**, a heat exchanger of a publicly-known structure can be applied. The case air inlet **18** needs only be formed in a location perpendicular to the axial direction of the rotation shaft RS of the multi-blade air-sending device **100**. For example, the case air inlet **18** may be formed in the lower surface portion **16***b*.

Rotation of the impeller **10** of the multi-blade air-sending device **100** causes the air in the air-conditioned space to be suctioned into the case **16** through the case air inlet **18**. The air suctioned into the case **16** is guided toward the bellmouth **46** and suctioned into the impeller **10**. The air suctioned into the impeller **10** is blown out outward in the radial direction of the impeller **10**.

The air blown out from the impeller **10** passes through the inside of the scroll casing **40**, blown out of the scroll casing **40** through the discharge port **42***a*, and then supplied to the heat exchanger **15**. The air supplied to the heat exchanger **15** is subjected to temperature and humidity control by, during passage through the heat exchanger **15**, exchanging heat with refrigerant flowing through the inside of the heat exchanger **15**. The air having passed through the heat exchanger **15** is blown out to the air-conditioned space through the case discharge port **17**.

The air-conditioning apparatus **140** according to Embodiment 8 includes any one of the multi-blade air-sending devices **100** to **100**G according to Embodiments 1 to 7. Therefore, the air-conditioning apparatus **140** can bring about effects similar to those of any of Embodiments 1 to 7.

Each of Embodiment 1 to 8 may be implemented in combination with the other. Further, the configurations shown in the foregoing embodiments show examples and may be combined with another publicly-known technology, and parts of the configurations may be omitted or changed, provided such omissions and changes do not depart from the scope. For example, an embodiment describes an impeller **10** or other devices constituted by the back-plate-side blade region **122***a* serving as the first region and the rim-side blade region **122***b* serving as the second region. The impeller **10** is not limited to an impeller constituted solely by the first region and the second region. The impeller **10** may further have another region as well as the first region and the second region.

The invention claimed is:

1. An impeller connected to a motor having a drive shaft, the impeller comprising:

a back plate having a boss having a shaft hole through which the drive shaft is inserted;

a ring-shaped rim provided to face the back plate; and

a plurality of blades connected to the back plate and the rim, and arranged along a circumferential direction of the back plate about the rotation shaft,

the back plate including

a first surface portion on which the plurality of blades are formed,

a second surface portion provided at a region between the boss and the first surface portion, and depressed from the first surface portion in an axial direction of the rotation shaft,

a plurality of projections projecting from the second surface portion and having a plate shape to extend in the axial direction, and

wherein the second surface portion is constituted by a back plate body whose thickness is thinner than a thickness of a back plate body constituting the first surface portion.

2. The impeller of claim **1**, wherein the second surface portion is formed in a circular ring shape about the boss.

3. The impeller of claim **1**, wherein a length of a depression outside diameter constituted by an outer circumferential edge of the second surface portion is greater than a magnitude of a difference between a blade inside diameter constituted by an inner circumferential end of each of the plurality of blades and the depression outside diameter.

4. The impeller of claim **1**, wherein each of the plurality of projections extends in a radial direction about the rotation shaft.

5. The impeller of claim **1** wherein each of the plurality of projections is connected to an outer circumferential wall of the boss.

6. The impeller of claim **1**, wherein a space is formed between each of the plurality of projections and an outer circumferential wall of the boss.

7. The impeller of claim **1**, wherein

each of the plurality of projections includes

a projection inner circumferential end portion serving as an inner circumferential end portion in a radial direction about the rotation shaft, and

a projection outer circumferential end serving as an outer circumferential end portion in the radial direction, and

the projection outer circumferential end does not project from the first surface portion in the axial direction.

8. The impeller of claim **7**, wherein a length of a projection outside diameter constituted by the projection outer circumferential end of each of the plurality of projections is greater than a magnitude of a difference between a blade inside diameter constituted by the inner circumferential end of each of the plurality of blades and the projection outside diameter.

9. The impeller of claim 1, wherein each of the projections includes an inclined portion inclined such that a height of the inclined portion in the axial direction decreases from an inner circumference toward an outer circumference.

10. The impeller of claim 1, wherein each of the plurality of projections includes a horizontal portion having a ridge line constituted by a leading end portion in a direction of projection and extending in a direction perpendicular to the axial direction in a side view as viewed from the direction perpendicular to the axial direction.

11. The impeller of claim 1, wherein each of the plurality of projections is formed such that a height of the projection in the axial direction decreases from an inner circumference toward an outer circumference, and includes a wavy portion having a ridge line constituted by a leading end portion in a direction of projection and formed in a wavelike fashion in a side view as viewed from a direction perpendicular to the axial direction.

12. The impeller of claim 1, wherein each of the plurality of projections is formed such that a projection outlet angle at an outer circumferential end portion is an angle smaller than or equal to 90 degrees.

13. The impeller of claim 1, wherein

the back plate includes a reinforcing portion provided at the second surface portion and extending in the axial direction, and

the reinforcing portion connects the plurality of projections to each other along the circumferential direction.

14. The impeller of claim 13, wherein a plurality of the reinforcing portions are provided in a radial direction about the rotation shaft.

15. The impeller of claim 1,

the second surface portion includes a plurality of second projections projecting from the back plate, and

each of the second projections is provided between ones of the projections adjacent to each other along the circumferential direction, and is formed such that a length of the second projection in a radial direction about the rotation shaft is shorter than a length of each of the projections.

16. The impeller of claim 15, wherein

the plurality of second projections are arranged on circumferences with different diameters about the rotation shaft, and

a number of the plurality of second projections that are arranged on the circumferences increases from the boss toward the plurality of blades.

17. The impeller of claim 13, wherein

the second surface portion includes a plurality of second projections projecting from the back plate,

each of the second projections is provided between adjacent ones of the projections and formed such that a length of the second projection in a radial direction about the rotation shaft is shorter than a length of each of the projections, and

a number of depressions that are formed by being surrounded by the second surface portion, the projections, the second projections, and the reinforcing portion increases from the boss toward the plurality of blades.

18. The impeller of claim 1, wherein

the back plate has its first and second surface portions on both plate sides of the back plate, and

each of the second surface portions formed on both plate sides of the back plate includes the plurality of projections.

19. The impeller of claim 1, wherein

the back plate includes

an inner circumferential portion inclined with respect to the rotation shaft, and

an outer circumferential portion formed in a ring shape along an outer edge of the inner circumferential portion,

one surface of the inner circumferential portion in the axial direction constitutes the second surface portion, and

the outer circumferential portion located on an outer circumference of the second surface portion constitutes the first surface portion.

20. The impeller of claim 1, wherein

each of the plurality of blades includes

an inner circumferential end located close to the rotation shaft in a radial direction about the rotation shaft,

an outer circumferential end located closer to an outer circumference than the inner circumferential end in the radial direction about the rotation shaft,

a sirocco blade portion being forward-swept and including the outer circumferential end and having a blade outlet angle of larger than 90 degrees, and

a turbo blade portion being swept-back and including the inner circumferential end.

21. A multi-blade air-sending device comprising:

the impeller of claim 1, and

a scroll casing housing the impeller and having a peripheral wall formed into a volute shape and a side wall having a bellmouth forming an air inlet communicating with a space formed by the back plate and the plurality of blades.

22. The multi-blade air-sending device of claim 21, further comprising a motor having a motor shaft connected to the back plate and being disposed outside the scroll casing,

the second surface portion and the plurality of projections being disposed to face the motor.

23. The multi-blade air-sending device of claim 22, wherein a motor diameter of the motor is larger than an inside diameter of the bellmouth.

24. An air-conditioning apparatus comprising the multi-blade air-sending device of claim 21.

25. The impeller of claim 20, wherein

a first region located closer to the back plate than a middle point in the axial direction, and

a second region located closer to the rim than the first region,

are defined, and

in a case in which the plurality of blades are constituted by blades having blade lengths being lengths of the blades in the radial direction about the rotation shaft, a blade length in the first region is longer than a blade length in the second region, and in the first region and the second region, a ratio of the turbo blade portion in the radial direction about the rotation shaft is larger than a ratio of the sirocco blade portion in the radial direction about the rotation shaft.

* * * * *