US011807552B2

(12) **United States Patent**
Petrisca

(10) **Patent No.: US 11,807,552 B2**
(45) **Date of Patent: Nov. 7, 2023**

(54) **SOLAR POWERED WATER DESALINATOR AND METHOD**

(71) Applicant: **Darian Petrisca**, Oakville (CA)

(72) Inventor: **Darian Petrisca**, Oakville (CA)

(*) Notice: Subject to any disclaimer, the term of this patent is extended or adjusted under 35 U.S.C. 154(b) by 0 days.

(21) Appl. No.: **17/741,186**

(22) Filed: **May 10, 2022**

(65) **Prior Publication Data**

US 2022/0267172 A1 Aug. 25, 2022

Related U.S. Application Data

(62) Division of application No. 16/926,019, filed on Jul. 10, 2020, now Pat. No. 11,345,612.

(51) **Int. Cl.**
C02F 1/14 (2023.01)
C02F 1/04 (2023.01)
(Continued)

(52) **U.S. Cl.**
CPC ***C02F 1/14*** (2013.01); ***C02F 1/042*** (2013.01); ***C02F 1/043*** (2013.01); ***F24S 50/20*** (2018.05); *C02F 2103/08* (2013.01); *G02B 3/08* (2013.01)

(58) **Field of Classification Search**
CPC C02F 1/042; C02F 1/12; C02F 1/14; C02F 1/04–18; F24S 50/20; F24S 23/30;
(Continued)

(56) **References Cited**

U.S. PATENT DOCUMENTS

687,262 A 11/1901 Powers
3,300,393 A 1/1967 Fisher
(Continued)

FOREIGN PATENT DOCUMENTS

CN 105347412 A 2/2016
EP 0099320 A2 * 1/1984 ..... C02F 1/10
KR 10-1848683 4/2018

OTHER PUBLICATIONS

Espacenet English Translation of EP 0099320.*
(Continued)

Primary Examiner — Jonathan Luke Pilcher

(57) **ABSTRACT**

A water desalinator that employs the use of solar concentration, evaporation and humidification, mimicking the natural hydrological cycle in a closed, modular vessel to produce freshwater from salt, brackish, brines and seawater, and a concentrate stream for further processing. Feed water is received and stored in a basin. Surface humidity is generated by the evaporation of basin water. A lens is used to focus sunlight, tracked the suns path based on biomimicry of a sunflower, on a thermal conductor. The thermal conductor has a rounded side-profile and generates a variable temperature across its radius. Water is pumped from the basin to a sprinkler head to be dripped or sprayed on the thermal conductor to generate water vapour. This water vapour consequently mixes with the air in the reaction vessel to increase system humidity. Humid air is removed from the reaction vessel and condensed in a condenser. Accordingly, the salinity concentration of input water is reduced from the output of the reaction vessel. Multiple reaction vessels or concentrators may be used in tandem to achieve improved performance.

11 Claims, 7 Drawing Sheets

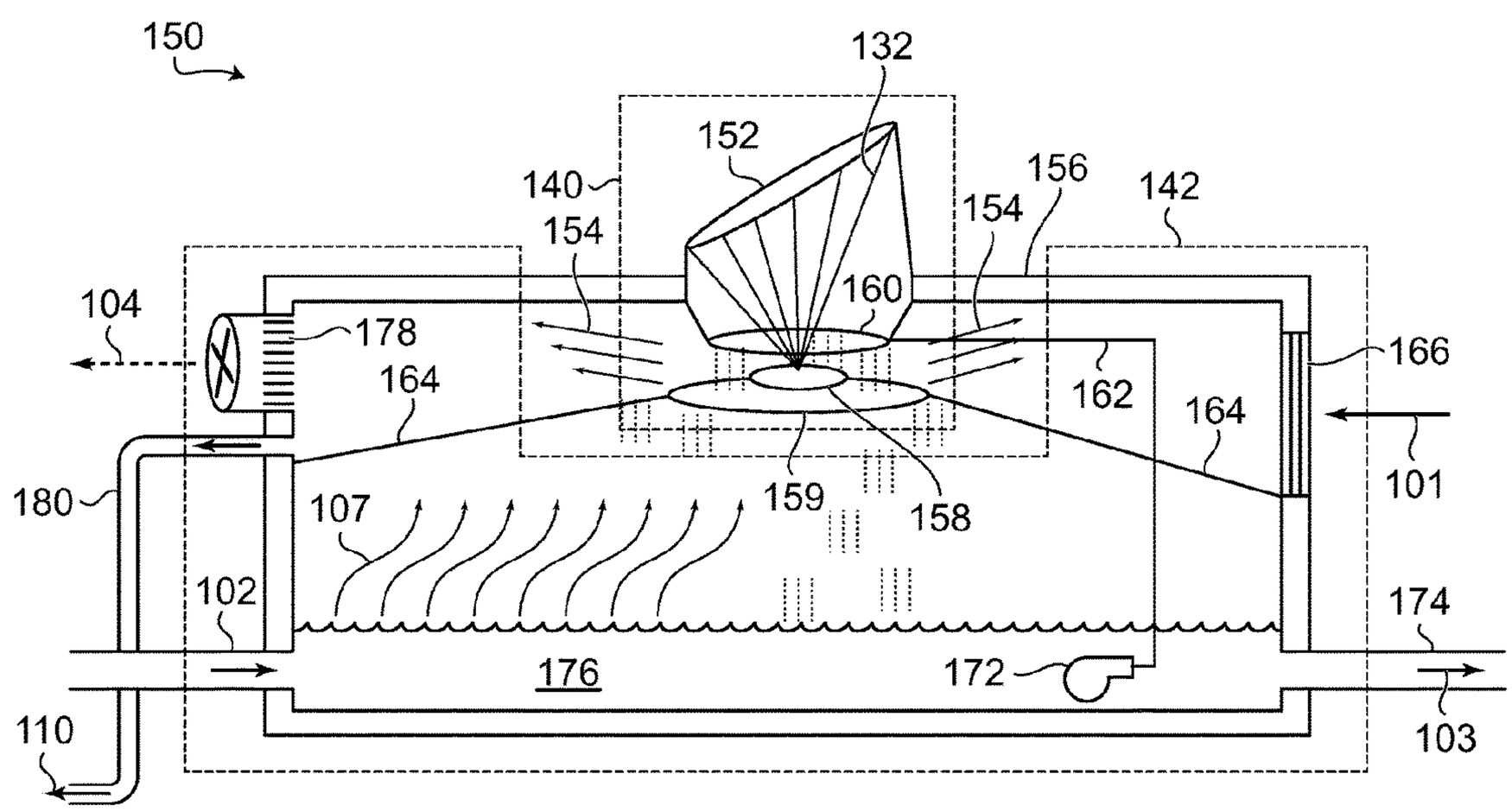

(51) **Int. Cl.**

F24S 50/20	(2018.01)
G02B 3/08	(2006.01)
C02F 103/08	(2006.01)

(58) **Field of Classification Search**
CPC F24S 23/31; B01D 1/0029; B01D 1/0035; B01D 1/16; B01D 5/006; B01D 5/0066
See application file for complete search history.

(56) **References Cited**

U.S. PATENT DOCUMENTS

3,357,897	A *	12/1967	Salzer	C02F 1/14 202/83
4,077,849	A	3/1978	Ziehm	
4,194,949	A *	3/1980	Stark	F24S 23/30 202/180
4,253,307	A *	3/1981	Smith	F03G 6/065 60/641.15
4,270,981	A *	6/1981	Stark	C02F 1/14 202/180
4,312,709	A *	1/1982	Stark	F24S 30/425 202/202
4,323,052	A	4/1982	Stark	
4,660,544	A *	4/1987	Husson, Jr.	C02F 1/14 203/DIG. 1
4,850,338	A *	7/1989	Husson, Jr.	F24S 25/67 126/648
4,966,655	A	10/1990	Wilkerson, Jr.	
5,348,622	A *	9/1994	Deutsch	C02F 1/14 203/1
5,650,050	A	7/1997	Kaufmann	
6,500,216	B1	12/2002	Takayasu	
6,656,326	B2 *	12/2003	Nagler	B01D 1/28 202/241
8,882,968	B1	11/2014	Griggs	
2009/0020406	A1	1/2009	Nirmalakhandan et al.	
2009/0152183	A1	6/2009	Stewart et al.	
2014/0231327	A1	8/2014	D'Alba et al.	
2015/0298991	A1	10/2015	Salama	
2015/0353379	A1	12/2015	Lee	

OTHER PUBLICATIONS

Wu et al., "Experimental investigation of a multi-stage humidification-dehumidification desalination system heated directly by a cylindrical Fresnel lens solar concentrator", Energy Conversion and Management 143 (2017), pp. 241-251.

Mahmoud et al., "Utilization of Fresnel Lens Solar Collector in Water Heating for Desalination By Humidification-Dehumidification Process", Fifteenth International Water Technology Conference, IWTC-15 2011, Alexandria, Egypt.

Sarah Wray, "Saudi Neom megacity plans world-first 'solar dome' desalination plant" URL: https://www.smartcitiesworld.net/news/news/saudi-neom-megacity-plans-world-first-solar-dome-desalination-plant-4992, Jan. 31, 2020.

"Solar still smashes desalination record" URL:https://www.theengineer.co.uk/solar-still-smashes-desalination-record/, Feb. 10, 2020.

International Search Report and Written Opinion dated Oct. 5, 2021, issued in international patent application No. PCT/CA2021/050948 (13 pages).

"Scale", Feb. 9, 2016 (date obtained by wayback machine), hydroflow-usa.com, URL: https://www.hydroflow-usa.com/Scale (Year: 2016).

"12 Creative Ways to Reuse Shipping Containers", GlobalTraz.com, May 25, 2016, https://www.globaltranz.com/shipping-container/ (Year: 2016).

* cited by examiner

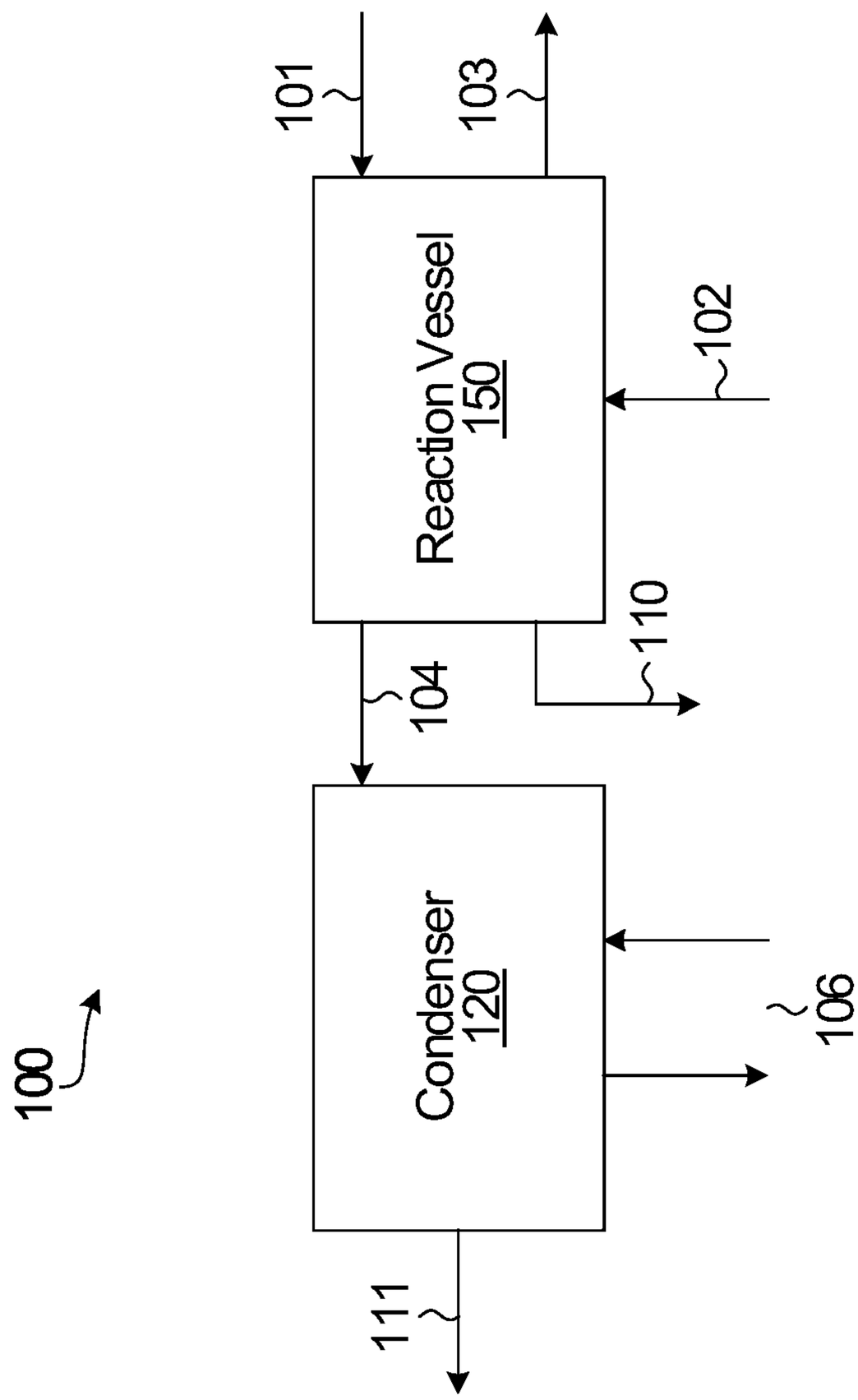
100
101
103
Reaction Vessel
150
102
110
104
Condenser
120
106
111

FIG. 1

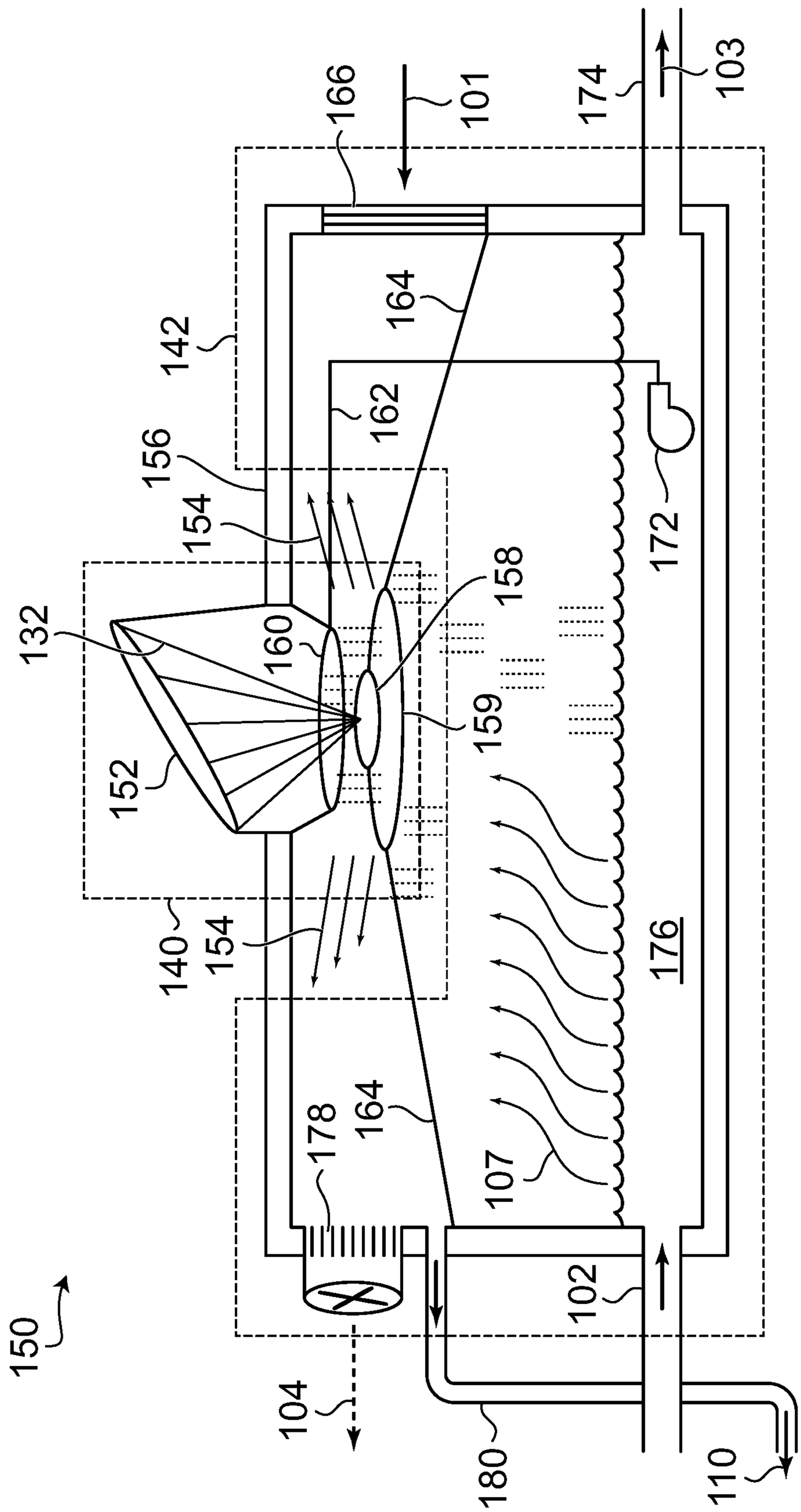
166
101
174
103
164
142
162
156
154
172
158
132
160
159
152
154
140
176
178
164
107
102
150
104
180
110

FIG. 2

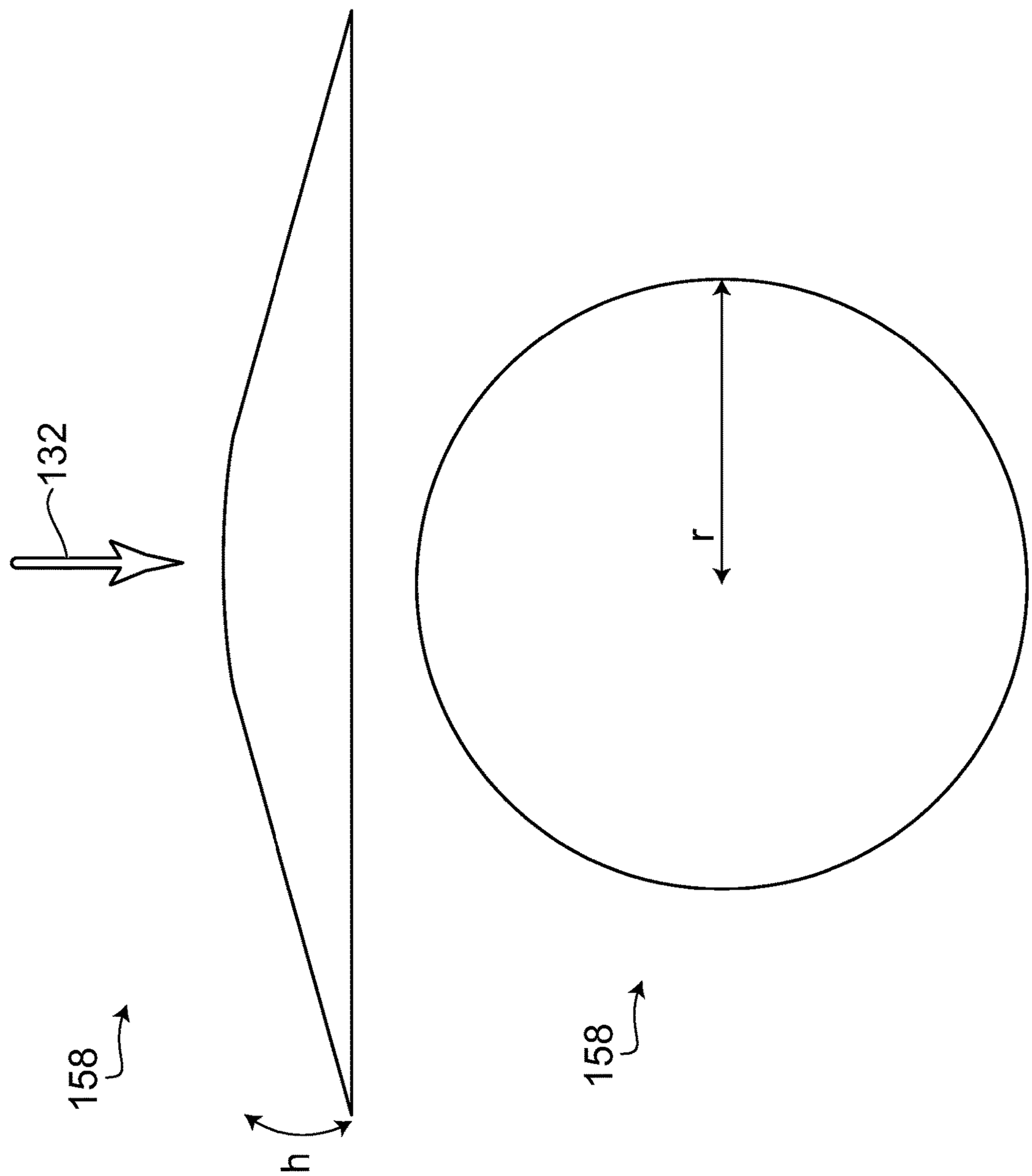

FIG. 3

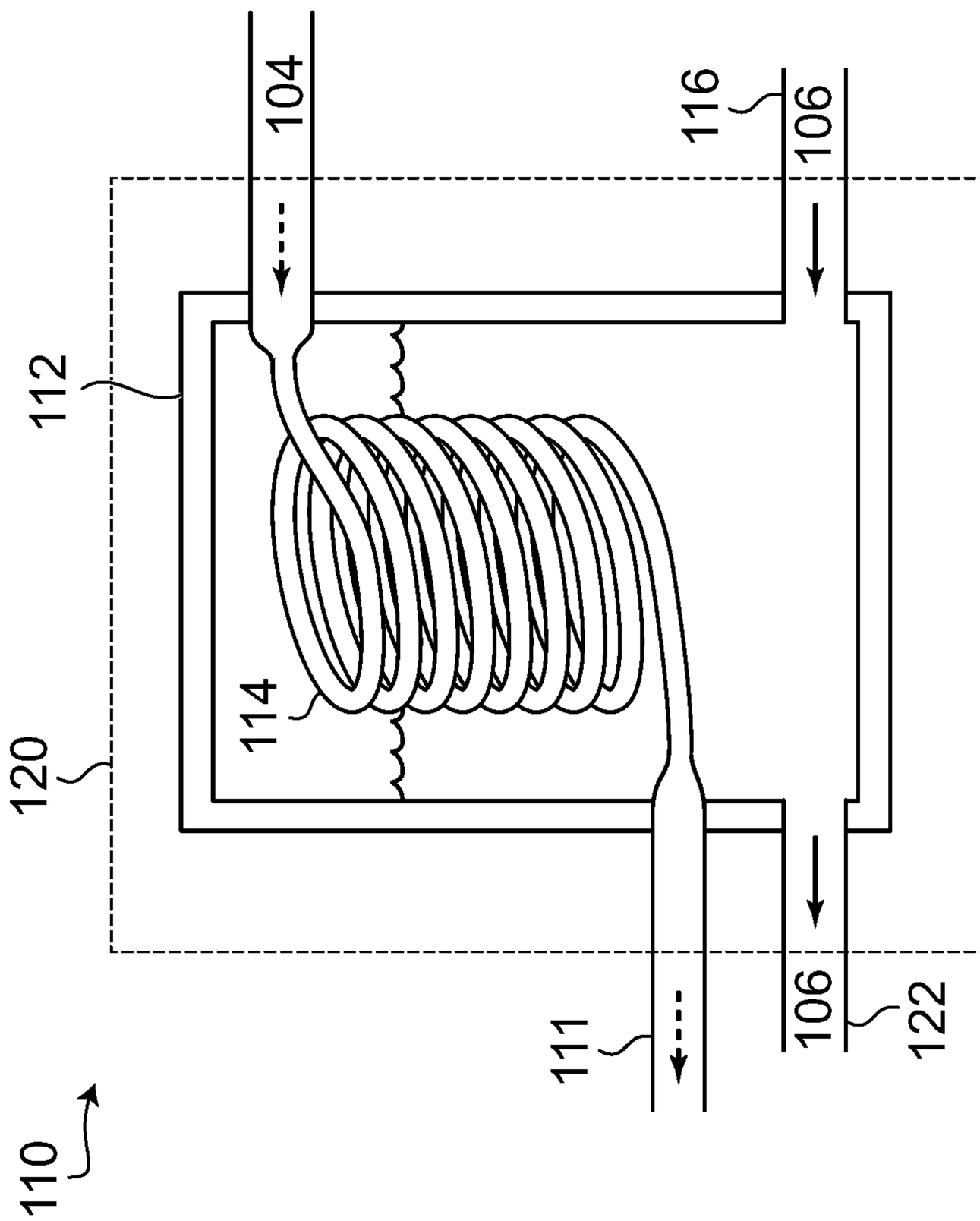

FIG. 4

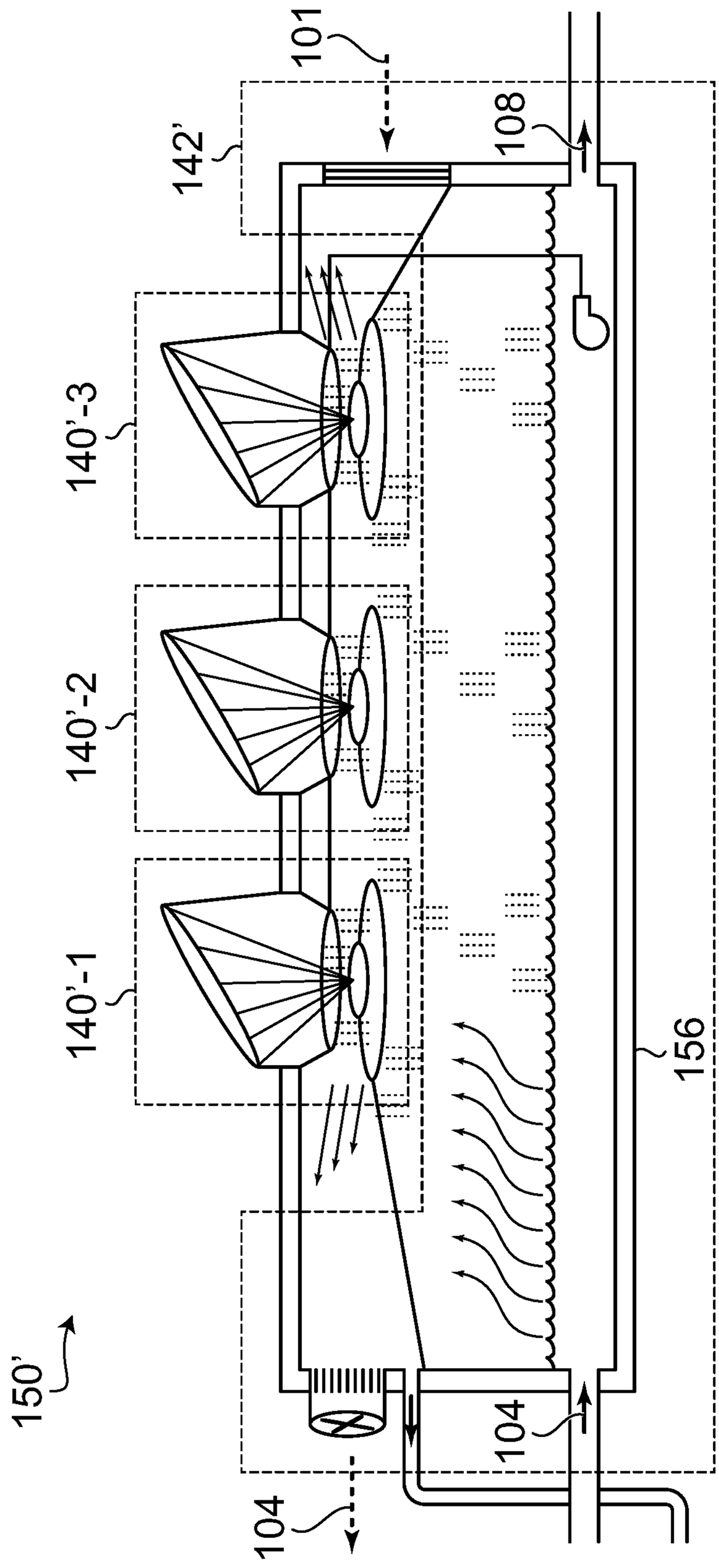

FIG. 5

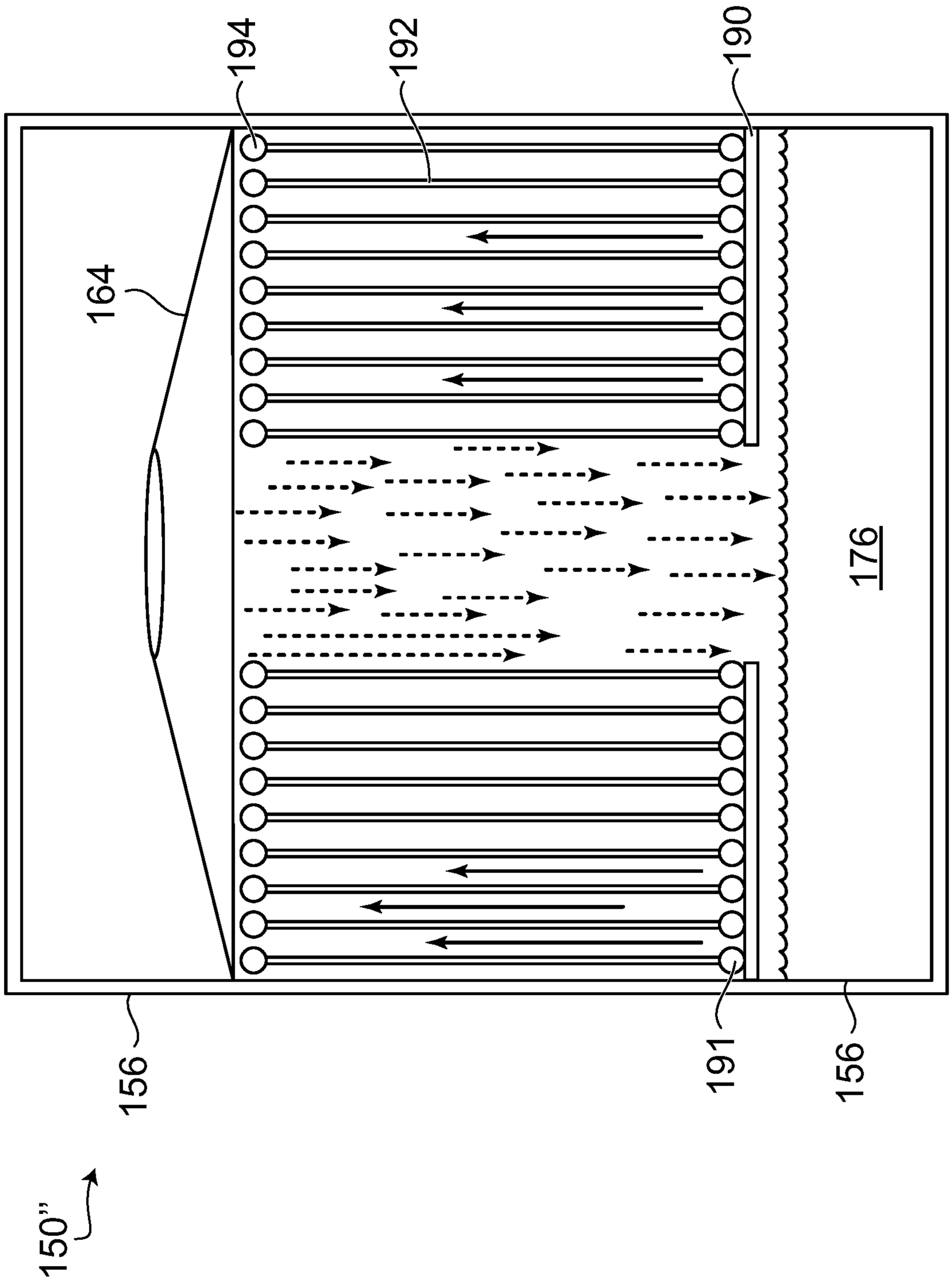

FIG. 6

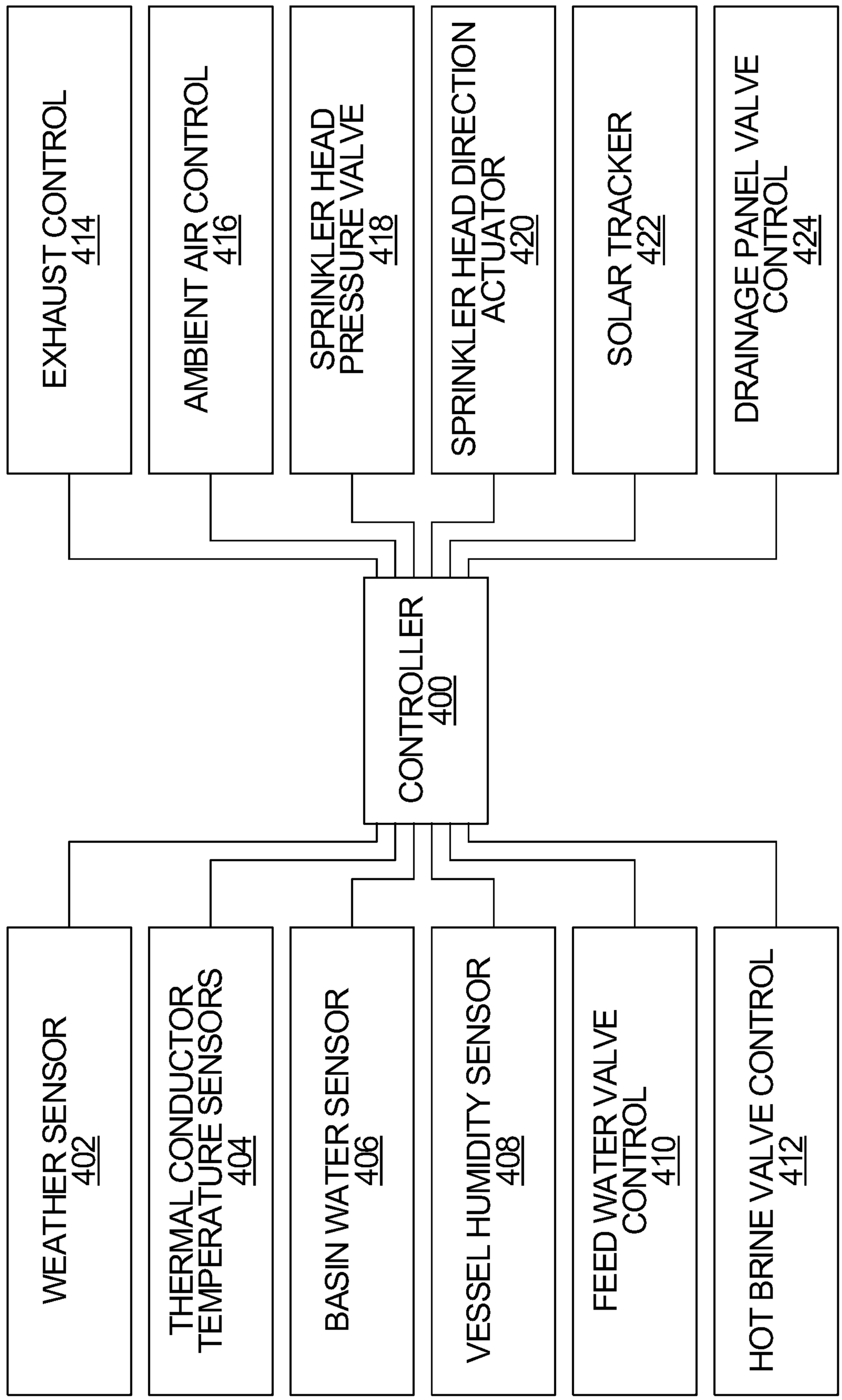
EXHAUST CONTROL 414
AMBIENT AIR CONTROL 416
SPRINKLER HEAD PRESSURE VALVE 418
SPRINKLER HEAD DIRECTION ACTUATOR 420
SOLAR TRACKER 422
DRAINAGE PANEL VALVE CONTROL 424
CONTROLLER 400
WEATHER SENSOR 402
THERMAL CONDUCTOR TEMPERATURE SENSORS 404
BASIN WATER SENSOR 406
VESSEL HUMIDITY SENSOR 408
FEED WATER VALVE CONTROL 410
HOT BRINE VALVE CONTROL 412

FIG. 7

SOLAR POWERED WATER DESALINATOR AND METHOD

CROSS REFERENCE TO RELATED APPLICATIONS

This application is a divisional of U.S. patent application Ser. No. 16/926,019 filed Jul. 10, 2020, the entire contents of the prior application are hereby incorporated by reference."

FIELD

This disclosure relates to desalination using solar concentration, evaporation and humidification.

BACKGROUND

The vast majority of water on earth is salt water. As access to fresh water supplies (for drinking, irrigation & industrial purposes) continues to be a global concern, the ability to generate potable water from previously untapped or under-tapped sources will be a key factor in ensuring the habitability of any given location. Accordingly, there exists a desire to remove salt and minerals from brackish water or seawater to be used for human consumption, agriculture or alternative industrial uses. Water related issues are only intensified in areas of increased water scarcity, electricity availability and the impeding effects of climate change.

Water vapour (found in mist, fog, clouds, etc) is the gaseous state of water. While the air we breathe is largely nitrogen and oxygen, air also includes water vapour. Humidity is the measure of the amount of water vapor in a body of air. Both temperature and pressure play a role in the amount of water vapour a body of air may hold. With constant pressure, the greater the temperature, the greater amount of water vapour a body of air can hold. Saturation refers to the maximum amount of water vapor an air mixture can contain at a given temperature. Steam is the term used to refer to pure water vapour, i.e. what is generated by bringing a body of water to 100° C. When a volume of air at a given temperature holds the maximum amount of water vapour, the air is said to be saturated. Relative humidity is the water-vapour content of the air relative to its content at saturation. If a body of air is saturated at a high temperature, a reduction of temperature will lower the amount of water vapour the body of air is able to hold. The excess water vapour will form a condensate (i.e. return to liquid form), free of dissolved salts and minerals.

Solar evaporation and concentration refers to the process of using solar energy from the sun to remove salt & mineral content from salty brines, brackish water or seawater. Through this process, an output water is generated having a lower saline concentration than an input water. Utilization of solar power to drive an evaporation process produces two streams: an evaporate and a concentrated, brine solution. This process occurs naturally through the water cycle: surface seawater is evaporated from heat generated by sunlight, humid air (i.e. air mixed with water vapour) then rises and turns into clouds, and the clouds condense and eventually turn into rainfall.

Known methods of desalination may use chemical, electrical or physical processes to treat input water. However, these methods can require a great deal of input energy or upfront costs to generate outputs of desalinated water. Further, the apparatuses themselves may occupy a great deal of physical space to fit the necessary complex, expendable

apparatus and components. These systems also require a significant amount of process chemicals and energy for operation, and may create toxic by-products. These systems may also only function properly in specific locations.

Accordingly, there exists a need for a novel system, which is modular and can be deployed anywhere (in land, on floating platforms in seas and oceans), with minimal infrastructure/installation, labour with an extended lifecycle.

SUMMARY

An example water desalinator is divided into two modular components: a reaction vessel and a condenser. The reaction vessel receives a salt water input from an input source, and direct sunlight from a light source (such as the sun). The input water is stored in a basin. Solar rays are focused by a lens on a thermal conductor. Surface humidity is generated from the evaporation of basin water. In addition, water is pumped from the basin to the thermal conductor, wherein the water is instantly evaporated into water vapour, while water that isn't evaporated on the surface of the conductor is allowed to fall back to the basin. This water vapour mixes with the air in the reaction vessel to ensure maximum relative humidity. Any condensation that is formed within the reaction vessel will be removed through multiple drainage ports. The humid air is outputted/extracted from the reaction vessel to the condenser.

The condenser receives the humid air from the reaction vessel. Through a heat exchanger, the humid air is condensed to generate output water having a lower salinity than the input water. The heat exchanger employs a coolant (or cooler feedwater) to remove heat from the humid air, thereby lowering the saturation point, and generating condensate.

Aspects of the present disclosure relate to a water desalinator comprising: a reaction vessel, the reaction vessel comprising: a basin, configured to receive salty water, the basin having an open surface to allow water to evaporate from the basin and rise to the top of the reaction vessel; a pump configured to provide the salty water to a thermal conductor, wherein the thermal conductor is positioned at a height above the basin and heated using a lens to generate water vapor from the salty water provided to the thermal conductor; drainage panels extending from at least one wall of the reaction vessel to an opening, wherein the drainage panels are configured to allow evaporated water from the basin to pass and drain any condensation formed above the drainage panels; and an output vent configured to remove humid air from the reaction vessel; a condenser, the condenser comprising: a heat exchanger configured to receive humid air from the output vent, wherein the heat exchanger is cooled with a coolant to condense water vapour in the air to generate water having a lower salinity and mineral content.

Other aspects relate to a method of solar concentration, evaporation and humidification, the method comprising: receiving salty water from an input source; storing the salty water in a reaction vessel having a basin; evaporating at least a portion of the salty water from the surface of the basin to rise to the top of the reaction vessel; pumping the salty water from the basin to a thermal conductor to be vapourized, wherein said thermal conductor is: heated using a lens, and said thermal conductor has a variable temperature across radial distances from its center; outputting the air from the top of the reaction vessel to a condenser; and condensing the air in a condenser into a distillate form.

Other aspects relate to a desalinator comprising: an intermodal shipping container, the shipping container compris-

ing: a lower portion forming a basin configured to store salty water, an upper portion, the upper portion comprising a lens and thermal conductor configured to receive salty water pumped from the basin to generate humid air, and drainage panels positioned between the lower portion and upper portion, the drainage panels configured to capture and remove any condensate formed in the shipping container, wherein the humid air is output to a condenser for condensation of water vapor, generating a lower pressure in the intermodal shipping container.

BRIEF DESCRIPTION OF DRAWINGS

Embodiments will be described, by way of example only, with reference to the accompanying figures in which:

FIG. **1** is a block diagram of a water desalinator, according to one embodiment;

FIG. **2** is a schematic diagram of a modular reaction vessel to be used in the water desalinator of FIG. **1**;

FIG. **3** is a schematic diagram of a thermal conductor to be used in a reaction vessel of the reaction vessel of FIG. **2**;

FIG. **4** is a schematic diagram of a condenser to be used in the water desalinator of FIG. **1**;

FIG. **5** is a schematic diagram of an alternate reaction vessel;

FIG. **6** is a cross-sectional view of a reaction vessel to be used in water desalinator, according to another embodiment; and

FIG. **7** is a block diagram of electronic inputs and output components used to manage the operation of the water desalinator of FIG. **1**.

DETAILED DESCRIPTION

FIG. **1** is a block diagram of a water desalinator **100** to be used for solar concentration, evaporation and humidification, according to one embodiment. Water desalinator **100** includes a reaction vessel **150** and a condenser **120**. A light source, such as the sun (not shown) emits rays of light into reaction vessel **150**. Reaction vessel **150** receives, as an input, ambient air **101** and input water **102**, and produces humid air **104**. As a by-product, hot brine water **103** may be also output. Reaction vessel **150** may also generate some output water **110**.

Humid air **104** is generally free of salt, and provided from reaction vessel **150** to condenser **120**, where humid air **104** is condensed using condenser coolant **106** to generate condenser output water **111**.

FIG. **2** illustrates the individual components of reaction vessel **150** of water desalinator **100**. These components can be grouped into rapid water vapor components **140** and surface evaporation components **142**. Both rapid water vapor components **140** and surface evaporation components **142** are housed in a container vessel **156**. Rapid water vapor components **140** include lens **152**, solar tracker **154**, thermal conductor **158**, and sprinkler head **160**. Rapid water vapor components **140** are situated proximate to the top of reaction vessel **150** in relation to the focal point of lens **152**. In the depicted embodiment, they are centrally located, but can be installed in any location that allows maximum solar concentration into the reaction vessel **150**. Surface evaporation components **142** are located below the rapid water vapor components **140**, and include a basin **176**, a water recirculation pump **172**, an intake vent **166**, an exhaust fan **178**, drainage panels **164**, and brine output **174**.

The external structure of reaction vessel **150** may be realized by a modular container vessel **156**. According to some embodiments, container vessel **156** is a standard intermodal freight container retrofitted for the purposes of this desalination process. Container vessel may be generally rectangular, having six faces each made of steel. In an example embodiment, an intermodal freight container may be used (or re-used). This pre-existing, modular shape can provide a low cost, robust option that can be deployed and shipped globally as standard practice. Container vessel **156** may have large and re-sealable double-sided doors on one or both ends of the container vessel **156** for access to internal components for routine maintenance. The external steel walls may be lined or coated with insulation and a thermoplastic layer (PVC, CPVC, etc.) suitable for heat and high saline water corrosiveness. In alternate embodiments, greenhouse type structures (not shown), or variant shapes such as circular domes could be used. In larger installations, plants may be added to interior of reaction vessel **150**, allowing container vessel **156** to have dual functionality of a conventional greenhouse, in addition to being a reaction vessel **150**. In these embodiments, greenhouse plants add additional moisture to the water desalinator **100** via transpiration.

Container vessel **156** can be converted from standard intermodal freight containers of varying length (10', 20', 40', 53', etc.). An intermodal freight container allows ease of transport and retrofit of existing materials. Walls of container vessel **156** are insulated to produce high content of water vapour and condensation. The walls of the reaction vessel **150** may be opaque, not allowing sunlight to enter, only through the lens **152**. Therefore, water desalinator **100** can capture and maintain the heat as production time elapses. Alternatively, container vessel **156** may be configured to use transparent walls, much like a greenhouse.

Container vessel **156** may further include components to combat the effects of corrosion and scale from the minerals in input water **102**. As a metal surface will start to accumulate with scale formation and salt deposits from the evaporated water, liner plates may be installed within container vessel **156** in a manner that will allow them to be removed, accessed, cleaned in place, or scraped as needed. According to other embodiments, in an effort to reduce scale formation and buildup, a low DC current may be applied to the electrically conductive components to counter-act the formation of scale.

Reaction vessel **150** receives as an input water **102** via input pump (not shown). Input water **102** is salty—and can be salt water, brackish water, industrial brine or sea water. Input water **102** can also be designed for other streams—mine water concentration, metals, brines, product recovery, contaminated or toxic effluents, etc. The feed flow rate of input water **102** through input pump (not shown) may be calculated dependent on the rate of evaporation realized in the reaction vessel **150**. Input water **102** may further act as a quenching solution for the condensate. Alternatively, input water **102** can be introduced to reaction vessel **150** using gravity from a larger holding tank (acting as a miniature water tower)— not shown. Input water **102** will typically be warm and saline. Depending on the source water, there may also be foaming that occurs in reaction vessel **150**. Conductivity, temperature, alkalinity, pH are some of the parameters of input water **102** that can be monitored using sensors in reaction vessel **150** communicating with a controller (not shown) for process performance.

Input water **102** may be stored in a basin **176** formed from the bottom of container vessel **156**. Basin **176** may take the form of a tub, or may simply be formed as the bottom of container vessel **156**. Other types of basins will be apparent to those of ordinary skill. The top surface of basin **176** is

exposed, allowing water vapour to rise from basin **176** within container vessel **156**. As the internal temperature of container vessel **156** increases (and eventually reaches steady state), water will evaporate from the exposed surface of the water in basin **176**, and rise as surface humidity **107**. The depth of the water in basin **176** may be suited for humid air generation, to allow significant wall surface exposure to increase surface evaporation in the vessel. Basin **176** will also be monitored for water quality (TDS, conductivity, temperature, etc.) through sensors communicable with a controller (not shown). Based on these sensor inputs, the basin water may be cycled through the basin and the water volume may be increased by allowing more water in, or decreased by letting water out, or cycled by doing both. A heater (not shown) may be installed in basin **176** to warm the water, increasing surface water evaporation during periods of low solar activity, such as during evenings and nighttime.

Water (in liquid form) in basin **176** is pumped from basin **176** to rapid water vapor components **140** using recirculation pump **172**. Recirculation pump **172** may, for example, be a low voltage, low flow and pressure (submersible) pump that may continuously recirculate water from the bottom of the container basin **176**, up through the sprinkler head **160**. The pressure of recirculation pump **172** may be adjusted through manual valves on each nozzle, or operate under automatic control based on controller input, having sensor information about the temperature of thermal conductor **158**. For example, recirculation pump **172** may be adjusted to have a higher flow rate for a higher reaction vessel **172** operating temperature, and lower flow rate for lower operating temperature. Output of recirculation pump **172** is the water sprayed on thermal conductor **158**.

Output of recirculation pump **172** is provided to sprinkler head **160**. Sprinkler head **160** may be a series of nozzles or perforations that direct water pumped from basin **176** on to thermal conductor **158** for evaporation thereon. The location, direction, position, and angle of the water from sprinkler head **160** can be adjusted manually or automatically using electromechanical components controlled by controller (not shown). Sprinkler head **160** may be configured to spray water at a position off-centre of the center of thermal conductor **158**. Water may be sprayed on thermal conductor **158** at a constant rate to limit deformation of the thermal conductor **158**, but to maintain a temperature at a specific position on thermal conductor **158** (i.e. water is sprayed on to the surface at a rate to keep the thermal conductor **158** at a constant temperature under steady state conditions). Alternatively, valves may open on a timer at a fixed or variable rate, allowing the water will flash on and off the thermal conductor **158**. This allows thermal conductor **158** to heat and cool down, then the process may continue in a batch mode. Specific rates may be modified based on environmental variables such as weather. For example, on a particularly sunny day, the concentrator may pump maximum water pressure for a maximum time. On a cold and dark day, water may be pumped far less frequently to maintain the limited heat on the thermal conductor **158**. Pump **172** may be a compact and submersible pump that is heat and corrosion resistant. Sprinkler head **160** may act as a throttling valve to reduce pressure in the passing liquid, encouraging flash evaporation in reaction vessel **150**.

The water sprayed from sprinkler head **160** will be evaporated off thermal conductor **158** and form water vapour. This water vapour will mix with the air in container vessel **156** to generate the humid air (i.e. with a high relative percentage of water vapor in air), in addition to the rapid flash of steam that would immediately condense. Relative humidity in container vessel **156** may be kept between 40% and 100%, controlled by the controller (not shown) by modifying operational parameters of the water desalinator **100**. If any water is not evaporated immediately off thermal conductor **158**, it will remain in liquid form and fall back down through opening **159** to basin **176** below, to be recirculated once again. Water pumped on to thermal conductor **158** will further operate to mitigate any potential heat deformation that may occur due to the concentrated solar energy.

As input water **102** contains salt and other minerals, some solid minerals may be deposited on thermal conductor **158** as input water **102** evaporates. A salt removal wash sequence may be applied, whereby fresh water or brine in the bottom of the insulated vessel could be allowed to be sprayed continuously, when the unit in not producing steam/water vapour, thereby removing/dissolving the scale build up in off production hours (i.e. at nighttime), rendering this a self-cleaning process. Alternatively, thermal conductor **158** could be physically removed periodically and placed in a solution that will dissolve any scale build up.

Thermal conductor **158**, according to some embodiments, may be a metal, metalloid form, alloy or coated plate with a thermal conductivity, melting point and thermal transmissivity suitable to allow for even, quick distribution of heat, without warping or melting at temperatures greater than 500° C. Further, thermal conductor **158** may be coated or treated to prevent or minimize corrosion. Thermal conductor **158** may be made of multiple metals. Thermal conductor **158** may be affixed to the reaction vessel itself using a mounting bracket or other attachment means, or may be connected to the drainage panels **164** (which may themselves connected to the side walls of container vessel **156**). The solar thermal energy is received in the center of thermal conductor **158**, and radiates downward and outward through thermal conductor **158**, generating a variable temperature based on radial distance from the thermal conductor's core. Thermal conductor **158** may include temperature sensors operable to communicate temperatures on the thermal conductor **158** at different positions, which can in turn provide feedback for solar tracking optimization.

The relative humidity close to the surface of the thermal conduction **158** will be the lowest in the reaction vessel **150**, as there is significant latent heat produced by the thermal conductor **157** during operation. Relative humidity will increase at greater radial distances from the center for the thermal conductor **158** disc as water vapour is produced and evaporated. Thermal conductor **158** may have flared edges or grooves to reduce water droplet scattering due to the Leidenfrost effect (wherein a liquid close to a significantly hotter liquid produces an insulating vapor layer to keep the liquid from boiling rapidly). Because of this repulsive force, a droplet hovers over the surface rather than making physical contact with the hot surface. If water does fall off of thermal conductor **158**, the water will fall through opening **159** and will splash into basin **176**. The splashes generated by falling water will generate greater surface area in basin **176**, thereby increasing the surface evaporate **107**.

Thermal conductor **158** is heated by rays of light **132** focused by lens **152**. The solar energy from rays of light **132** can concentrate as solar thermal energy. The thickness, size and material (glass, water, plastic, epoxy, etc) of lens **152** will depend on the enclosure volume. According to some embodiments, lens **152** is one of a magnifying glass, Fresnel lens, and water lens. Dependent on the type of lens **152**, individual optic components may be modified to optimize the lens **152** for the intended purpose of desalination. For

example, the geometric properties of the lens **152** may be modified. In cases where the lens **152** is a Fresnel lens, the shape and configuration of any successive concentric rings or steps of the lens may be defined or configured. The amount of energy that can be concentrated on the surface of the thermal conductor **158** would be in the range of 500 kW/m^2, with temperatures ranging up to from 700° C.-900° C. Thermal conductor **158**, therefore acts as an internal heater in the container vessel **156**, further creating opportunities for evaporation.

Lens **152** is connected to and may be repositioned by solar tracker **154**. Solar tracker (or heliostat) **154** is a movable apparatus configured to swivel, turn and rotate the lens **152**. The solar tracker **154** will mimic the sun tracking much like a sunflower rotates and follows the sun throughout the day (and then repositions itself to start again in the morning). Solar tracker **154** is attached to container vessel **156** and will reposition lens **152** to optimize the water desalinator **100** to generate the maximum amount to output water **111** as programmed by a controller (not shown). The height of lens **152** can also be adjusted by solar tracker **154** to accommodate different configurations or types of lenses **152** (for example, one using a different type of lens). Solar tracker **154** is also configured to isolate the container vessel **156** to capture moisture, humid air and steam. Solar tracker **154** contains the area between lens **152** and container vessel **156** using a flexible sheet of insulating, air tight material that will prevent the steam and water vapour from escaping into the external atmosphere. The insulating material is flexible enough such that it will not impede the movements of lens **152** controlled by solar tracker **154** to track the suns position across the sky. Insulating material also acts as a vapour barrier to keep the humid air in the container. Any condensation that is generated on insulating material can be routed to a trough (not shown) and then collected. For maintenance purposes, the insulating material can be easily removed to allow an operator access to the top portion of the container, the thermal conductor, nozzles, etc.

Solar tracker **154** may be formed using servomotors or any other adjustable mechanical or electromechanical system that may reposition the lens **152** along a transverse or rotational axis. Solar tracker **154** may for example adjust the anchor points of the lens **152** in three dimensions. Solar tracker **154** is designed to withhold the weight of the lens and is stable enough to remain fixed, damping any vibration from operation or any undue weather. Solar tracker **154** may include a robotic arm to control the distance from thermal conductor **158** to the focal point of lens **152**.

Some water may condense within reaction vessel **150** before being output through output vent **178**. In order to capture as much condensate droplets **110** as possible, drainage panel or impervious coverings **164** are to be attached to container vessel **156**. Any condensate droplets **110** that form above drainage panels **164** travel down along drainage panels **164** and out condensate output pipes **180**. A controllable valve may be placed before output pipes **180** to optionally determine whether to allow for condensate to flow through. Drainage panels **164** may be formed from a galvanized metal, stainless steel or similarly suitable material for use in high temperature, high saline, and high humidity environments. Drainage panels **164** extend from the walls of container vessel **156** to a position below the surface evaporation components **142**. According to some embodiments, drainage panels **164** extend from all walls of the container vessel **156**. According to other embodiments, drainage panels **164** only extend from some walls of container vessel **156**. Drainage panels **164** may take the form of a truncated hollow cone or truncated pyramid, with top position having a rounded or squared opening **159**. Opening **159** can be realized outside of the projected circumference of thermal conductor **158**. Condensate will thus not fall back into the basin **176** below, but will flow down the side of the drainage panel and enter a collection piping system to output as output water **110**. Drainage panels **164** may alternatively form a convex or concave loop to capture and isolate the moisture once it has condensed while still preventing the moisture from returning into basin **176**. Optionally, a purge valve (such as a solenoid valve) may be connected to the drainage panel **164** runoff system.

The purge valve may be controlled by controller (not shown) to open at a predetermined time or rate to avoid heat loss and vacuum loss in the container. Any condensate that may form below drainage panels **164** may fall down into basin **176**. According to some embodiments, there are be multiple drainage ports to allow the collected condensate to trickle and drip into a common header to be sent to a fresh water storage tank.

As input water **102** in basin **176** evaporates, the saline concentration and temperature of water in basin **176** will increase (when the reactor is in operation). Therefore, there is a need to remove water in basin **176**. Reaction vessel **150** outputs warmer hot brine water **103** through brine water output pump (not shown) or via gravity drainage and a hand or solenoid valve This warmer water will be removed as hot brine water **103** and replenished with additional input water **102**. The extraction process, according to some embodiments, can be based on a depth level in the collection basin (i.e a valve may be opened until a lower level is reached, then fresh feed will be added). According to other embodiments, extraction of hot brine water **103** is based on sensed measurements of temperature, total dissolved solids (TDS), conductivity, etc. The optimal concentration and temperature of the brine solution will depend on a number of factors, such as the scaling formation issues in the reaction vessel **150**, optimum evaporation rates, etc. Hot brine water **103** can be further evaporated in another downstream reaction vessel **150** (multiple reaction vessels **150** can be arranged in series to generate a solid, making this a fully zero liquid discharge process), discharged back into an input pool, or used in an alternative industrial purpose as a higher salinity brine.

Container vessel **156** may allow ambient air **101** to enter through ambient air intake **166**. To allow for evaporation to occur, as well as condensation in reaction vessel **150**, cooler external air can be introduced with the addition of vents or fans. Ambient air intake **166**, may be controlled manually or electromechanically using servomotors or a controller. Additional air intake vents **166** may be positioned throughout container vessel **156**. Ambient air intake **166** can be throttled open to closed. This allows ambient air **101** that is cooler and dryer to enter the container. Ambient air intake **166** may be configured to modify its input allowance in order to sustain a relative humidity setpoint within container vessel **156**. Alternatively, the ambient air intake **166** may be configured to sustain a specific air temperature in the upper level of the container.

Incoming air velocity will be dependent on the size of the vent opening as well as the size of the extraction fan. The extraction fan(s) will be rated anywhere from 300 standard cubic feet per minute (scfm) to 10,000 scfm (or greater depending on the size and number of container vessel **156** employed). When a pressure lower than atmospheric pressure is achieved in the reaction vessel, the ambient air intake **166** can be programmed to open at 10% (0-100% open)

intervals, which will be controlled via the relative humidity, and temperature in the reaction vessel. The anticipated airspeed of extraction air (humid/moist), arising from a combination of the extraction fan and ambient air intake will be in the range of 2-30 m/s. The goal of the air extraction is to remove as much water vapor from the reaction vessel **150**, and not have any desalted water return to the basin **176** as condensate drips. In order to consistently maintain a constant relative humidity of 100%, the dew point temperature and dry bulb temperature should be close to 37.8° C.

The two types of humid air generated in the reaction vessel (namely humid air **107** as generated from surface of basin **176**, and humid air **162** from thermal conductor **158**) may be output to condenser through air exhaust fan **178**. Air exhaust fan **178** provides air movement within the vessel, enhancing condensate of water droplets. If air exhaust fan **178** continues to output humid air **107** while ambient air intake **166** is closed, the pressure of internal container vessel **156** will decrease. With a lower internal container vessel **156** pressure, the rate of the surface evaporation of water in basin **176** will be increased. This vacuum will be produced because the reaction vessel **156** is an air tight enclosure, with the exception of the air intake port, **166** which will not be open all the time, and the extraction fan **178**, which will create the vacuum effect in the vessel. An increase in airflow rate and velocity of air over the surface of the water air interface will also increase rates of evaporation. Reaction vessel **150**, which has a goal to achieve a constant relative humidity of 100%, will therefore be foreseen to remove saturated air at a higher rate. Additional exhaust fans may be added to the top, middle and bottoms of reaction vessel **150**. The performance of air exhaust fan **178** may be controlled with ambient air intake **166** to avoid condensation from occurring inside the reaction vessel **150**, as opposed to the external air condenser. Communication and feedback between the air exhaust fan **178** and ambient air intake **166** will also provide the opportunity to create a slight vacuum in the container vessel **156**. Having a vacuum in reactor **156** will cause the pressure in the container vessel **156** to be reduced, allowing the liquid to evaporate at a lower temperature (and thereby faster) than what would be experienced under normal barometric conditions. As the reaction vessel **150** will be operated as air tight, the extraction fan will continue to remove moist/humid air, while the pressure in the container can achieve 5-10 inches of H_2O of negative pressure (from a water manometer).

FIG. **3** illustrates side and top views of thermal conductor **158**, isolated from remaining components of container vessel **156**. Thermal conductor **158** has a height h and radius r. The side profile of thermal conductor **158** further illustrates the shape in which the thermal conductor may take. As can be seen, thermal conductor **158** is largely curved on its top edge, however at a particular radial distance from the centre will begin to form a linear tangential. Thermal conductor **158** may be formed of a solid material. Alternatively, thermal conductor **158** may form a shell. If thermal conductor **158** forms a shell, the shell may have constant or variable thickness at varying radial distances from the centre of thermal conductor **158**. While the side profile shape in FIG. **3** is illustrated, other side profiles, shapes and configurations may be employed. For example, rather than a curved top on thermal conductor **158**, a cone having a less steep gradient may be employed. Alternatively, thermal conductor **158** may be entirely rounded, oblong, ovaloid, square, rectangle, triangular, octagonal, etc.

Based on the shape and material thermal conductivity of thermal conductor **158**, a temperature gradient will be realized as the radial distance extends from the core (i.e. the centre of the thermal conductor **158**) towards the radius r. The nature of this temperature gradient will be based on the material and geometric properties of the thermal conductor; however, the hottest point will be at the core, and the coolest point will be at the edges (i.e. radius r). For example, thermal conductor **158** may be composed of multiple sections, with each section made of a different metal or metal alloy. Accordingly, sprinkler head **160** (see FIG. **2**) may be controlled using sensor data from thermal conductor **158** to determine the appropriate position having a radial distance to spray water to maximize humid air output. By spraying the radially outward areas of the core, evaporation will occur while preventing the thermal conductor from melting or warping.

FIG. **4** illustrates condenser **120**, along with its internal components. Heat Exchanger **114** is positioned where most of the humid, moist air from the reaction vessel will be allowed to cool and condense. Condenser **120** receives, as an input, humid air **104** from reaction vessel **150**. The humid air is passed through heat exchanger **114** in order to output fresh water **111**. Condenser **120** is cooled using coolant **106**.

Humid air that is extracted from the reaction vessel **150** will direct the humid air **104** into a coil such as heat exchanger **114** that can be chilled in a submersed tank/vessel of coolant **106**. Coolant **106** in heat exchanger **114** may be from the same source as input water **102**.

Alternatively, feed water **106** can be pumped through the heat exchanger **116** (rather than submersing a pipe in the coolant **106**). Then, moist air from the Humid Air Extraction system is sent into this vessel/tank and water vapor condenses along this piping system, and the output water **111** is allowed to collect/drip down to a basin below, where it is collected.

As output water **111** is intended for non-potable water uses (e.g. for agriculture, irrigation, toilets, cooling, chilling systems, etc.); the final water quality does not have to meet drinking water regulations. Output water may be further disinfected and/or filtered if its will be used for drinking water purposes.

In alternate embodiments, multiple reaction vessels **150** may be installed in series or parallel configurations, or may operate using a dome structure sharing a lens **152** where one larger solar lens is employed. The system of reaction vessels **150** and condensers **120** may be duplicated in series and parallel, creating a network with multiple stages of maximum heat and energy recovery. Warm brine **103** (once it reaches a certain temperature and/or salinity or total dissolved solids level) can be extracted from the first stage, and introduced into the second stage, further evaporating more water from the brine solutions. Outputted brine may be processed in a crystallizer or solar pond for further commercial processes (such as solid salt crystal generation or used in the lithium production process.

The yield of output water **111** produced from condenser **120** will depend on numerous factors from the reaction vessel **150**: size and type of lens configuration, surface area of thermal conductor, water vapour extraction, air velocity, mass air flowrate, condensation system efficacy, scaling control, surface area of water evaporation, etc. Further, the output may be varied based on the temperature of coolant **106**. According to some embodiments, coolant **106** may be replaced by an alternative industrial coolant (rather than feedwater) coolant having its own thermal properties. According to some embodiments, coolant may be hot brine output **103** retrieved from the basin **176**.

FIG. **5** illustrates a reaction vessel **150'** according to an alternative embodiment. According to this embodiment, a single container vessel **156'** having surface humidity components **142'** may be used with multiple rapid water vapor components **140'**, on the top of the reaction vessel **150'** or on the sides. In these embodiments, a single basin **176** is still used, however multiple lenses **152**, thermal conductors **158**, and sprinkler heads **160** are employed. According to some embodiments, a single pump **172** is employed to deliver water from basin **176** to the surface evaporation components **140'-1**, **140'-2**, and **140'-3**. The piping from pump **172** to sprinkler heads **160** will necessarily need to be modified to allow the intersectional connections. According to some embodiments, multiple pumps **172** may be used in parallel. In further embodiments, the reaction vessels can also utilize the sides of the container **156** where similar rapid water vapor components **140** can be installed to utilize the suns radiation from all sides of the reaction vessel.

FIG. **6** illustrates a cross-sectional view of a further reaction vessel **150"** to be used in a water desalinator, according to a further embodiment. In this embodiment, sheets **192** may be inserted internally across the container vessel **156**. Sheets **192** may be a cotton, mesh, or any other suitable synthetic fabric, coated with a hydrophobic coating. Humid air can collect on the surface of either side of sheets **192**. This adds to the available surface area for evaporation, as well as water vapor harvesting. Water vapor will collect and trickle down to be collected through bottom collection troughs **191** supported on platform **190**, itself affixed to the walls of container vessel **156**. Troughs **191** are placed at the bottom of sheets **192**, and form a convex shape (such as a half pipe) to collect drops as they accumulate and form on both sides of the mesh fabric.

Sheets **192** are suspended from fasteners **194** positioned under drainage panel **164**. According to some embodiments, fasteners **194** may be horizontally level with each other. When fasteners **194** are horizontally level with each other, fasteners **194** may be a slider mechanism, such that there is a greater ease for insertion and removal of sheets. According to some embodiments, wires, may alternatively or additionally be vertically hung throughout the reaction vessel **150"**. These wires would function similarly to the sheets **192**,

According to other embodiments, fasteners **194** may traverse along the internal underside contour of drainage panel **164**. In these embodiments, the sheets **192** may be of variable sizes and have greater surface area for generation of additional humidity and water vapor harvesting.

Electronic components within the water desalinator **100** may be configured to operate using AC or DC power. According to embodiments that require AC, the water desalinator **100** may be optimized for conventional household voltages, such that the system may be operated using a standard residential electrical plug. Alternative AC embodiments may be optimized for the local voltage and frequency. According to other embodiments, DC components using a constant voltage may be used.

FIG. **7** is a block diagram of electronic inputs and output components used to manage the operation of water desalinator **100**. Sensors, valves and actuators, may be employed and configured to communicate with a controller **400**. Controller **400** may be a programmable logic controller (PLC), such as a unit chosen from the Logix 5000 series devices made by Allen-Bradley/Rockwell Automation, such as the ControlLogix 5561 device. Individual functional components of controller **400** may include a processor, memory, and network interface. Memory may store instructions that when executed by processor perform the actions as described. Controller **400** may receive further input through a network interface to a local area or the internet to allow for remote operation and receive external data, such as operational and environmental requirements. Components managed using controller **400** which may operate to perform the functions of the controller as described in regard to previous figures. While illustrated as a single controller **400**, the operations may be divided into a plurality of controller units with specified instructions. Controller **400** may include a memory and processor. The processor will execute instructions stored on the memory to perform the operations as defined. Controller **400** is communicably linked to sensor and actuators via a communicative protocol such as RS232, Bluetooth™, WiFi, etc. Sensors and actuators may include, for example, a weather sensor **402**, a thermal conductor temperature sensor **404**, a basin water sensor **406**, a vessel humidity sensor **408**, a feed water valve control **410**, a hot brine valve control **412**, an exhaust control **414**, an ambient air control **416**, a sprinkler head pressure valve **418**, a sprinkler head direction actuator **420**, a solar tracker control **422**, and a drainage panel valve control **424**. The individual function of each control module will be described hereinafter. The operation of the complete system is anticipated to eventually leverage artificial intelligence and machine learning to maximize output yield and performance based on external conditions (weather, solar irradiance, geographical location, elevation, etc.) and internal conditions from the feedback of instrumentation, sensors (temperature, humidity, water quality, salinity, etc.) and IoT.

Weather sensor **402** may include an anemometer, thermometer, rain meter, and a sensor configured to detect the position of the sun in the sky. Using this information, controller **400** will determine the appropriate position to direct lens **152** and communicate with solar tracker **422** to instruct any actuators or motors to position the lens **152** accordingly. The intended operation and function of the tracking lens biomimics that of a young sunflower plant, which tracks the sun throughout the day, always facing directly perpendicular the sun, to maximize exposure.

Thermal conductor sensors **404** operate to evaluate the temperature on thermal conductor **158**. These sensors may be embedded into the thermal conductor **158** and communicatively linked to the controller **400**, or may be a plurality of wireless sensors (such as infrared temperature sensors) configured to evaluate the temperature at points across the thermal conductor **158**. Using this information, controller **400** may instruct the sprinkler head pressure valve **418** and the sprinkler head direction actuator **420** to modify the rate or position at which water is sprayed on thermal conductor **158**.

Basin water sensor **406** measures the depth, temperature, and mineral content of water in basin **176**. The sensor is communicatively linked to controller **400**, which may adjust the water in basin **176** using feed water valve control **410** to allow new input water **102** in, or hot brine valve control **412** to allow hot brine water **103** out.

Vessel humidity sensor **408** monitors and measures the percentage of water vapour in the container vessel **156**. Vessel humidity sensor **408** is communicatively linked to controller **400**, which may adjust the amount of humid air output **104** through the speed or pitch of exhaust fan **178** via exhaust control **414**, or the ambient air **101** allowed in through intake vent **166** via ambient air control **416**. Vessel humidity sensor **408** may include a wet bulb temperature sensor.

Drainage panel valve control **424** monitors the amount of condensate that has formed across drainage panels **164**. If

the condensate formed in drainage panels **164** exceeds a defined amount, the drainage panel valve control **424** will signal to allow condensate through output pipe **180**.

The process is considered an off-the-grid system as it does not require any process chemicals, nor does it require high voltage electrical equipment, and it is operated continuously (provided the required solar circumstances) under ambient conditions and atmospheric pressures. The recirculation water pump, air extraction fan, solar tracking system, and instrumentation can all operate at 110-220 VAC and/or solar powered.

Although a combination of features is shown in the illustrated embodiments, not all of them need to be combined to realize the benefits of various embodiments of this disclosure. In other words, a system or method designed according to an embodiment of this disclosure will not necessarily include all of the features shown in any one of the Figures or all of the portions schematically shown in the Figures. Moreover, selected features of one example embodiment may be combined with selected features of other example embodiments.

Although this disclosure has been described with reference to illustrative embodiments, this description is not intended to be construed in a limiting sense. Various modifications and combinations of the illustrative embodiments, as well as other embodiments of the disclosure, will be apparent to persons skilled in the art upon reference to the description. It is therefore intended that the appended claims encompass any such modifications or embodiments.

The invention claimed is:

1. A method of solar concentration, evaporation and humidification, the method comprising:

directing, from an input source via a first conduit, salty water into a basin of a reaction vessel;

storing the salty water in the basin;

evaporating at least a portion of the salty water from the surface of the basin to rise to a top of the reaction vessel;

pumping the salty water from the basin via a second conduit to a thermal conductor to be vapourized,

wherein said thermal conductor is:

heated using a lens, and

said thermal conductor has a variable temperature across radial distances from its center;

outputting air from the top of the reaction vessel to a condenser; and

condensing water vapor in the air in the condenser into a distillate form.

2. The method of claim **1**, wherein the lens is a fresnal lens.

3. The method of claim **1**, further comprising repositioning the lens in dependence on the relative position of the lens to the sun.

4. The method of claim **1**, wherein the salty water is provided to a sprinkler head configured to have a variable off-center spray position.

5. The method of claim **1**, further comprising gathering condensate generated in the reaction vessel using drainage panels, said drainage panels extending from walls of the reaction vessel to an opening under the thermal conductor and configured to direct condensate to a condensate output.

6. The method of claim **5**, further comprising gathering condensate from the reaction vessel using sheets suspended from the drainage panels, said sheets configured to trap moisture.

7. The method of claim **6**, further comprising troughs situated at the bottom of said sheets, said troughs configured to direct condensate to a second output.

8. The method of claim **5**, further comprising gathering condensate from the reaction vessel using wires suspended from the drainage panels, said sheets configured to trap moisture.

9. The method of claim **8**, further comprising troughs situated at the bottom of said wires, said troughs configured to direct condensate to a second output.

10. The method of claim **1**, wherein the thermal conductor is a rounded conical shape made of at least two materials having different thermal conductivities.

11. The method of claim **1**, further comprising:

closing an input vent while running an extraction fan in the reaction vessel, thereby lowering pressure in the reaction vessel.

* * * * *