V. R. HANSON.

KNOTTER HOOK FOR BINDERS.

APPLICATION FILED JAN. 6, 1915.

1,176,216.

Patented Mar. 21, 1916.

Fig. 2

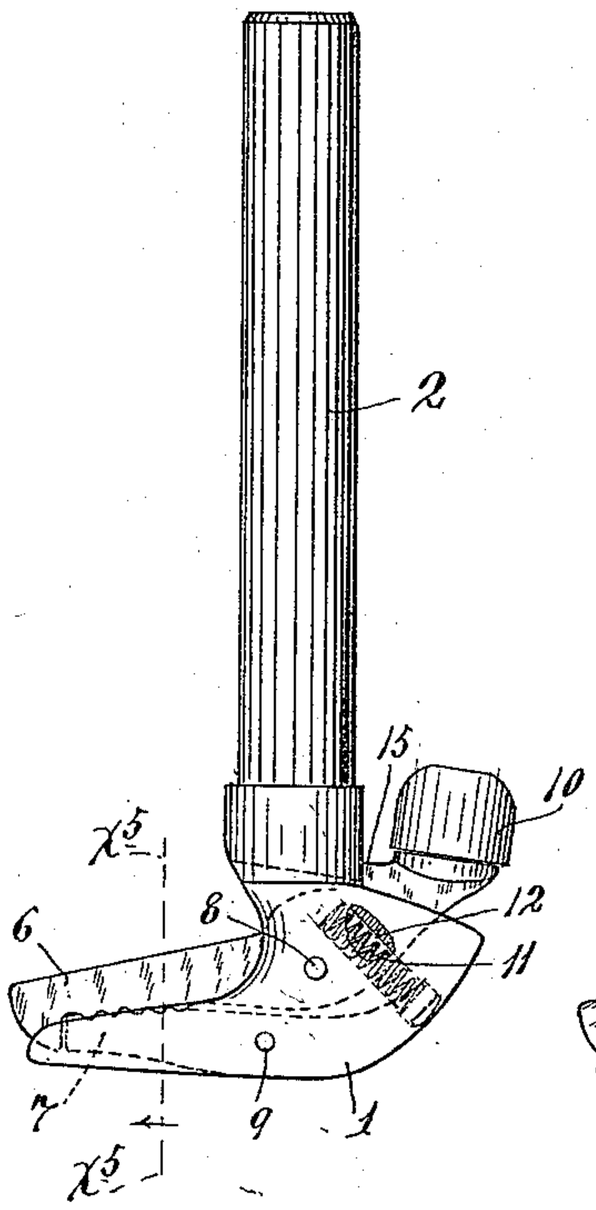

Fig. 3

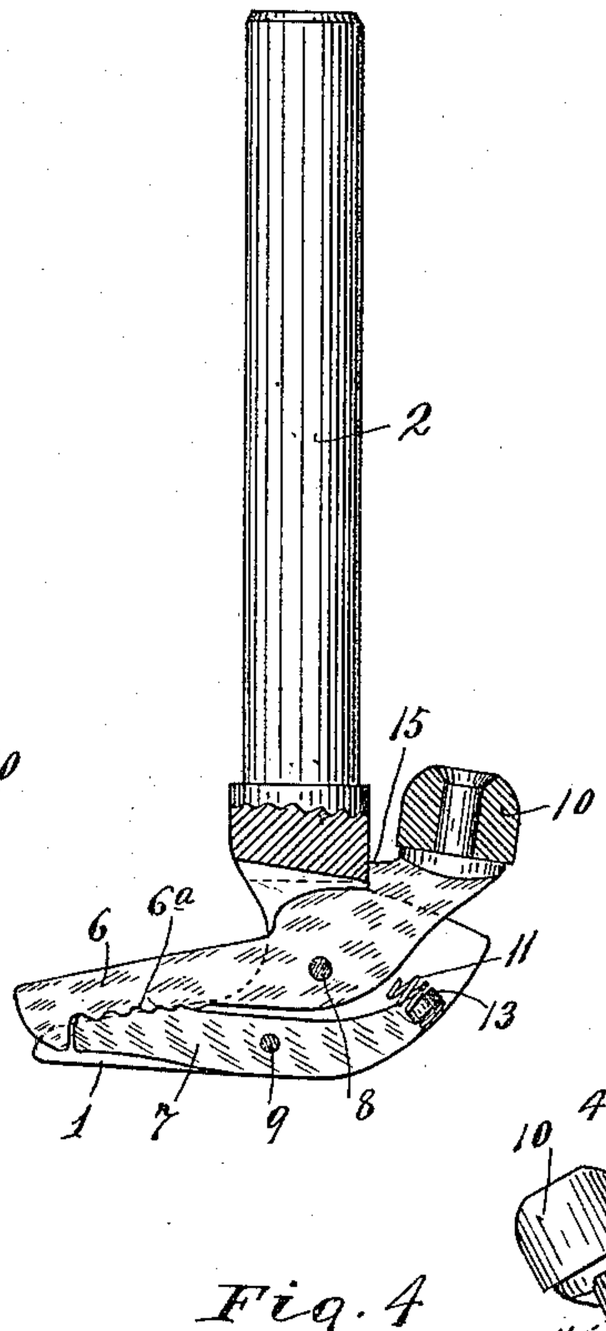

Fig. 1

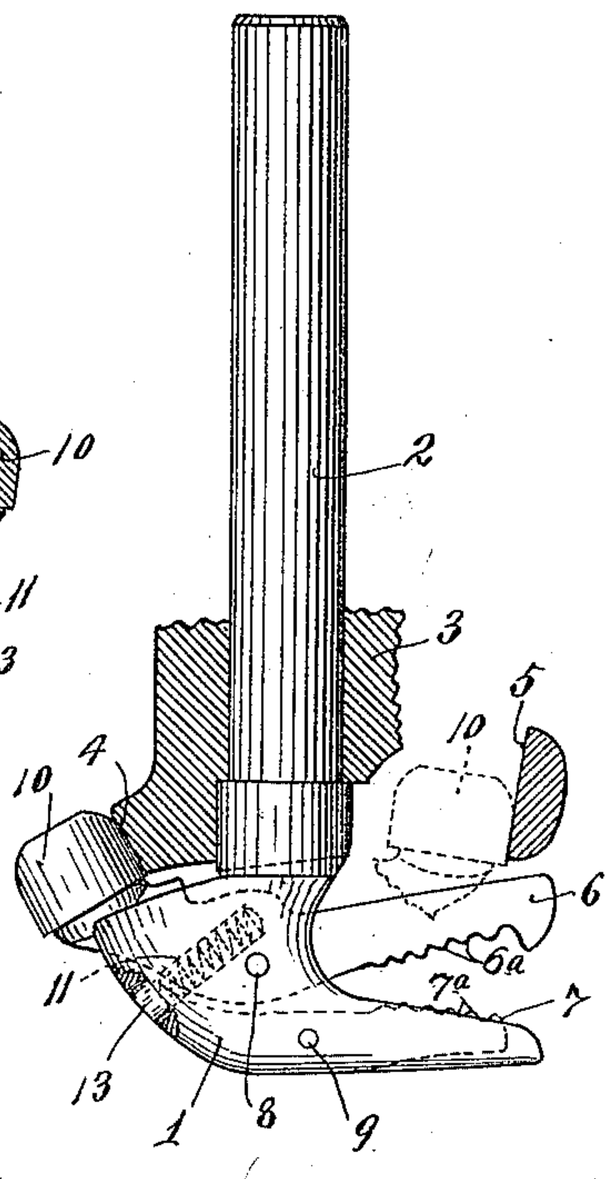

Fig. 4

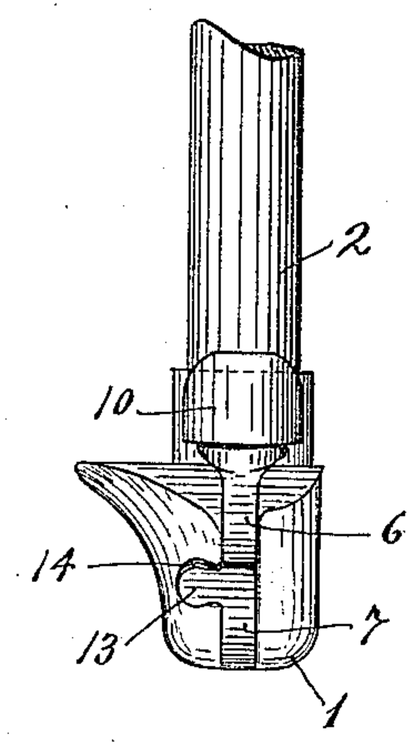

Fig. 5

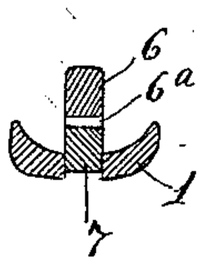

Witnesses

A. H. Opsahl

E. C. Skinkle

Inventor.

Victor. R. Hanson.

By his Attorneys

Williamson & Merchant

UNITED STATES PATENT OFFICE.

VICTOR R. HANSON, OF MINNEAPOLIS, MINNESOTA.

KNOTTER-HOOK FOR BINDERS.

1,176,216. Specification of Letters Patent. Patented Mar. 21, 1916.

Application filed January 6, 1915. Serial No. 775.

To all whom it may concern:

Be it known that I, VICTOR R. HANSON, a citizen of the United States, residing at Minneapolis, in the county of Hennepin and State of Minnesota, have invented certain new and useful Improvements in Knotter-Hooks for Binders; and I do hereby declare the following to be a full, clear, and exact description of the invention, such as will enable others skilled in the art to which it appertains to make and use the same.

My invention has for its object to improve the construction and operation of knotter hooks of twine binders, and generally stated, the invention consists of the novel construction and combination of parts hereinafter described and defined in the claims.

More specifically stated, my invention has for its object to provide an improved knotter hook which is automatically adjustable and universally adaptable for use to tie knots in binding twine of greatly varying diameter and quality, or in other words, which will operate efficiently to tie knots in very small twine, or in very large twine, or in those cheap grades of loosely made twine which vary at different lineal points both in diameter and compactness.

The above objects are accomplished by the provision of a yielding secondary jaw, set into a slot in the bifurcated foot portion of the hook and arranged for coöperation with the primary cam-actuated jaw of the hook.

The invention also involves certain other highly important features, as will hereinafter appear.

In the accompanying drawings which illustrate the invention, like characters indicate like parts throughout the several views.

Referring to the drawings: Figure 1 is a view in side elevation showing the improved knotter hook complete and showing also portions of one of the bearings and the cams for actuating the primary jaw of the hook; Fig. 2 is a side elevation of the hook looking at the opposite side from that shown in Fig. 1; Fig. 3 is a view corresponding to Fig. 2, but with certain parts sectioned and some parts broken away; Fig. 4 is a rear elevation of the complete knotter hook; and Fig. 5 is a detail in section taken on the line x^5 x^5 on Fig. 2.

The knotter hook 1, except as hereinafter noted, is of the usual form, and it is either formed as an integral part of, or otherwise rigidly secured to the customary shaft 2, which, in practice, will be rotated in the usual way. The lower end portion of the shaft 2 is journaled in a bearing 3 which has the usual cam surfaces 4 and 5 for operating the knotter jaw, which, in this instance, is the primary jaw of the hook.

In accordance with my invention, the foot and body portion of the hook 1 are bifurcated to afford seats for a pair of coöperating twine clamping jaws 6 and 7 that are intermediately pivoted to the said hook, respectively, by pins 8 and 9. The jaw 6 corresponds in a general way to the usual knotter jaw and is provided at one end with the customary anti-friction roller 10 that is subject to the cam surfaces 4 and 5, under rotation of the knotter hook. In this improved knotter hook, the jaw 6 is treated as the primary jaw and the jaw 7 as the secondary jaw. These two jaws are provided with cooperating serrated surfaces 6^a and 7^a, respectively, which, when the jaws are forced together, interlap in such manner that they will grip the smallest kind of twine. The secondary jaw 7, at that end which is under the roller-equipped end of the primary jaw 6, is subject to a coiled compression spring 11 that is set into a suitable seat 12 formed in the body of the hook 1. The said seat 12 is laterally offset from the plane of the jaws 6 and 7 and the secondary jaw 7 is provided with a laterally offset lug 13 against which the said spring 11 re-acts, with a force tending to hold the said secondary jaw in the normal position indicated in the several views of the drawings. It is important to note (see particularly Figs. 3 and 5), that the bifurcated foot portions of the hook 1 are made concavo-convex, so that they form a sort of a channel above the bottom of which the serrated edge of the secondary jaw 7 projects upward. In fact, the serrated edge 7^a of the said jaw 7, preferably, projects normally slightly above the upturned outer edge flanges of the bifurcated foot portion of the said hook 1. It will also be noted that the extreme end of the primary hook 6 is increased in depth or formed with a sort of a lug that overlaps with the outer end of the secondary hook 7.

Under rotation of the knotter hook, when the roller 10 is forced against the cam surface 4, the primary hook 6 will be raised to its extreme position indicated by full lines

in Fig. 1, and when the said roller 10 is forced against the cam surface 5, as indicated by dotted lines in Fig. 1, the said primary hook will be forced downward to its extreme position indicated in Figs. 2 and 3. When the above noted movement of the primary hook takes place with no twine in the hook, the serrated surfaces 6ª and 7ª of the said hooks 6 and 7, are simply forced into engagement, but little or no movement will be given to the secondary hook. When, however, the said movement of the primary hook takes place while twine is between the two jaws, the said secondary hook will be depressed a distance depending on the diameter of the interposed twine. The tension of the spring 11 must be such that the twine gripping engagement of the hooks 6 and 7, therewith, will securely hold the twine against slipping, while the knot is being tied. The channel-shaped form of the bifurcated portion of the hook permits the serrated end of the secondary jaw 7 to be depressed at various distances without bringing the twine tightly against the bottom of the said channel. At the same time, when the jaw 7 is depressed to any considerable extent, the twine will be kinked over the edge flanges of the foot of the hook and the twine-holding action thereby increased.

By referring to Fig. 1, it will be noted, that when the primary jaw 6 is raised to its extreme position, its roller-equipped end engages the underlying end of the secondary jaw 7, so that it thus serves to positively insure return movement of the said secondary jaw to its normal position after each depression, and prevents the said secondary jaw from being wedged, by portions of the twine or portions of straw in a depressed position.

It is therefore evident that this improved knotter hook will automatically adapt itself to different kinds, grades and sizes of twine. It should be further noted that the offset lug 13 of the secondary jaw 7 works in a recess 14 formed in the body of the hook 1 and that the engagement of this lug with the walls of said recess limits the extreme movements of said secondary jaw. Also, it should be noted that the primary jaw 6 is provided at its roller-equipped end with a stop shoulder 15 that engages with the lower end of the shaft 2, to limit the extreme downward movement of the serrated end of the said primary jaw. Furthermore, the concavo convex or channel-shaped cross sections of the bifurcated foot portion of the hook, afford channels into which the cut ends of the twine may be forced to facilitate the slipping of the tied knot off the hook.

In actual practice, it has been found that it will tie knots in ordinary wrapping twine, in very large cheap grades of irregularly and loosely formed binding twine, and also, of course, in the various intermediate grades and sizes. The knot tied by this knotter is, as will be understood, that tied by various knotter hooks now in general use in twine binders. For example, the knot tied is that originally tied by the well known Appleby binder, and which is now either in the original or slightly modified form used in the McCormick, Deering and various other binders manufactured by the International Harvester Works, and of other concerns. The improved hook has all of the advantages of the standard knotter hook and has in addition, the various highly important advantages above set forth.

What I claim is:

1. A knotter hook comprising a shank and a foot projecting laterally from one end thereof, two coöperating jaws pivoted to said foot for movements toward and from each other, and in respect to said foot, and means for moving one of the said jaws in the knot tying action.

2. A rotary knotter hook comprising a shank and a rigidly connected foot projecting laterally from one end thereof, a pair of coöperating jaws pivoted to said foot for movements toward and from each other and in respect to said foot, yielding means normally holding one of said jaws in a predetermined position in respect to said foot, and means for moving the other jaw toward said yielding jaw under rotation of said knotter hook.

3. A knotter hook comprising a shank having at one end a laterally projecting foot, a positively operated primary jaw pivoted to said foot, and a coöperating yieldingly held secondary jaw also pivoted to said foot, the twine engaging portion of said secondary jaw being normally above the cord-engaging face of the said foot, and adapted to be depressed variable distances to automatically adapt the knotter to cord of different size.

4. A knotter hook comprising a shank having at one end a laterally projecting bifurcated foot portion, the said bifurcated foot portion being concavo-convex in cross section, and primary and secondary twine clamping jaws pivotally connected in the bifurcated portion of the body of said hook, the said secondary jaw being yieldingly held in normal position, and the said primary jaw being capable of predetermined movements in the knot-tying action.

5. A rotary knotter hook comprising a shank and a foot rigidly secured to one end of said shank and projecting laterally therefrom, the projecting portion of said foot being bifurcated and the said bifurcated portion having a channel-shaped cross section, primary and secondary jaws pivoted to said foot, the latter being located in the bifurca-
tion of said foot, a spring yieldingly hold-

ing said secondary jaw with its upper free end portion above the bottom of the channel of said foot, and means for positively moving said primary jaw toward said secondary jaw in the knot-tying action.

6. A knotter hook comprising a shank having at one end a laterally projecting foot, coöperating primary and secondary twine clamping jaws pivoted to said foot, the former of which jaws, at one end, is equipped with a roller and provided with a stop shoulder for limiting one movement thereof, and the latter of which jaws is provided with an offset lug working in a recess in the body of said hook, and a spring set into the body of said hook and compressed between the same and the offset lug of said secondary jaw.

7. A knotter hook comprising a shank having at one end a foot projecting laterally therefrom, and coöperating primary and secondary jaws pivoted to said foot, one of the said jaws having at its free end a projecting lug that overlaps the end of the other jaw when the two jaws are closed together.

In testimony whereof I affix my signature in presence of two witnesses.

VICTOR R. HANSON.

Witnesses:
HARRY D. KILGORE,
F. D. MERCHANT.

Copies of this patent may be obtained for five cents each, by addressing the "Commissioner of Patents, Washington, D. C."