H. W. MASS.

ARTICLE HOLDING ATTACHMENT FOR RECEPTACLES.

APPLICATION FILED FEB. 10, 1915.

1,161,237.

Patented Nov. 23, 1915.

Fig. 1

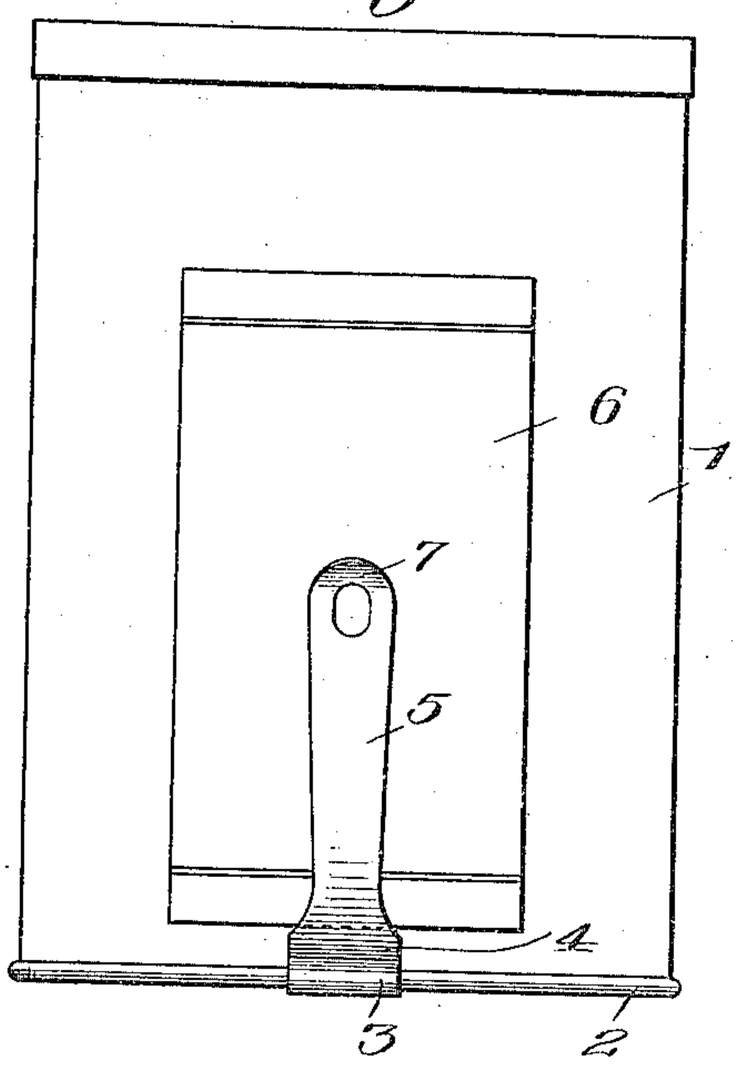

Fig. 2

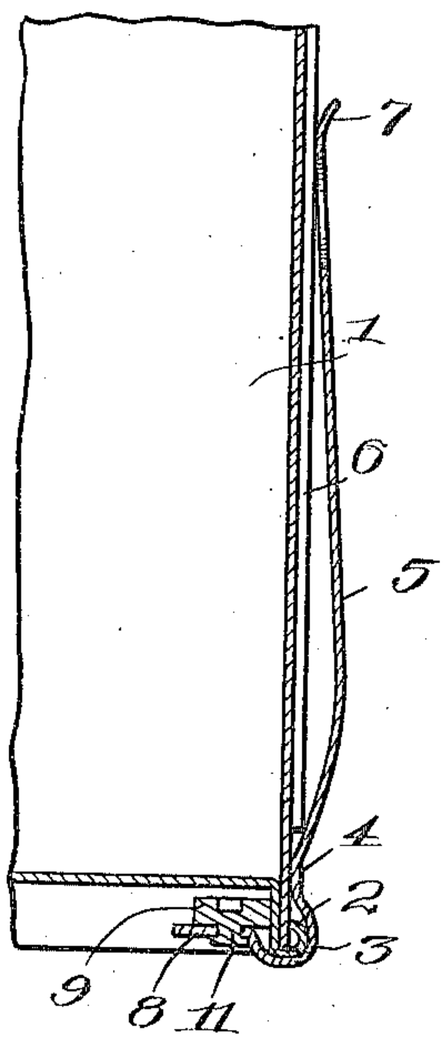

Fig. 3

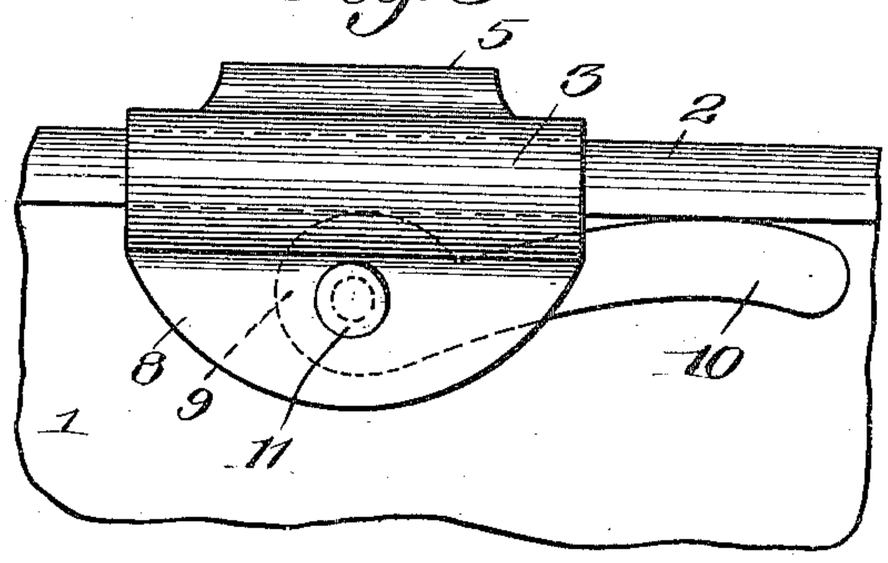

Fig. 4

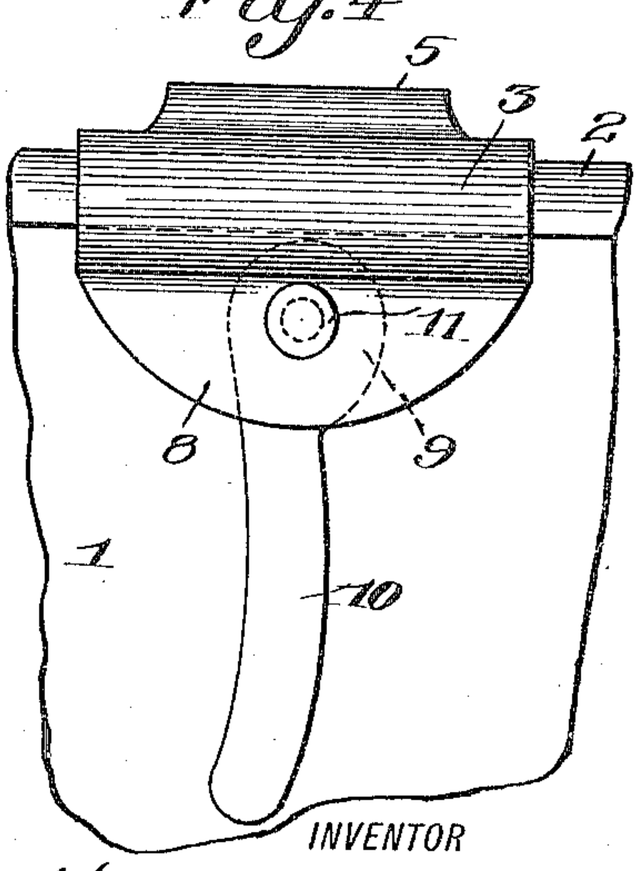

WITNESSES:

Ada M. Whitmore

Frances Jacobowitz

INVENTOR

Henry W. Mass

BY

H. W. Simmons

his ATTORNEY

COLUMBIA PLANOGRAPH CO., WASHINGTON, D. C.

UNITED STATES PATENT OFFICE.

HENRY W. MASS, OF ROCHESTER, NEW YORK, ASSIGNOR OF ONE-HALF TO JOHN A. RYAN, OF ROCHESTER, NEW YORK.

ARTICLE-HOLDING ATTACHMENT FOR RECEPTACLES.

1,161,237. Specification of Letters Patent. Patented Nov. 23, 1915.

Application filed February 10, 1915. Serial No. 7,372.

To all whom it may concern:

Be it known that I, HENRY W. MASS, of Rochester, in the county of Monroe and State of New York, have invented a new and useful Improvement in Article-Holding Attachments for Receptacles, which improvement is fully set forth in the following specification and shown in the accompanying drawings.

The present invention relates to an article holding attachment for receptacles and an object thereof is to provide a construction adapted for attachment to that type of receptacle having a flanged bottom as, for instance, a sheet metal box such as usually employed as a container for tobacco, the present construction being designed for holding cigarette papers to the box.

To this and other ends the invention consists in certain parts and combinations of parts all of which will be hereinafter described, the novel features being pointed out in the appended claims.

In the drawings: Figure 1 is a side view of the receptacle with the attachment in place thereon; Fig. 2 is an enlarged sectional view through the attachment and a portion of the box; Fig. 3 is an enlarged detail view of the attachment viewed from the under side of the box, the device being shown in clamped position; and Fig. 4 is a similar view showing the clamp moved to release the attachment.

Referring more particularly to the drawings, 1 indicates the receptacle having a surrounding depending flange 2 at the lower edge thereof, a bead being formed at the lower edge of the flange to project slightly beyond the side walls of the receptacle, this being the form of the ordinary tobacco container.

The attachment preferably embodies an upwardly opening loop 3 formed from sheet metal and having one arm thereof carrying a seat 4 to bear against the flange of the box above the lower beaded edge, the seat 4 being in one piece with the loop 3 and being formed by bending the stock inwardly above the loop. From this seat 4, a spring arm 5 extends, being preferably bent outwardly from the seat 4 and thence inwardly so as to provide a bowed construction, said arm being arranged to coöperate near its free end with the side wall of the receptacle 1 to hold the cigarette papers 6 between said arm and said side wall. The outer end of the arm may be deflected outwardly at 7 to facilitate the introduction of the papers. The other arm of the loop 3 carries a clamping device and to this end is preferably formed with a supporting portion 8 extending outwardly and horizontally with reference to the loop 3 at a point below the seat portion 4. On the upper surface of this supporting portion, the clamping member 9 may be arranged, said clamping member preferably being in the form of an eccentric having an arm 10 so that the eccentric may be moved to engage or disengage the inner face of the depending flange opposite the seat 4 to draw said seat firmly against the outer face of the flange. The post 11 of this eccentric may be in the form of a stud pressed up from the metal of the eccentric and passed through an opening in the supporting portion 8; the end of said pressed up portion being upset to hold it to the supporting portion. By this arrangement, the attachment may be applied to an ordinary tobacco box having a flanged bottom. To make such application, it is merely necessary to fit the loop 3 over the flange of the receptacle with the spring arm 5 coöperating with the side wall, after which the eccentric 9 is turned by means of the arm 10 to draw the seat 4 firmly against the flange 2 opposite the eccentric. The cigarette papers may then be introduced between the spring arm and the side wall of the container. As the attachment may be fitted to any number of receptacles, it is unnecessary to provide a paper holder for each receptacle.

The device may also be used for supporting the receptacles on show or display cards, the latter being slitted to permit the passage of the spring arm to engage the rear face of the card.

What I claim as my invention and desire to secure by Letters Patent is:

1. An article holding attachment for a receptacle having a flanged bottom comprising a loop adapted to receive the flange, a bowed spring arm carried by one arm of the loop and projecting in a direction substantially opposite that in which the loop projects so that the arm substantially alines with one arm of the loop to coöperate with a side wall of a receptacle in which the

flange is received within the loop, and a clamping device carried by the other arm of the loop.

2. An article holding attachment for receptacles comprising a loop, a seat connected to one arm of the loop, a bowed spring arm projecting from the seat in a direction substantially opposite that in which the loop projects, and a clamping device movably mounted on the other arm of the loop opposite the seat.

3. An article holding attachment for a receptacle comprising a loop formed by a bend in a sheet metal piece, a seat formed by an inward bend in the sheet metal piece at one end of one arm of this loop, a bowed spring arm formed of the sheet metal piece and projecting from the seat in a direction substantially opposite from that in which the loop projects, and a cam movably mounted on the other arm of the loop, opposite the seat portion.

4. An article holding attachment for a receptacle having a flanged bottom comprising a loop formed by a bend in a sheet metal piece, a spring arm formed in one piece with the loop, a seat portion formed by an inward bend in the sheet metal between one arm of the loop and the spring arm, a clamp support formed in one piece with the other arm of the loop and turned outwardly with reference to the loop below the seat portion, and an eccentric clamp arranged to turn on the outwardly turned clamp support about an axis substantially parallel with the axis of the arm by which the clamp support is carried.

5. An article holding attachment for a receptacle comprising the article holding means, a loop formed thereon and having one arm supporting the article holding means, a portion turned laterally on the other arm of the loop, and a cam member pivoted to the laterally-turned portion to turn about an axis substantially perpendicular to the laterally turned portion.

HENRY W. MASS.

Witnesses:
H. H. SIMMS,
ADA M. WHITMORE.

Copies of this patent may be obtained for five cents each, by addressing the "Commissioner of Patents, Washington, D. C."