US011507388B2

(12) **United States Patent**
Liu et al.

(10) **Patent No.: US 11,507,388 B2**
(45) **Date of Patent: Nov. 22, 2022**

(54) **STORAGE DEVICE ENUMERATION IN INFORMATION HANDLING SYSTEMS**

(71) Applicant: **Dell Products L.P.**, Round Rock, TX (US)

(72) Inventors: **Wei Liu**, Austin, TX (US); **Gobind Vijayakumar**, Bangalore (IN); **Krishnaprasad Koladi**, Karnataka (IN)

(73) Assignee: **Dell Products L.P.**, Round Rock, TX (US)

(*) Notice: Subject to any disclaimer, the term of this patent is extended or adjusted under 35 U.S.C. 154(b) by 111 days.

(21) Appl. No.: **16/868,193**

(22) Filed: **May 6, 2020**

(65) **Prior Publication Data**

US 2021/0349732 A1 Nov. 11, 2021

(51) **Int. Cl.**
G06F 9/4401 (2018.01)

(52) **U.S. Cl.**
CPC ***G06F 9/4408*** (2013.01)

(58) **Field of Classification Search**
CPC G06F 9/4408
See application file for complete search history.

(56) **References Cited**

U.S. PATENT DOCUMENTS

8,850,174 B1 * 9/2014 Mahmoud G06F 9/4416 713/2
2005/0038985 A1 * 2/2005 Taylor H04L 67/34 713/2
2015/0154032 A1 * 6/2015 Chen G06F 9/4408 713/2
2016/0299767 A1 * 10/2016 Mukadam G06F 3/067
2016/0350166 A1 * 12/2016 Andrews G06F 11/0787
2017/0147361 A1 * 5/2017 Kirvan G06F 9/44505

FOREIGN PATENT DOCUMENTS

CN 101499008 A * 8/2009
CN 108710508 A * 10/2018

* cited by examiner

Primary Examiner — Jaweed A Abbaszadeh
Assistant Examiner — Hyun Soo Kim
(74) *Attorney, Agent, or Firm* — McDermott Will & Emery LLP

(57) **ABSTRACT**

Methods, systems, and computer programs encoded on computer storage medium, for identifying storage devices of an IHS, wherein a BIOS of the IHS is associated with a first enumeration order of the storage devices; enumerating the storage devices such that a particular storage device of the storage devices is enumerated as the first enumerated storage device for both the BIOS and an OS of the IHS, including: determining that an OS installation mode is enabled, and in response, i) exposing only the particular storage device, and ii) disabling the remaining storage devices to; determining that a LUN is set by the BIOS as the first enumerated storage device, including setting an unique identifier (UID) for the particular storage device, and in response fetching data associated with the LUN based on the UID; parsing the LUN data; assigning, based on the parsing, the LUN as the first enumerated storage device.

20 Claims, 7 Drawing Sheets

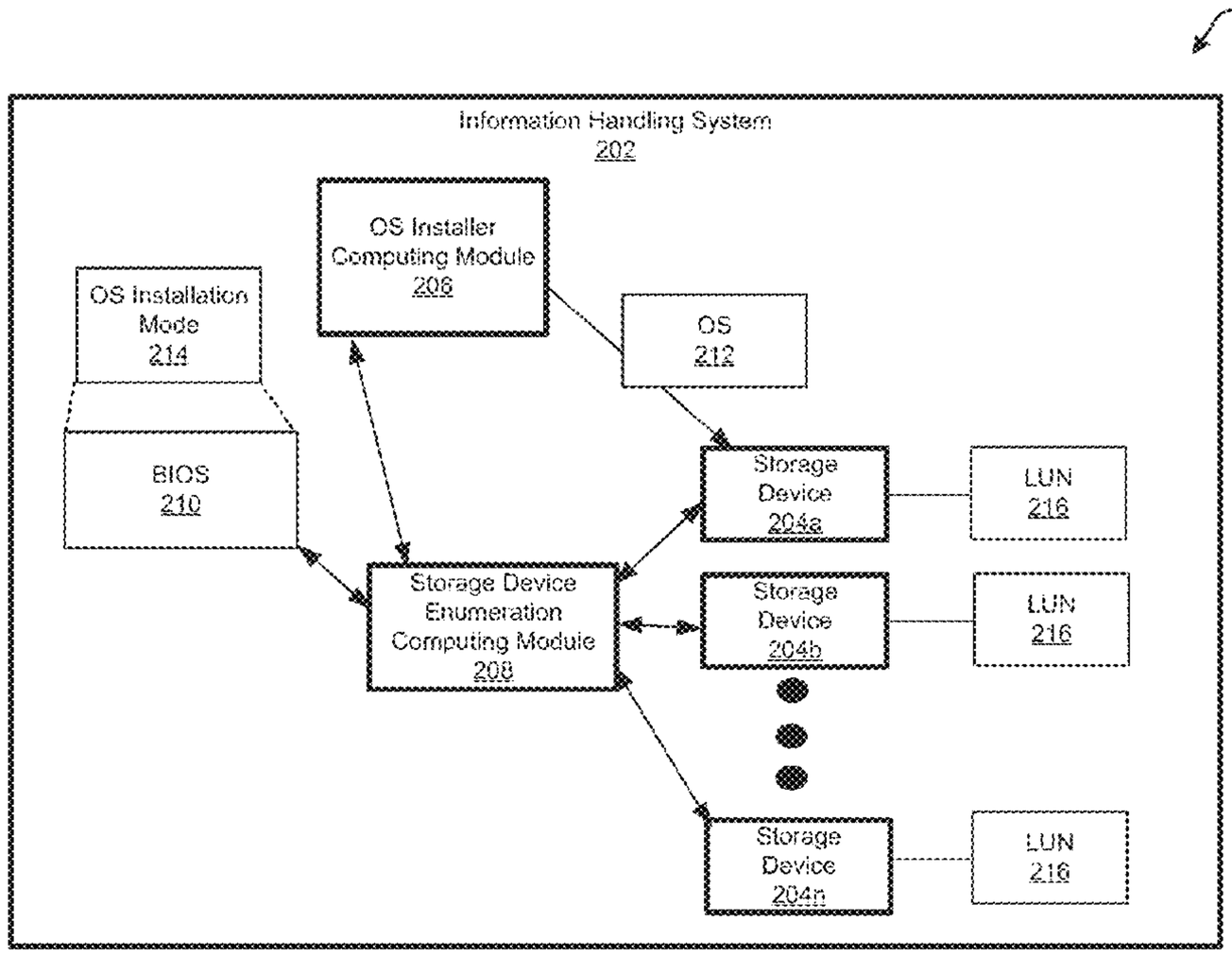

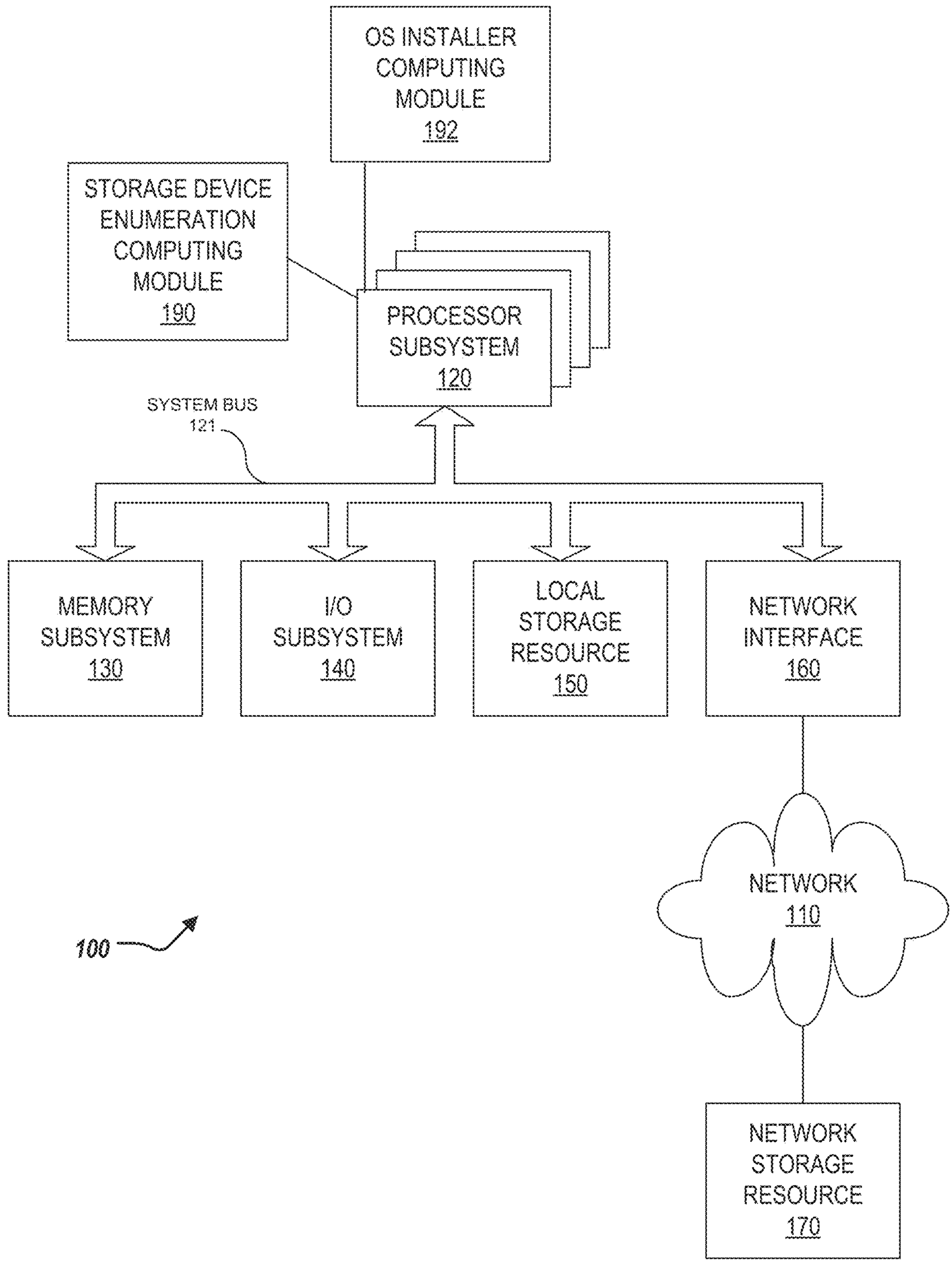
OS INSTALLER COMPUTING MODULE 192
STORAGE DEVICE ENUMERATION COMPUTING MODULE 190
PROCESSOR SUBSYSTEM 120
SYSTEM BUS 121
MEMORY SUBSYSTEM 130
I/O SUBSYSTEM 140
LOCAL STORAGE RESOURCE 150
NETWORK INTERFACE 160
NETWORK 110
NETWORK STORAGE RESOURCE 170
100

FIG. 1

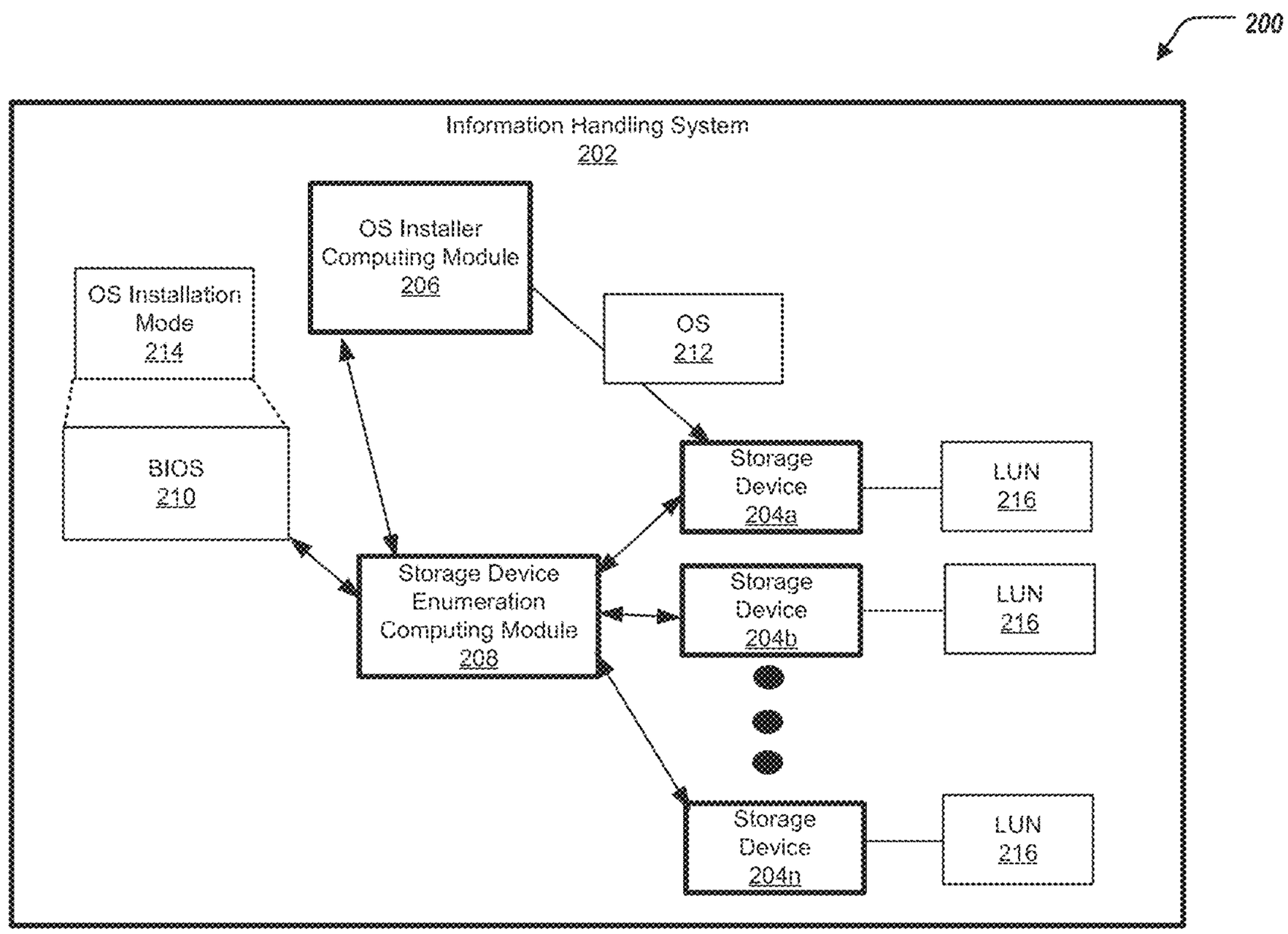
200
Information Handling System
202
OS Installer
Computing Module
206
OS Installation
Mode
214
OS
212
BIOS
210
Storage
Device
204a
LUN
216
Storage Device
Enumeration
Computing Module
208
Storage
Device
204b
LUN
216
Storage
Device
204n
LUN
216

FIG. 2

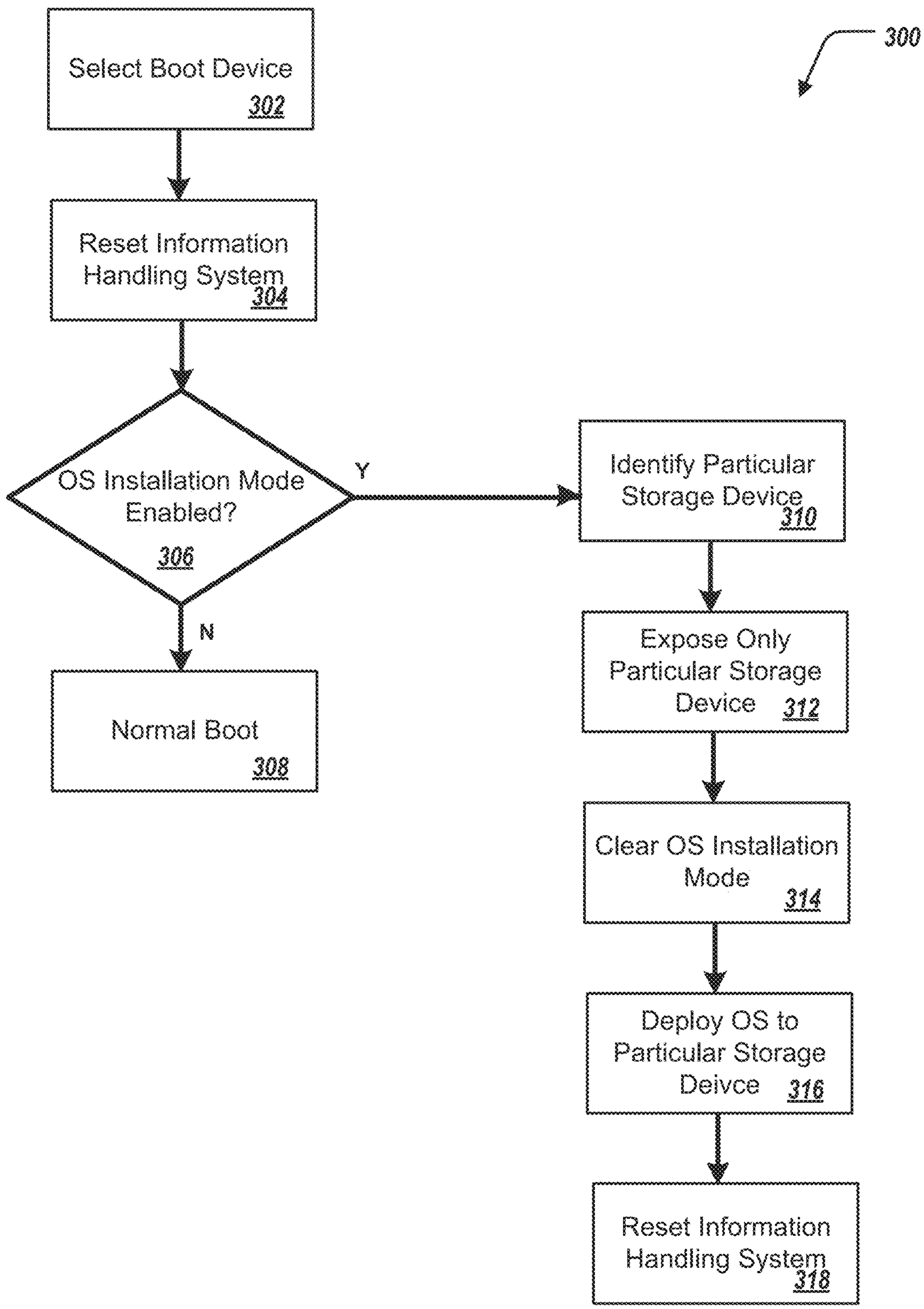
300
Select Boot Device
302
Reset Information Handling System
304
OS Installation Mode Enabled?
306
Y
N
Normal Boot
308
Identify Particular Storage Device
310
Expose Only Particular Storage Device
312
Clear OS Installation Mode
314
Deploy OS to Particular Storage Deivce
316
Reset Information Handling System
318

FIG. 3

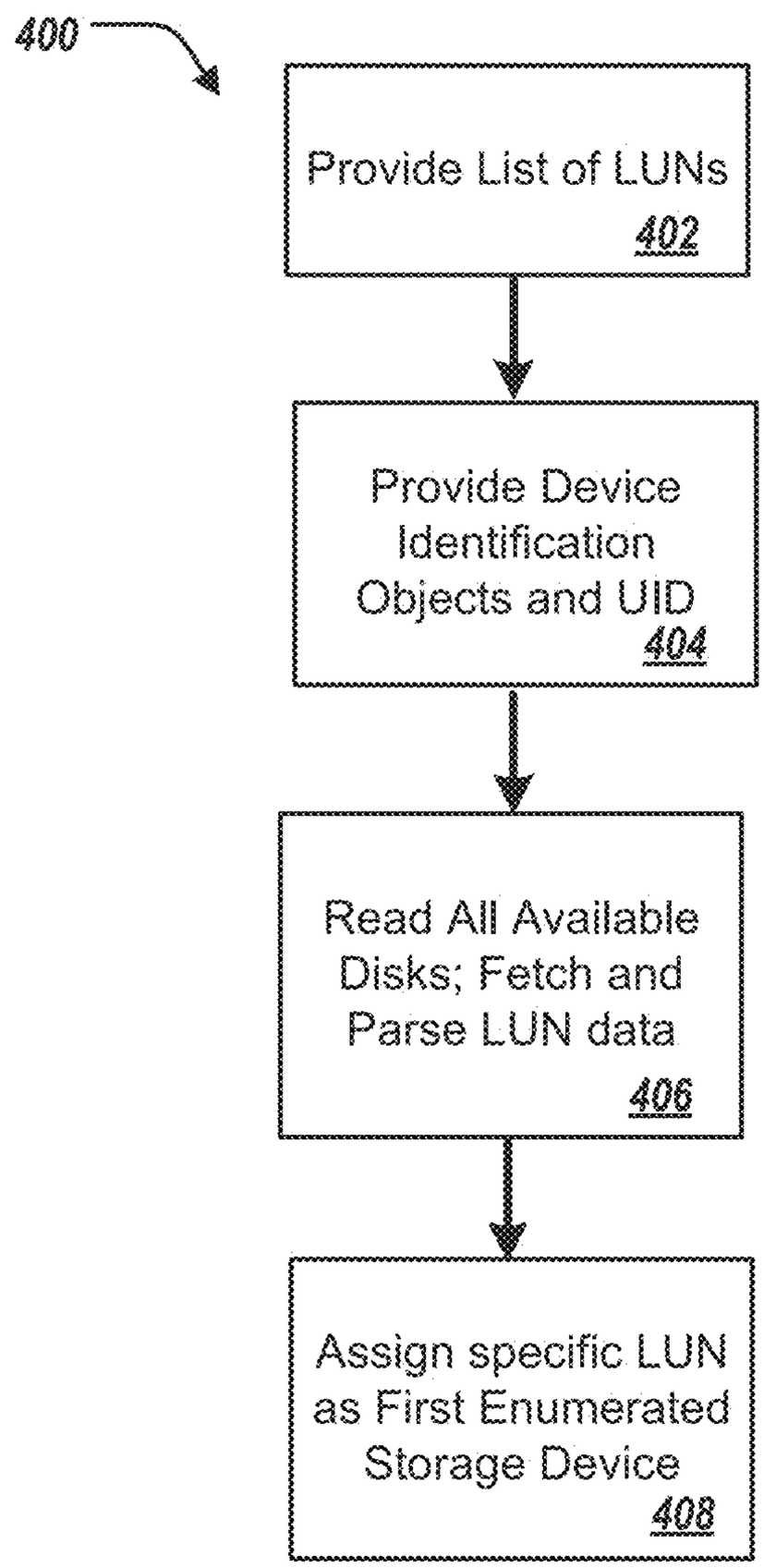
400
Provide List of LUNs
402
Provide Device Identification Objects and UID
404
Read All Available Disks; Fetch and Parse LUN data
406
Assign specific LUN as First Enumerated Storage Device
408

FIG. 4

500

502 504 506

Unique Label	PCI ID	CTL
BOSS	VID:DID	XX:1:0
PERC	VID:DID	YY:1:1

FIG. 5

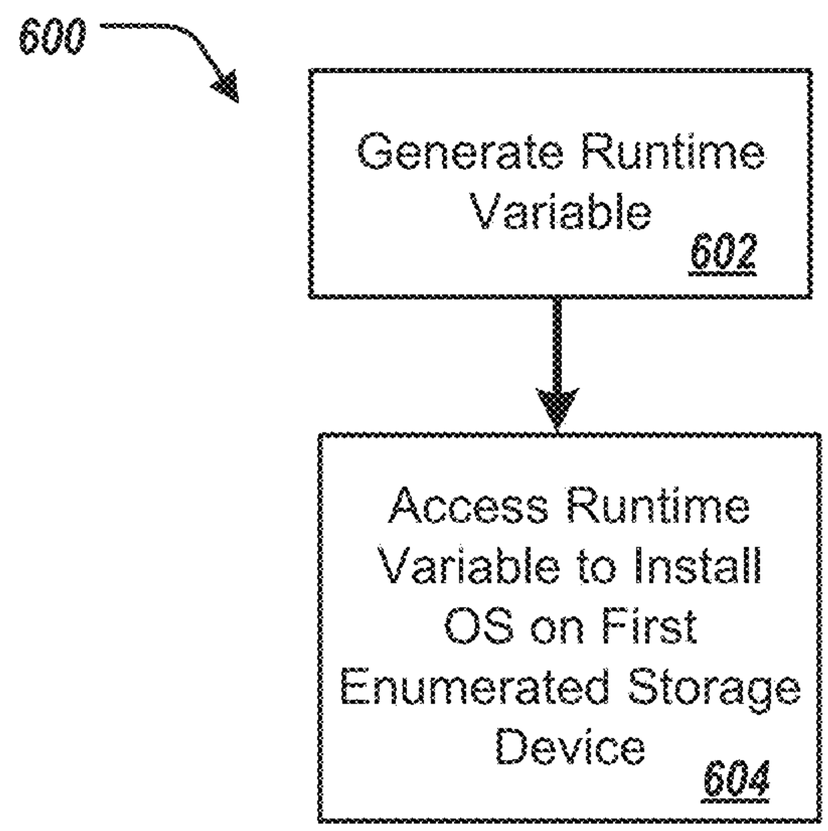
600
Generate Runtime Variable
602
Access Runtime Variable to Install OS on First Enumerated Storage Device
604

FIG. 6

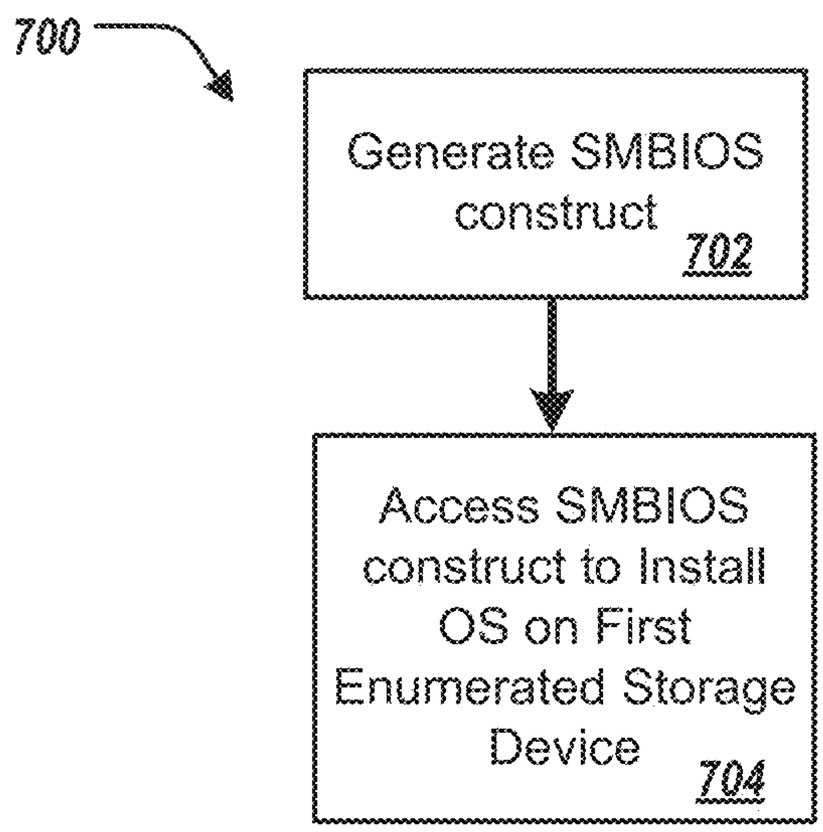
700
Generate SMBIOS construct
702
Access SMBIOS construct to Install OS on First Enumerated Storage Device
704

FIG. 7

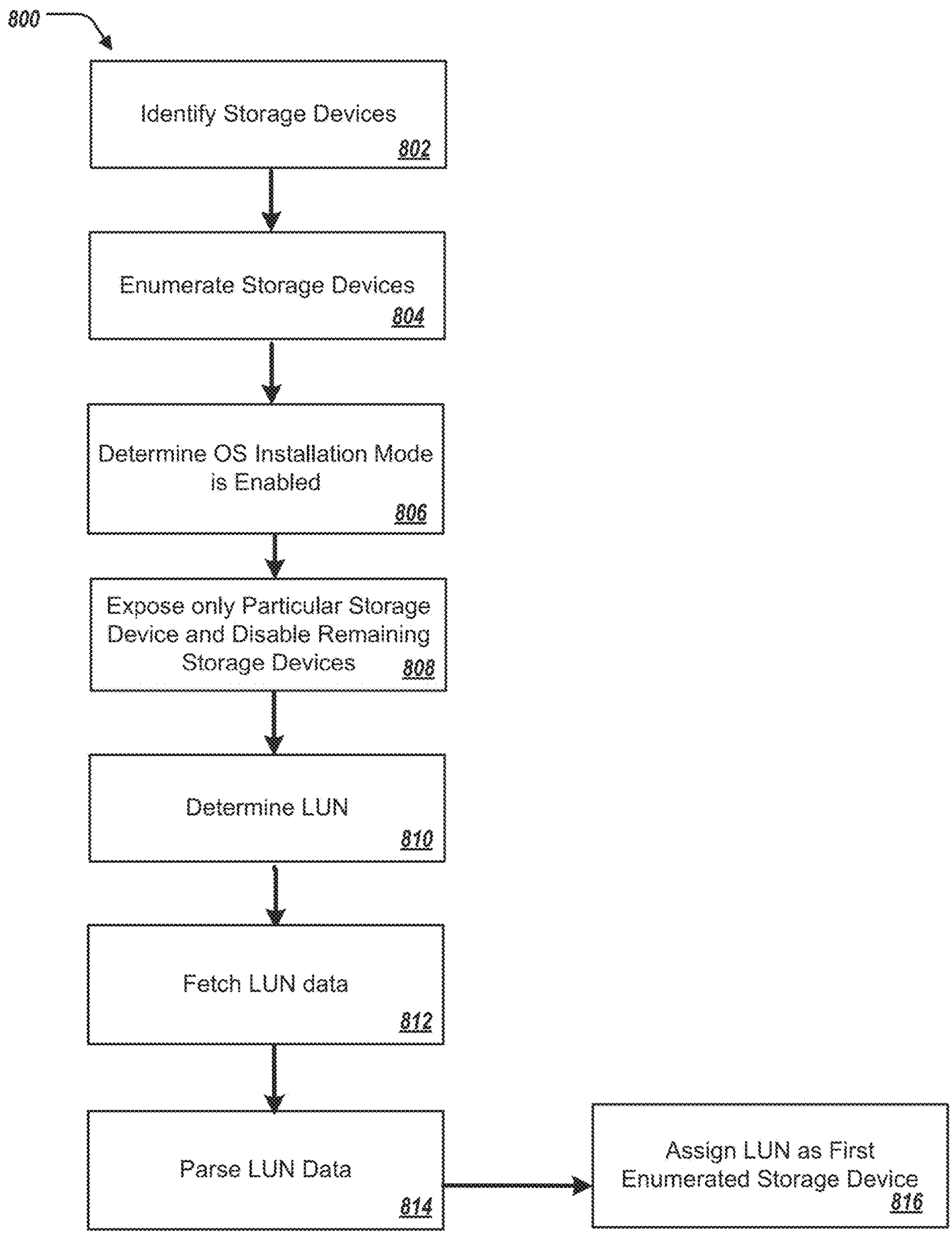
800
Identify Storage Devices
802
Enumerate Storage Devices
804
Determine OS Installation Mode is Enabled
806
Expose only Particular Storage Device and Disable Remaining Storage Devices
808
Determine LUN
810
Fetch LUN data
812
Parse LUN Data
814
Assign LUN as First Enumerated Storage Device
816

FIG. 8

STORAGE DEVICE ENUMERATION IN INFORMATION HANDLING SYSTEMS

BACKGROUND

Field of the Disclosure

The disclosure relates generally to an information handling system, and in particular, storage device enumeration in the information handling system.

Description of the Related Art

As the value and use of information continues to increase, individuals and businesses seek additional ways to process and store information. One option available to users is information handling systems. An information handling system generally processes, compiles, stores, and/or communicates information or data for business, personal, or other purposes thereby allowing users to take advantage of the value of the information. Because technology and information handling needs and requirements vary between different users or applications, information handling systems may also vary regarding what information is handled, how the information is handled, how much information is processed, stored, or communicated, and how quickly and efficiently the information may be processed, stored, or communicated. The variations in information handling systems allow for information handling systems to be general or configured for a specific user or specific use such as financial transaction processing, airline reservations, enterprise data storage, or global communications. In addition, information handling systems may include a variety of hardware and software components that may be configured to process, store, and communicate information and may include one or more computer systems, data storage systems, and networking systems.

Boot optimized devices, although set as the first boot device in the BIOS boot sequence, might not be enumerated as Disk0 in the operating system. As a result, the boot device is not always the default device to install the OS on during OS deployment. This can lead to confusion and potential user errors e.g., deleting the wrong disk contents. Moreover, customers may have scripts/utilities including hard coding of the boot disk as /dev/sda in Linux or Disk0 in Windows, that may be broken as well. This is a result of no direct relationship between the BIOS hard disk enumeration order, and the order in which the operation system numbers the disks (e.g., via Plug and Play (PnP)). The current OS device enumeration algorithms do not give a preference to boot optimized devices (or the storage device set as the first boot device in the boot sequence) explicitly.

SUMMARY

Innovative aspects of the subject matter described in this specification may be embodied in a method including identifying a plurality of storage devices of an information handling system, wherein a basic input/output system (BIOS) of the information handling system is associated with a first enumeration order of the storage devices; enumerating the storage devices such that a particular storage device of the plurality of the storage devices is enumerated as the first enumerated storage device for both the BIOS and an operation system (OS) of the information handling system, including: determining that an OS installation mode provided by the BIOS is enabled; in response to determining that the OS installation mode provided by the BIOS is enabled, i) exposing only the particular storage device to an OS installer computing module, and ii) disabling the remaining storage devices of the plurality of storage devices to the OS installer computing module; determining that a logical unit number (LUN) is set by the BIOS as the first enumerated storage device, including setting an unique identifier (UID) for the particular storage device; in response to determining that that the LUN is set by the BIOS as the first enumerated storage device: fetching, by an OS installer computing module, data associated with the LUN based on the UID; parsing, by the OS installer computing module, the LUN data; and assigning, by the OS installer computing module, based on the parsing, the LUN as the first enumerated storage device for the OS.

Other embodiments of these aspects include corresponding systems, apparatus, and computer programs, configured to perform the actions of the methods, encoded on computer storage devices.

These and other embodiments may each optionally include one or more of the following features. For instance, after exposing the particular storage device to the OS installer computing module, installing, by the OS installer computing module, the OS on the first enumerated storage device. After assigning the LUN as the first enumerated storage device for the OS, installing, by the OS installer computing module, the OS on the first enumerated storage device. The particular storage device is a boot optimized server storage device. After rebooting the information handling system, restoring the remaining storage devices of the plurality of storage devices to the OS installer computing module. After rebooting the information handling system, disabling the OS installation mode provided by the BIOS. Generating, by the BIOS, a runtime variable including the LUN data and the UID; and accessing, by the OS installer computing module, the runtime variable to install the OS on the first enumerated storage device. After determining that the OS installation mode provided by the BIOS is enabled, resetting the information handling system. Generating, by the BIOS, a system management BIOS (SMBIOS) construct including the LUN data and the UID; and Accessing, by the OS installer computing module, the SMBIOS construct to install the OS on the first enumerated storage device.

The details of one or more embodiments of the subject matter described in this specification are set forth in the accompanying drawings and the description below. Other potential features, aspects, and advantages of the subject matter will become apparent from the description, the drawings, and the claims.

BRIEF DESCRIPTION OF DRAWINGS

FIG. **1** is a block diagram of selected elements of an embodiment of an information handling system.

FIG. **2** illustrates a block diagram of the information handling system for storage device enumeration.

FIGS. **3**, **4**, **6**, **7**, and **8** illustrate respective methods for storage device enumeration in the information handling system.

FIG. **5** illustrates a table for storage device enumeration in the information handling system.

DESCRIPTION OF PARTICULAR EMBODIMENT(S)

In the following description, details are set forth by way of example to facilitate discussion of the disclosed subject

matter. It should be apparent to a person of ordinary skill in the field, however, that the disclosed embodiments are exemplary and not exhaustive of all possible embodiments.

For the purposes of this disclosure, an information handling system may include an instrumentality or aggregate of instrumentalities operable to compute, classify, process, transmit, receive, retrieve, originate, switch, store, display, manifest, detect, record, reproduce, handle, or utilize various forms of information, intelligence, or data for business, scientific, control, entertainment, or other purposes. For example, an information handling system may be a personal computer, a PDA, a consumer electronic device, a network storage device, or another suitable device and may vary in size, shape, performance, functionality, and price. The information handling system may include memory, one or more processing resources such as a central processing unit (CPU) or hardware or software control logic. Additional components of the information handling system may include one or more storage devices, one or more communications ports for communicating with external devices as well as various input and output (I/O) devices, such as a keyboard, a mouse, and a video display. The information handling system may also include one or more buses operable to transmit communication between the various hardware components.

For the purposes of this disclosure, computer-readable media may include an instrumentality or aggregation of instrumentalities that may retain data and/or instructions for a period of time. Computer-readable media may include, without limitation, storage media such as a direct access storage device (e.g., a hard disk drive or floppy disk), a sequential access storage device (e.g., a tape disk drive), compact disk, CD-ROM, DVD, random access memory (RAM), read-only memory (ROM), electrically erasable programmable read-only memory (EEPROM), and/or flash memory (SSD); as well as communications media such wires, optical fibers, microwaves, radio waves, and other electromagnetic and/or optical carriers; and/or any combination of the foregoing.

Particular embodiments are best understood by reference to FIGS. **1-8** wherein like numbers are used to indicate like and corresponding parts.

Turning now to the drawings, FIG. **1** illustrates a block diagram depicting selected elements of an information handling system **100** in accordance with some embodiments of the present disclosure. In various embodiments, information handling system **100** may represent different types of portable information handling systems, such as, display devices, head mounted displays, head mount display systems, smart phones, tablet computers, notebook computers, media players, digital cameras, 2-in-1 tablet-laptop combination computers, and wireless organizers, or other types of portable information handling systems. In one or more embodiments, information handling system **100** may also represent other types of information handling systems, including desktop computers, server systems, controllers, and microcontroller units, among other types of information handling systems. Components of information handling system **100** may include, but are not limited to, a processor subsystem **120**, which may comprise one or more processors, and system bus **121** that communicatively couples various system components to processor subsystem **120** including, for example, a memory subsystem **130**, an I/O subsystem **140**, a local storage resource **150**, and a network interface **160**. System bus **121** may represent a variety of suitable types of bus structures, e.g., a memory bus, a peripheral bus, or a local bus using various bus architectures in selected embodiments. For example, such architectures may include, but are not limited to, Micro Channel Architecture (MCA) bus, Industry Standard Architecture (ISA) bus, Enhanced ISA (EISA) bus, Peripheral Component Interconnect (PCI) bus, PCI-Express bus, HyperTransport (HT) bus, and Video Electronics Standards Association (VESA) local bus.

As depicted in FIG. **1**, processor subsystem **120** may comprise a system, device, or apparatus operable to interpret and/or execute program instructions and/or process data, and may include a microprocessor, microcontroller, digital signal processor (DSP), application specific integrated circuit (ASIC), or another digital or analog circuitry configured to interpret and/or execute program instructions and/or process data. In some embodiments, processor subsystem **120** may interpret and/or execute program instructions and/or process data stored locally (e.g., in memory subsystem **130** and/or another component of information handling system). In the same or alternative embodiments, processor subsystem **120** may interpret and/or execute program instructions and/or process data stored remotely (e.g., in network storage resource **170**).

Also in FIG. **1**, memory subsystem **130** may comprise a system, device, or apparatus operable to retain and/or retrieve program instructions and/or data for a period of time (e.g., computer-readable media). Memory subsystem **130** may comprise random access memory (RAM), electrically erasable programmable read-only memory (EEPROM), a PCMCIA card, flash memory, magnetic storage, opto-magnetic storage, and/or a suitable selection and/or array of volatile or non-volatile memory that retains data after power to its associated information handling system, such as system **100**, is powered down.

In information handling system **100**, I/O subsystem **140** may comprise a system, device, or apparatus generally operable to receive and/or transmit data to/from/within information handling system **100**. I/O subsystem **140** may represent, for example, a variety of communication interfaces, graphics interfaces, video interfaces, user input interfaces, and/or peripheral interfaces. In various embodiments, I/O subsystem **140** may be used to support various peripheral devices, such as a touch panel, a display adapter, a keyboard, an accelerometer, a touch pad, a gyroscope, an IR sensor, a microphone, a sensor, or a camera, or another type of peripheral device.

Local storage resource **150** may comprise computer-readable media (e.g., hard disk drive, floppy disk drive, CD-ROM, and/or other type of rotating storage media, flash memory, EEPROM, and/or another type of solid state storage media) and may be generally operable to store instructions and/or data. Likewise, the network storage resource may comprise computer-readable media (e.g., hard disk drive, floppy disk drive, CD-ROM, and/or other type of rotating storage media, flash memory, EEPROM, and/or other type of solid state storage media) and may be generally operable to store instructions and/or data.

In FIG. **1**, network interface **160** may be a suitable system, apparatus, or device operable to serve as an interface between information handling system **100** and a network **110**. Network interface **160** may enable information handling system **100** to communicate over network **110** using a suitable transmission protocol and/or standard, including, but not limited to, transmission protocols and/or standards enumerated below with respect to the discussion of network **110**. In some embodiments, network interface **160** may be communicatively coupled via network **110** to a network storage resource **170**. Network **110** may be a public network or a private (e.g. corporate) network. The network may be

implemented as, or may be a part of, a storage area network (SAN), personal area network (PAN), local area network (LAN), a metropolitan area network (MAN), a wide area network (WAN), a wireless local area network (WLAN), a virtual private network (VPN), an intranet, the Internet or another appropriate architecture or system that facilitates the communication of signals, data and/or messages (generally referred to as data). Network interface **160** may enable wired and/or wireless communications (e.g., NFC or Bluetooth) to and/or from information handling system **100**.

In particular embodiments, network **110** may include one or more routers for routing data between client information handling systems **100** and server information handling systems **100**. A device (e.g., a client information handling system **100** or a server information handling system **100**) on network **110** may be addressed by a corresponding network address including, for example, an Internet protocol (IP) address, an Internet name, a Windows Internet name service (WINS) name, a domain name or other system name. In particular embodiments, network **110** may include one or more logical groupings of network devices such as, for example, one or more sites (e.g. customer sites) or subnets. As an example, a corporate network may include potentially thousands of offices or branches, each with its own subnet (or multiple subnets) having many devices. One or more client information handling systems **100** may communicate with one or more server information handling systems **100** via any suitable connection including, for example, a modem connection, a LAN connection including the Ethernet or a broadband WAN connection including DSL, Cable, Ti, T3, Fiber Optics, Wi-Fi, or a mobile network connection including GSM, GPRS, 3G, or WiMax.

Network **110** may transmit data using a desired storage and/or communication protocol, including, but not limited to, Fibre Channel, Frame Relay, Asynchronous Transfer Mode (ATM), Internet protocol (IP), other packet-based protocol, small computer system interface (SCSI), Internet SCSI (iSCSI), Serial Attached SCSI (SAS) or another transport that operates with the SCSI protocol, advanced technology attachment (ATA), serial ATA (SATA), advanced technology attachment packet interface (ATAPI), serial storage architecture (SSA), integrated drive electronics (IDE), and/or any combination thereof. Network **110** and its various components may be implemented using hardware, software, or any combination thereof.

The information handling system **100** can include a storage device enumeration computing module **190** and an OS installer computer module **192**. For example, the storage device enumeration computing module **190** and the OS installer computing module **192** can be included by the processor subsystem **120**, and/or in communication with the processor subsystem **120**. The storage device enumeration computing module **190** and the OS installer computing module **192** are described further herein.

Turning to FIG. **2**, FIG. **2** illustrates a computing environment **200** including an information handling system **202**. The information handling system **202** can include storage devices **204***a*, **204***b*, . . . , **204***n* (collectively referred to as storage devices **204**); an operating system (OS) installer computing module **206**; a storage device enumeration computing module **208**; a basic input/output system (BIOS) computing module **210**; and an operating system (OS) module **212**. The storage device enumeration computing module **208** can be in communication with the BIOS **210**, the OS installer computing module **206**, and the storage devices **204**. The OS installer computing module **206** can be in communication with the storage devices **204**. The information handling system **202** can be similar to the information handling system **100** of FIG. **1**. The storage device enumeration computing module **208** can be similar to the storage device enumeration computing module **190** of FIG. **1**; and the OS installer computing module **206** can be similar to the OS installer computing module **192** of FIG. **1**.

In some examples, the BIOS **210** can be associated with a first enumeration order of the storage devices **204**; and the OS **212** can be associated with a second enumeration order of the storage devices **204**. In some examples, the first enumeration order and the second enumeration order are different. In some examples, the first enumeration order and the second enumeration order are the same.

To that end, the storage device enumeration computing module **208** can enumerate the storage devices **204**. Specifically, the storage device enumeration computing module **208** enumerates the storage devices **204** such that the storage device **204***a* of the storage devices **204** is enumerated as the first enumerated storage device for both the BIOS module **210** and the OS module **212**, described further herein. In some examples, the storage device **204***a* is a boot optimized server storage (BOSS) device.

In some examples, in short, the storage device enumeration computing module **208** can disable (or hide) each of the remaining storage devices **204***b*, . . . , **204***n* (other than the storage device **204***a*) from the OS installer computing module **206**. Thus, only changes are needed to the BIOS **210**, making such enumeration of the storage device **204** independent of the OS **212**—only the storage device **204***a* is presented to the OS installer computing module **206**, e.g., the BOSS device.

The storage device enumeration computing module **208** can determine that an OS installation mode **214** provided by the BIOS **210** is enabled. The BIOS **210** can provide a set up option for the OS installation mode **214** for the storage device **204***a* (e.g., the BOSS device) to a user of the information handling system **202**. The user can provide user input selecting/enabling the OS installation mode **214** for the storage device **204***a*. In some examples, the information handling system **202** can provide an intelligent platform management interface (IPMI) command (such as part of an IPMI boot option command) to enable the OS installation mode **214** (e.g., remotely enable the OS installation mode **214**).

In some examples, after determining that the OS installation mode **214** provided by the BIOS **210** is enabled, the storage device enumeration computing module **208** can reset the information handling system **202**. That is, the storage device enumeration computing module **208** can reset, or power off/on (power cycle), the information handling system **202**.

In some implementations, the storage device enumeration computing module **208**, in response to determining that the OS installation mode **214** is enabled, exposes only the storage device **204***a* to the OS installer computing module **206**. For example, the storage device enumeration computing module **208**, in response to determining that the OS installation module **214** is enabled, exposes only the BOSS device to the OS installer computing module **206**. Furthermore, the storage device enumeration computing module **208**, in response to determining that the OS installation module **214** is enabled, also disables the remaining storage devices **204***b*, . . . , **204***n* to the OS installer computing module **206**. For example, the storage device enumeration computing module **208** disables (or hides) all of the remaining storage devices **204** from the OS installer computing module **206**, including redundant array of inexpensive disks

(RAID) controllers and/or host bus adapter (HBA) of the information handling system **202**. As a result, the storage device **204***a* can be enumerated as the first enumerated storage device.

In some examples, after exposing only the storage device **204***a* (e.g. the BOSS device) to the OS installer computing module **206**, the OS installer computing module **206** installs the OS **212** on the storage device **204***a* (the first enumerated storage device). That is, the OS installer computing module **206** makes the OS ready for execution by the information handling system **202** by installing the OS **212** on the storage device **204***a*.

In some examples, the information handling system **202** can be rebooted (power cycled). After the information handling system **202** is rebooted, the remaining storage devices **204** can be restored to the OS installer computing module **206**. That is, the remaining storage devices **204** can be re-enabled to their original state, and detectable by the OS installer computing module **206**.

In some examples, after the information handling system **202** is rebooted, the OS installation mode **214** is disabled. That is, the OS installation module **214** can be automatically disabled upon rebooting (power cycle) of the information handling system **202**.

In some implementations, the storage device enumeration computing module **208** can adjust the BIOS **210** and the OS **212** to facilitate enumeration of the storage devices **204**. In short, the storage device enumeration computing module **208** can notify the OS installer computing module **206** of the storage device **204***a* for enumeration as the first enumerated storage device.

Specifically, the storage device enumeration computing module **208** can determine that a logical unit number (LUN) **216** is set by the BIOS **210** as the first enumerated storage device. The LUN **216** can identify a specific storage device **204**, a RAID set of the storage devices **204**, or a partition of a storage device **204**. The BIOS **210** can provide an option to the user of the information handling system **202** to set the LUN **216** which the OS **212** sets as the first enumerated storage device. In some examples, when specifying the LUN **216**, an unique identifier (UID) is set for the first enumerated storage device. For example, the UID is set for the BOSS device, with the details/data associated with the LUN **216** attached to the UID. For example, an example format for the logical device UID can be '<Unique Label>::PCI ID of the device:: <device>:Controller:Target:LUN'.

The storage device enumeration computing module **208**, in response to determining that the LUN **216** is set by the BIOS **210** as the first enumerated storage device, can take the following actions. Specifically, the BIOS **210** can provide the first enumerated storage device and the data associated with the LUN **216** to the OS installer computing module **206**. For example, using an advanced configuration and power interface (ACPI), the BIOS **210** provides device identification objects, including the UID, to the OS installer computing module **206**. The OS installer computing module **206** can fetch the data associated with the LUN **216** based on the UID. Specifically, the OS installer computing module **206**, after reading all the available storage device **204**, reads the UID for the storage device **204***a* (e.g., the BOSS device), reads the UID unique label, and fetches the peripheral component interconnect (PCI) identifier (ID) and LUN data. The OS installer computing module **206** parses the LUN data. Specifically, the OS installer computing module **206** parses the LUN data using the Controller:Target:LUN data provided via the ACPI. The OS installer computing module **206** assigns, based on the parsing, the LUN **216** as the first enumerated storage device for the OS **212**. That is, the OS installer computing module **206** assigns the specific LUN **216** as the first enumerated storage device (e.g., /dev/sda for SCSI devices in Linux). In some examples, after assigning the LUN **216** as the first enumerated storage device for the OS **212**, the OS installer computing module **206** installs the OS **212** on the first enumerated storage device (the LUN **216**). That is, the OS installer computing module **206** makes the OS ready for execution by the information handling system **202** by installing the OS **212** on the first enumerated storage device (the LUN **216**).

FIG. **5** illustrates an example table **500** for the UID for each of the storage devices **204**. The table **500** can include, for each storage device **204**, the UID **502**, the PCI ID **504**, and C:T:L **506**.

In some examples, the BIOS **210** can generate a runtime variable including the LUN data and the UID. For example, the runtime variable can be an unified extensible firmware interface (UEFI) variable that is provided by the BIOS **210**. The OS installer computing module **206** can access the runtime variable to install the OS **212** on the first enumerated storage device. For example, the OS installer computing module **214** can access the UEFI runtime variable during installation of the OS **212** on the first enumerated storage device, or after installation of the OS **212** on the first enumerated storage device. For example, a Linux OS can obtain the UEFI variable via sysfs.

In some examples, the BIOS can generate a system management BIOS (SMBIOS) construct including the LUN data and the UID. The OS installer computing module **206** can access the SMBIOS construct to install the OS **212** on the first enumerated storage device.

FIG. **3** illustrates a flowchart depicting selected elements of an embodiment of a method **300** for storage device enumeration in the information handling system **202**. The method **300** may be performed by the information handling system **100**, the computing environment **200**, the information handling system **202**, the OS installer computing module **206**, and/or the storage device enumeration computing module **208** with reference to FIGS. **1**, **2**, and **5**. It is noted that certain operations described in method **300** may be optional or may be rearranged in different embodiments.

A user selects the storage device **204***a* (the boot device, or BOSS device) via the OS installation mode **214** of the BIOS **210** (**302**). The information handling system **202** resets (**304**). The storage device enumeration computing module **208** determines whether the OS installation mode **214** is enabled (**306**). When the storage device enumeration computing module **208** determines that the OS installation mode **214** is not enabled, the information handling system **202** performs a normal boot (**308**). When the storage device enumeration computing module **208** determines that the OS installation mode **214** is enabled, the storage device enumeration computing module **208** identifies which storage device **204** is selected as the first enumerated storage device (**310**). The storage device enumeration computing module **208** exposes only the storage device **204***a* to the OS installer computing module **206**, and disables the remaining storage devices **204** to the OS installer computing module **206** (**312**). The storage device enumeration computing module **208** clears the OS installation mode **214** (**314**). The OS installer computing module **206** detects the first enumerated storage device **204** and deploys the OS **212** to the first enumerated storage device **204** (**316**). The information handling system **202** is reset (**318**).

FIG. **4** illustrates a flowchart depicting selected elements of an embodiment of a method **400** for storage device

enumeration in the information handling system **202**. The method **400** may be performed by the information handling system **100**, the computing environment **200**, the information handling system **202**, the OS installer computing module **206**, and/or the storage device enumeration computing module **208** with reference to FIGS. **1**, **2**, and **5**. It is noted that certain operations described in method **400** may be optional or may be rearranged in different embodiments.

The BIOS **210** provides a list of LUNs present in the information handling system **202** (**402**). The BIOS **210**, using ACPI, provides device identification objects, including the UID, to the OS installer computing module **206** (**404**). The OS installer computing module **206** reads all available storage devices **204**, fetches and parses the LUN data associated with the UID (**406**). The OS installer computing module **206** assigns the specific LUN associated with the UID as the first enumerated storage device (e.g., as Disk 0/sda) (**408**).

FIG. **6** illustrates a flowchart depicting selected elements of an embodiment of a method **600** for storage device enumeration in the information handling system **202**. The method **600** may be performed by the information handling system **100**, the computing environment **200**, the information handling system **202**, the OS installer computing module **206**, and/or the storage device enumeration computing module **208** with reference to FIGS. **1**, **2**, and **5**. It is noted that certain operations described in method **600** may be optional or may be rearranged in different embodiments.

The BIOS **210** can generate a runtime variable including the LUN data and the UID (**602**). The OS installer computing module **206** can access the runtime variable to install the OS **212** on the first enumerated storage device **204** (**604**).

FIG. **7** illustrates a flowchart depicting selected elements of an embodiment of a method **700** for storage device enumeration in the information handling system **202**. The method **600** may be performed by the information handling system **100**, the computing environment **200**, the information handling system **202**, the OS installer computing module **206**, and/or the storage device enumeration computing module **208** with reference to FIGS. **1**, **2**, and **5**. It is noted that certain operations described in method **700** may be optional or may be rearranged in different embodiments.

The BIOS can generate a system management BIOS (SMBIOS) construct including the LUN data and the UID (**702**). The OS installer computing module **206** can access the SMBIOS construct to install the OS **212** on the first enumerated storage device **204** (**704**).

FIG. **8** illustrates a flowchart depicting selected elements of an embodiment of a method **800** for storage device enumeration in the information handling system **202**. The method **800** may be performed by the information handling system **100**, the computing environment **200**, the information handling system **202**, the OS installer computing module **206**, and/or the storage device enumeration computing module **208** with reference to FIGS. **1**, **2**, and **5**. It is noted that certain operations described in method **800** may be optional or may be rearranged in different embodiments.

The storage device enumeration computing module **208** identifies the plurality of storage devices **204** of the information handling system **202** (**802**). In some examples, the BIOS **210** of the information handling system **202** is associated with a first enumeration order of the storage devices **204**. The storage device enumeration computing module **208** enumerates the storage devices **204** such that a storage device **204***a* of the plurality of the storage devices **204** is enumerated as the first enumerated storage device for both the BIOS **210** and an operation system (OS) **212** of the information handling system **202** (**804**). The storage device enumeration computing module **208** determines that that an OS installation mode **214** provided by the BIOS **210** is enabled (**806**). The storage device enumeration computing module **208**, in response to determining that the OS installation mode **214** provided by the BIOS **210** is enabled, i) exposes only the storage device **204***a* to an OS installer computing module **206**, and ii) disables the remaining storage devices **204** to the OS installer computing module **206** (**808**). The storage device enumeration computing module **208** determines that a logical unit number (LUN) **216** is set by the BIOS **210** as the first enumerated storage device (**810**). In some examples, the storage device enumeration computing module **208** sets an unique identifier (UID) for the storage device **204***a*. In response to determining that that the logical unit number (LUN) **216** is set by the BIOS **210** as the first enumerated storage device **204**, the OS installer computing module **206** fetches data associated with the LUN **216** based on the UID (**812**). Further, the OS installer computing module **206** parses the LUN data (**814**). Further, the OS installer computing module **206** assigns, based on the parsing, the LUN **216** as the first enumerated storage device for the OS **212** (**816**). The OS installer computing module **206** installs the OS **212** on the first enumerated storage device **204***a*.

The above disclosed subject matter is to be considered illustrative, and not restrictive, and the appended claims are intended to cover all such modifications, enhancements, and other embodiments which fall within the true spirit and scope of the present disclosure. Thus, to the maximum extent allowed by law, the scope of the present disclosure is to be determined by the broadest permissible interpretation of the following claims and their equivalents, and shall not be restricted or limited by the foregoing detailed description.

Herein, "or" is inclusive and not exclusive, unless expressly indicated otherwise or indicated otherwise by context. Therefore, herein, "A or B" means "A, B, or both," unless expressly indicated otherwise or indicated otherwise by context. Moreover, "and" is both joint and several, unless expressly indicated otherwise or indicated otherwise by context. Therefore, herein, "A and B" means "A and B, jointly or severally," unless expressly indicated otherwise or indicated other-wise by context.

The scope of this disclosure encompasses all changes, substitutions, variations, alterations, and modifications to the example embodiments described or illustrated herein that a person having ordinary skill in the art would comprehend. The scope of this disclosure is not limited to the example embodiments described or illustrated herein. Moreover, although this disclosure describes and illustrates respective embodiments herein as including particular components, elements, features, functions, operations, or steps, any of these embodiments may include any combination or permutation of any of the components, elements, features, functions, operations, or steps described or illustrated anywhere herein that a person having ordinary skill in the art would comprehend. Furthermore, reference in the appended claims to an apparatus or system or a component of an apparatus or system being adapted to, arranged to, capable of, configured to, enabled to, operable to, or operative to perform a particular function encompasses that apparatus, system, component, whether or not it or that particular function is activated, turned on, or unlocked, as long as that apparatus, system, or component is so adapted, arranged, capable, configured, enabled, operable, or operative.

What is claimed is:

1. A computer-implemented method, including:

identifying a plurality of storage devices of an information handling system, wherein a basic input/output system (BIOS) of the information handling system is associated with a first enumeration order of the storage devices, and an operating system (OS) of the information handling system is associated with a second enumeration order of the storage devices, wherein the first enumeration order and the second enumeration order are different;

enumerating the storage devices such that a particular storage device of the plurality of the storage devices is enumerated as the first enumerated storage device for both the BIOS and the OS of the information handling system based on the first enumeration order of the BIOS, wherein the first enumerated storage device is a partition of the particular storage device and identified as disk0, including:

determining that an OS installation mode provided by the BIOS is enabled;

in response to determining that the OS installation mode provided by the BIOS is enabled, i) exposing only the particular storage device, that is the first enumerated storage device based on the first enumeration order of the BIOS, to an OS installer computing module, and ii) disabling the remaining storage devices of the plurality of storage devices to the OS installer computing module;

determining that a logical unit number (LUN) is set by the BIOS as the first enumerated storage device, including setting a unique identifier (UID) for the particular storage device;

in response to determining that the LUN is set by the BIOS as the first enumerated storage device:

fetching, by an OS installer computing module, data associated with the LUN based on the UID;

parsing, by the OS installer computing module, the LUN data; and

assigning, by the OS installer computing module, based on the parsing, the LUN as the first enumerated storage device for the OS.

2. The computer-implemented method of claim 1, further comprising after exposing the particular storage device to the OS installer computing module, installing, by the OS installer computing module, the OS on the first enumerated storage device.

3. The computer-implemented method of claim 1, further comprising after assigning the LUN as the first enumerated storage device for the OS, installing, by the OS installer computing module, the OS on the first enumerated storage device.

4. The computer-implemented method of claim 1, wherein the particular storage device is a boot optimized server storage device.

5. The computer-implemented method of claim 1, after rebooting the information handling system, restoring the remaining storage devices of the plurality of storage devices to the OS installer computing module.

6. The computer-implemented method of claim 1, after rebooting the information handling system, disabling the OS installation mode provided by the BIOS.

7. The computer-implemented method of claim 1, further comprising:

generating, by the BIOS, a runtime variable including the LUN data and the UID; and

accessing, by the OS installer computing module, the runtime variable to install the OS on the first enumerated storage device.

8. The computer-implemented method of claim 1, further comprising after determining that the OS installation mode provided by the BIOS is enabled, resetting the information handling system.

9. The computer-implemented method of claim 1, further comprising:

generating, by the BIOS, a system management BIOS (SMBIOS) construct including the LUN data and the UID; and

accessing, by the OS installer computing module, the SMBIOS construct to install the OS on the first enumerated storage device.

10. An information handling system, comprising:

a memory media storing instructions;

a processor in communication with the memory media to execute the instructions to perform operations comprising:

identifying a plurality of storage devices of an information handling system, wherein a basic input/output system (BIOS) of the information handling system is associated with a first enumeration order of the storage devices, and an operating system (OS) of the information handling system is associated with a second enumeration order of the storage devices, wherein the first enumeration order and the second enumeration order are different;

enumerating the storage devices such that a particular storage device of the plurality of the storage devices is enumerated as the first enumerated storage device for both the BIOS and the OS of the information handling system based on the first enumeration order of the BIOS, wherein the first enumerated storage device is a partition of the particular storage device and identified as disk0, including:

determining that an OS installation mode provided by the BIOS is enabled;

in response to determining that the OS installation mode provided by the BIOS is enabled, i) exposing only the particular storage device, that is the first enumerated storage device based on the first enumeration order of the BIOS, to an OS installer computing module, and ii) disabling the remaining storage devices of the plurality of storage devices to the OS installer computing module;

determining that a logical unit number (LUN) is set by the BIOS as the first enumerated storage device, including setting a unique identifier (UID) for the particular storage device;

in response to determining that the LUN is set by the BIOS as the first enumerated storage device:

fetching, by an OS installer computing module, data associated with the LUN based on the UID;

parsing, by the OS installer computing module, the LUN data; and

assigning, by the OS installer computing module, based on the parsing, the LUN as the first enumerated storage device for the OS.

11. The information handling system of claim 10, the operations further comprising after exposing the particular storage device to the OS installer computing module, installing, by the OS installer computing module, the OS on the first enumerated storage device.

12. The information handling system of claim 10, the operations further comprising after assigning the LUN as the

first enumerated storage device for the OS, installing, by the OS installer computing module, the OS on the first enumerated storage device.

13. The information handling system of claim **10**, wherein the particular storage device is a boot optimized server storage device.

14. The information handling system of claim **10**, the operations further after rebooting the information handling system, restoring the remaining storage devices of the plurality of storage devices to the OS installer computing module.

15. The information handling system of claim **10**, the operations further after rebooting the information handling system, disabling the OS installation mode provided by the BIOS.

16. The information handling system of claim **10**, the operations further comprising:

generating, by the BIOS, a runtime variable including the LUN data and the UID; and

accessing, by the OS installer computing module, the runtime variable to install the OS on the first enumerated storage device.

17. The information handling system of claim **10**, the operations further comprising after determining that the OS installation mode provided by the BIOS is enabled, resetting the information handling system.

18. The information handling system of claim **10**, the operations further comprising:

generating, by the BIOS, a system management BIOS (SMBIOS) construct including the LUN data and the UID; and

accessing, by the OS installer computing module, the SMBIOS construct to install the OS on the first enumerated storage device.

19. A non-transitory computer-readable medium storing software comprising instructions executable by one or more computers which, upon such execution, cause the one or more computers to perform operations comprising:

identifying a plurality of storage devices of an information handling system, wherein a basic input/output system (BIOS) of the information handling system is associated with a first enumeration order of the storage devices, and an operating system (OS) of the information handling system is associated with a second enumeration order of the storage devices, wherein the first enumeration order and the second enumeration order are different;

enumerating the storage devices such that a particular storage device of the plurality of the storage devices is enumerated as the first enumerated storage device for both the BIOS and the OS of the information handling system based on the first enumeration order of the BIOS, wherein the first enumerated storage device is a partition of the particular storage device and identified as disk0, including:

determining that an OS installation mode provided by the BIOS is enabled;

in response to determining that the OS installation mode provided by the BIOS is enabled, i) exposing only the particular storage device, that is the first enumerated storage device based on the first enumeration order of the BIOS, to an OS installer computing module, and ii) disabling the remaining storage devices of the plurality of storage devices to the OS installer computing module;

determining that a logical unit number (LUN) is set by the BIOS as the first enumerated storage device, including setting a unique identifier (UID) for the particular storage device;

in response to determining that the LUN is set by the BIOS as the first enumerated storage device:

fetching, by an OS installer computing module, data associated with the LUN based on the UID;

parsing, by the OS installer computing module, the LUN data; and

assigning, by the OS installer computing module, based on the parsing, the LUN as the first enumerated storage device for the OS.

20. The computer readable medium of claim **19**, the operations further comprising after exposing the particular storage device to the OS installer computing module, installing, by the OS installer computing module, the OS on the first enumerated storage device.

* * * * *