H. F. LEISSNER.

FUEL GASIFIER FOR INTERNAL COMBUSTION ENGINES.

APPLICATION FILED MAR. 18, 1914.

1,136,818.

Patented Apr. 20, 1915.

Fig. 1.

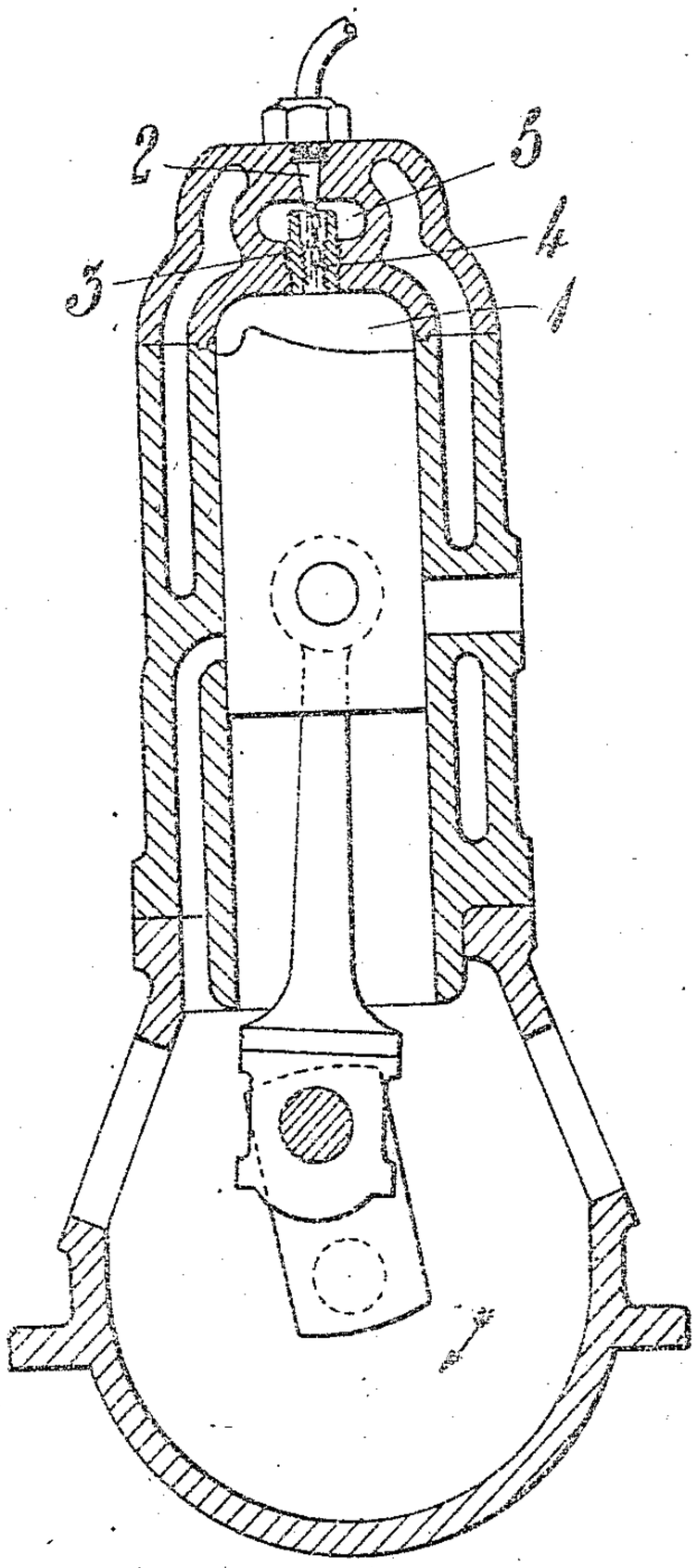

Fig. 2.

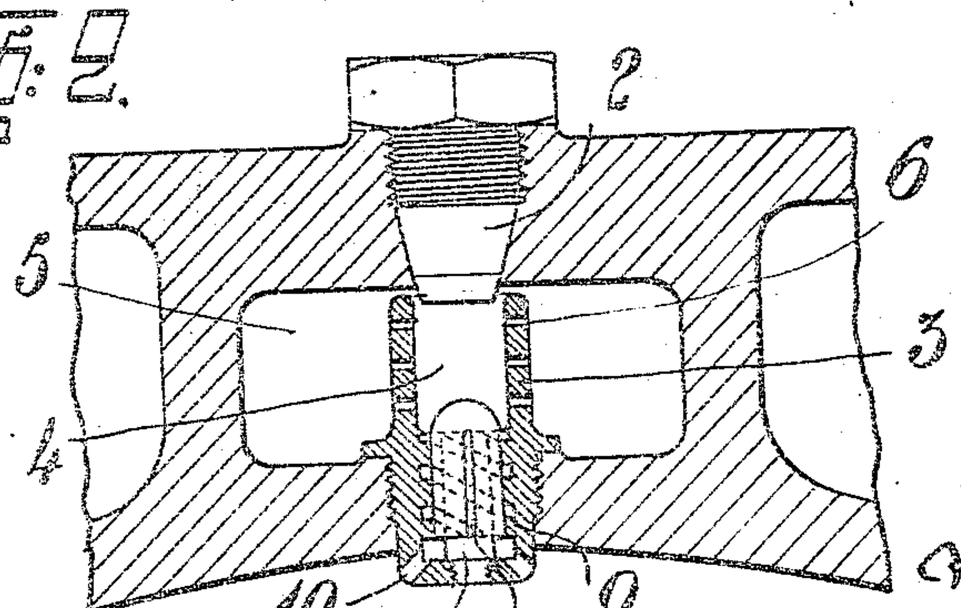

Witnesses

E. J. Sheehy.

Frank B. Sheehy.

Inventor

H. F. Leissner

by

James J. Sheehy & Co.

attys.

UNITED STATES PATENT OFFICE.

HARRY FERDINAND LEISSNER, OF LJUSNE, SWEDEN.

FUEL-GASIFIER FOR INTERNAL-COMBUSTION ENGINES.

1,136,818. Specification of Letters Patent. Patented Apr. 20, 1915.

Application filed March 18, 1914. Serial No. 825,624.

To all whom it may concern:

Be it known that I, HARRY FERDINAND LEISSNER, a citizen of the Kingdom of Sweden, residing at Ljusne, Sweden, have invented new and useful Improvements in Fuel-Gasifiers for Internal-Combustion Engines, of which the following is a specification.

The present invention relates to internal combustion engines of the kind in which liquid fuel, especially heavy hydrocarbons, as for instance crude naphtha, is used and in which the ignition of the fuel is effected by compressing the combustion air to the temperature of ignition of the fuel, while the combustion of the fuel takes place in two stages, viz. on the one hand, during a preëxplosion effected in a primary explosion chamber at or immediately before the beginning of the working stroke and serving to introduce the fuel into the combustion chamber proper, and to spread it in the same, and, on the other hand, during a complete combustion of the fuel effected in the said combustion chamber at the beginning of the working stroke.

The invention has for its principal object to force out in a reliable manner all the fuel from the primary explosion chamber into the combustion chamber and to equalize the pressure therein.

The invention comprises, in the first instance, a division of the primary explosion chamber into two compartments, one of which is located opposite the fuel nozzle and communicates with the combustion chamber through one or more channels, while the other compartment communicates with the first named compartment through one or more channels, the sectional area of which is less than the sectional area of the channel or channels connecting the first named compartment with the combustion chamber.

The invention further comprises such dimensioning of the channels connecting the compartments of the primary explosion chamber with each other in relation to the channels connecting the primary explosion chamber with the cylinder or combustion chamber, that the sectional area of the first named channels relatively to the sectional area of the latter channels is only of such a size that all the fuel injected into the outer compartment of the primary explosion chamber will be completely consumed, even at the highest load of the engine, by means of the air contained in the said compartment.

The invention comprises, finally, the provision of a spraying nozzle located between the primary explosion chamber and the cylinder, and an improved arrangement of the channels connecting the compartments of the primary explosion chamber, for the purpose of effecting a rapid equalization of the pressures in said compartments.

On the accompanying drawing Figure 1 shows a sectional view on an engine provided with a primary explosion chamber arranged according to the present invention. Fig. 2 shows, on a larger scale, a similar section through the head of the cylinder of an internal combustion engine provided with another form of a primary explosion chamber.

Referring to the drawing, 1 is the working space or combustion chamber of the engine provided with a cooling jacket and being in well known manner in open communication with a likewise cooled primary explosion chamber into which opens the fuel injecting nozzle 2. The said primary explosion chamber is, by means of a sleeve 3 which is screwed into the port or channel connecting the primary explosion chamber with the combustion chamber 1, divided into two compartments 4 and 5 communicating with each other, of which the former 4 consists of the inner space of the sleeve 3 located opposite the fuel nozzle 2, while the other or outer compartment 5 consists of the annular space around the sleeve 3. The upper end of the sleeve 3 is placed so nearly to the fuel nozzle 2 and the upper wall of the explosion chamber that only a narrow slot remains between the compartments 4 and 5. According to Fig. 1 said slot forms the only connection between the compartments of the primary explosion chamber, while according to Fig. 2 said compartments are connected also by apertures 6 in the wall of the sleeve 3.

As is shown in Fig. 1, the compartment 4 of the primary explosion chamber communicates direct with the cylinder chamber 1, whereas, according to Fig. 2, the sleeve 3 is provided with a bottom into which is screwed in a fuel injecting device 7 provided with straight longitudinal channels 8 intersected by oblique or spiral channels 9 which are provided in the inner wall of the sleeve 3 for the purpose of spraying the

fuel. The said channels open into apertures 10 in the bottom of the sleeve 3, said apertures being directed outwardly so that the fuel will be sprayed in a suitable manner in the air contained in the cylinder chamber 1.

The sectional area of the connecting channel or channels between the compartments 4 and 5 of the primary explosion chamber is less than the sectional area of the channel or channels between the compartment 4 and the cylinder chamber 1, as will be more particularly described herebelow.

When an engine constructed according to Fig. 1 or 2 is running, the fuel is ejected through the nozzle 2 immediately before the working stroke begins, when the temperature in the primary explosion chamber on account of the compression of the combustion air has been raised to or above the temperature of ignition of the fuel. The fuel entering the primary explosion chamber in a finely divided state is ignited at the moment of injection and partly consumed in the compartment 4. Owing to the increase of pressure caused thereby, part of the fuel is forced into the compartment 5, while the remaining or larger part of the fuel is forced into the cylinder chamber 1 and completely consumed therein. By suitable choice of the sectional area of the channel or channels between the compartments 4 and 5, one may attain that all the fuel forced into the compartment 5 is completely consumed in the air contained in said compartment, even if the engine is running at a maximum load. The apertures 6 shown in Fig. 2 will effect a very rapid equalization of the pressures in the two compartments 4 and 5. As soon as the pressures in the compartment 4 and the cylinder chamber 1 have been equalized, the combustion gases compressed to a high pressure in the compartment 5 will flow into the compartment 4 and therefrom into the cylinder chamber 1, at the same time carrying with them all the residues of fuel from the compartment 4 and the various connecting channels, said residues being then completely consumed in the cylinder chamber 1.

The division of the primary explosion chamber described above and shown on the drawing may be effected in different manners without deviating from the principle of the invention.

Having now described my invention, what I claim as new and desire to secure by Letters Patent is:

1. In an internal combustion engine, the combination of a combustion chamber, a primary explosion chamber, and means dividing said primary explosion chamber into two compartments, said compartments being in permanent open communication with each other and one of them being isolated from the combustion chamber and the other extending to and being in direct open communication with the combustion chamber.

2. In an internal combustion engine, the combination of a combustion chamber, a primary explosion chamber, means for introducing liquid fuel into the latter, and means dividing said primary explosion chamber into two compartments, the latter being in permanent open communication with each other, and one of them being isolated from the combustion chamber and the other extending to and being in direct open communication with the said fuel-introducing means and the combustion chamber.

3. In an internal combustion engine the combination of, a combustion chamber, a primary explosion chamber, means for introducing liquid fuel into the latter, and means dividing said primary explosion chamber into two compartments, the latter being in permanent open communication with each other, and one of them being isolated from the combustion chamber, and the other extending to and being in direct open communication with the said combustion chamber, the passages allowing the communication between the said two compartments of the primary explosion chamber being of smaller cross sectional area than the passages allowing the communication between one of said compartments and the combustion chamber, substantially as and for the purpose set forth.

4. In an internal combustion engine the combination of a combustion chamber, a primary explosion chamber, means for introducing liquid fuel into the latter, means dividing the latter into two compartments, and a fuel spraying device between the said primary explosion chamber and the combustion chamber, the compartments of the primary explosion chamber being in permanent open communication with each other and one of them being isolated from the combustion chamber and the other being arranged to receive fuel from the fuel-introducing means and being extended to and arranged in direct open communication with the said combustion chamber, substantially as and for the purpose set forth.

5. In an internal combustion engine the combination of, a combustion chamber, a primary explosion chamber, a sleeve extending into the latter and dividing it into two compartments one outside and one inside said sleeve, a fuel nozzle opening into the latter compartment, the said compartments being in permanent open communication with each other and that inside the sleeve being extended to and arranged in direct open communication with the said combustion chamber, substantially as and for the purpose set forth.

6. In an internal combustion engine the combination of, a combustion chamber, a primary explosion chamber, a perforated sleeve extending into the latter and being formed with a perforated bottom, said sleeve dividing the primary explosion chamber into two compartments one outside and one inside said sleeve and in permanent communication, a fuel nozzle opening into the inside compartment, and a body inserted in said sleeve and formed with longitudinal grooves intersected by grooves formed in the wall of said sleeve, the said grooves establishing a direct open communication between the said inner compartment and the said combustion chamber, substantially as and for the purpose set forth.

In testimony that I claim the foregoing as my invention, I have signed my name in presence of two subscribing witnesses.

HARRY FERDINAND LEISSNER.

Witnesses:

JOHN DELMAR,

GERHARD NORDSTRAND.