N. W. KLEINMAN.

AUTOMATIC DIRECTION INDICATOR.

APPLICATION FILED APR. 8, 1914.

1,136,814.

Patented Apr. 20, 1915.

2 SHEETS—SHEET 1.

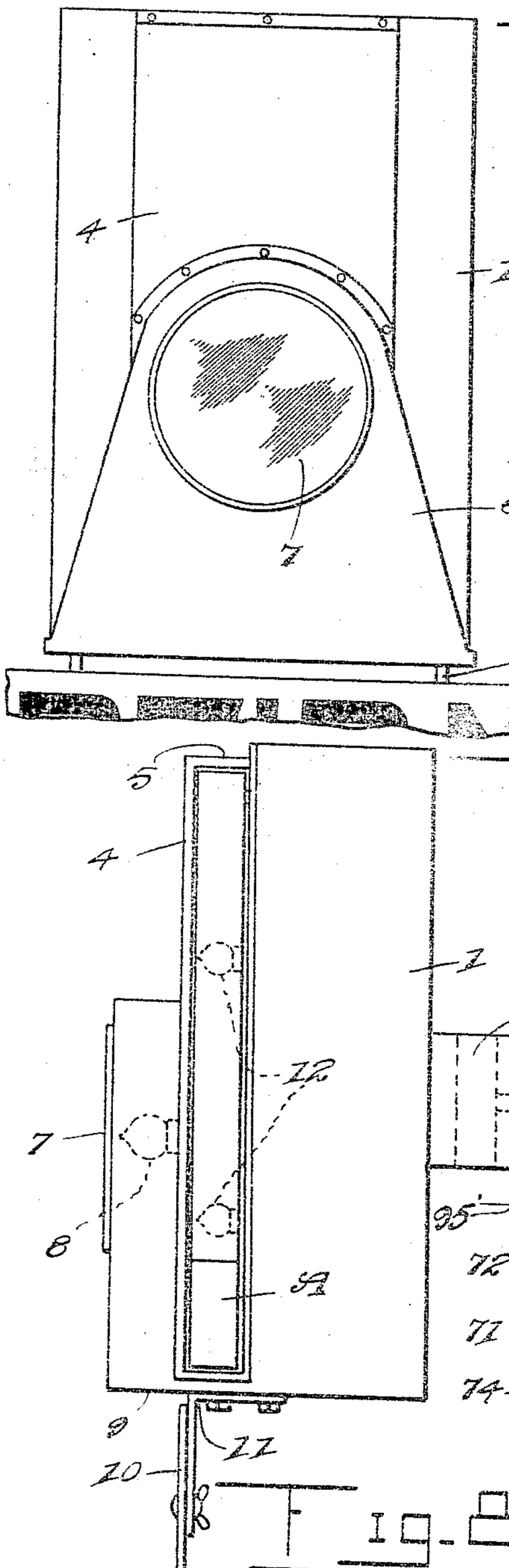

Fig. 1.

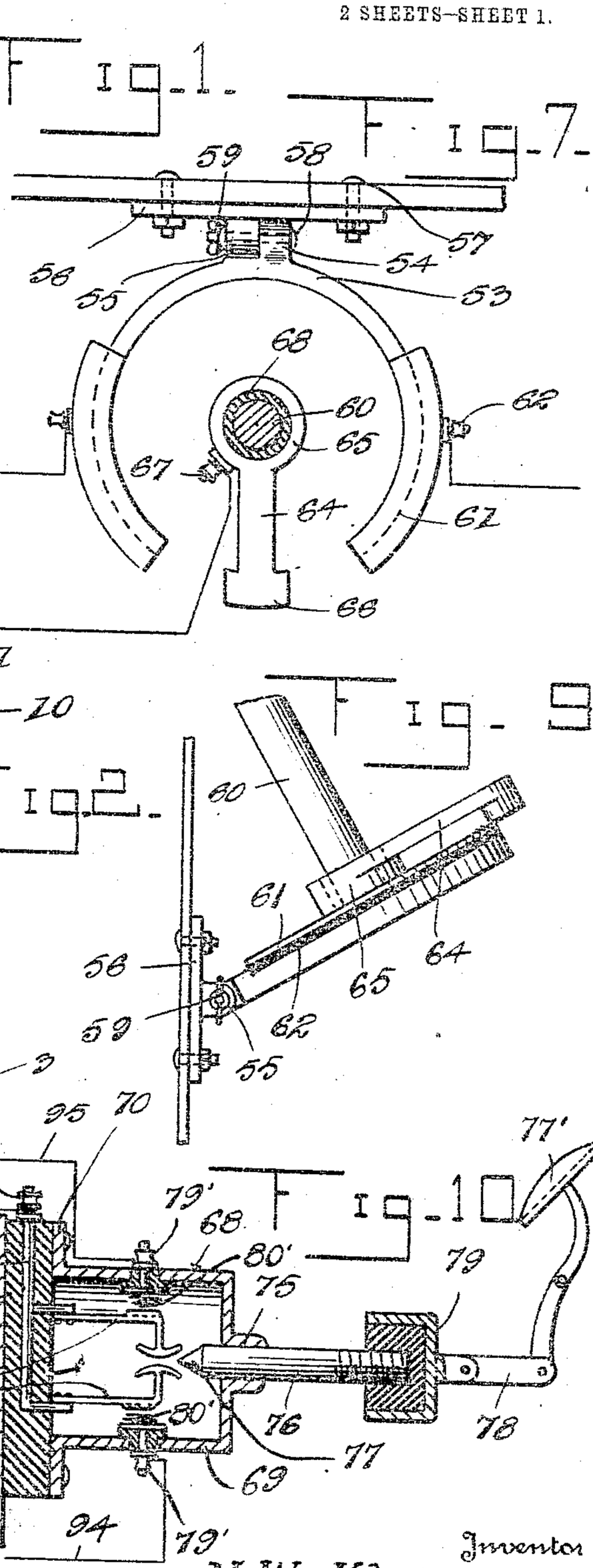

Fig. 7.

Fig. 2.

Fig. 9.

Fig. 10.

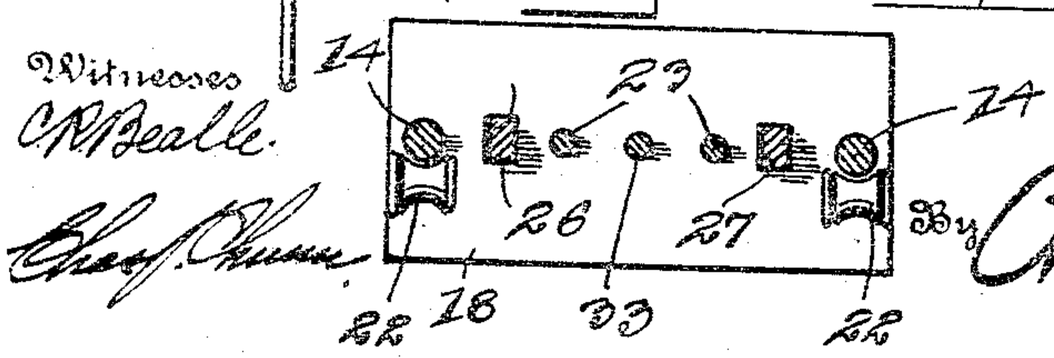

Fig. 11.

Witnesses
C. M. Beall.
Chas. F. Blum.

Inventor
N. W. Kleinman.
By A. H. Kleinman Jr.
Attorney

N. W. KLEINMAN.

AUTOMATIC DIRECTION INDICATOR.

APPLICATION FILED APR. 8, 1914.

1,136,814.

Patented Apr. 20, 1915.

2 SHEETS—SHEET 2.

FIG. 4.

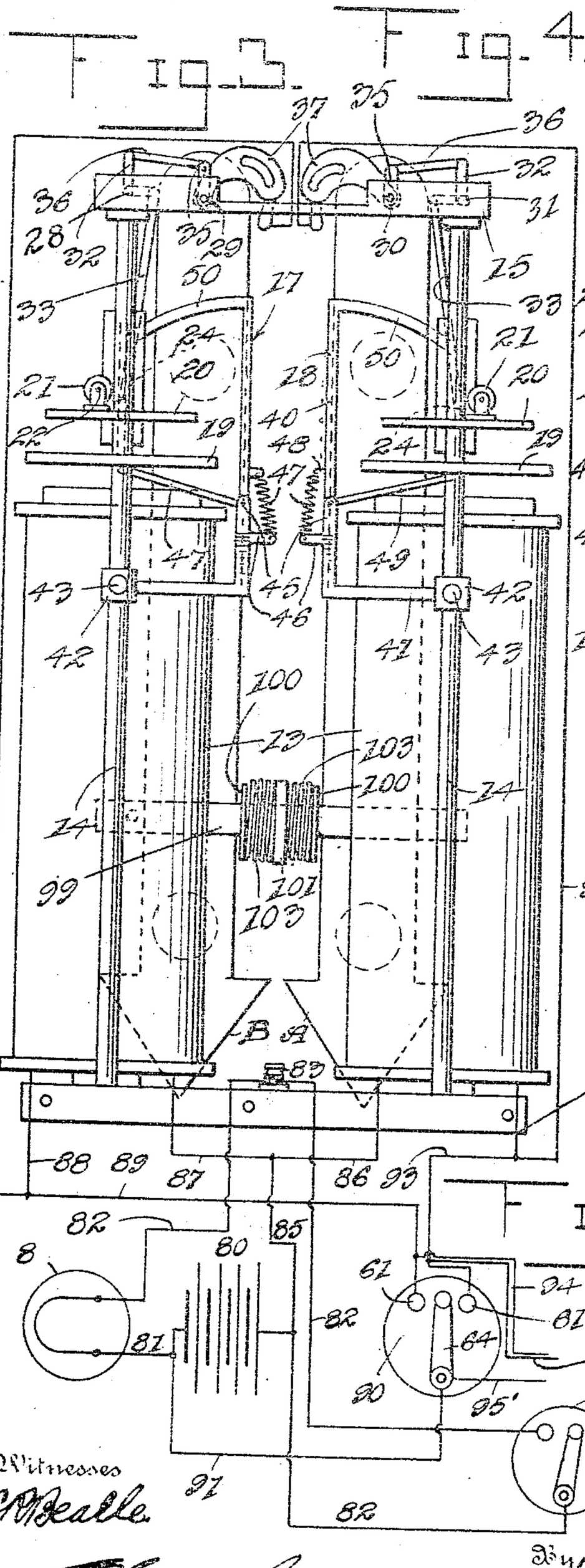

FIG. 5.

FIG. 3.

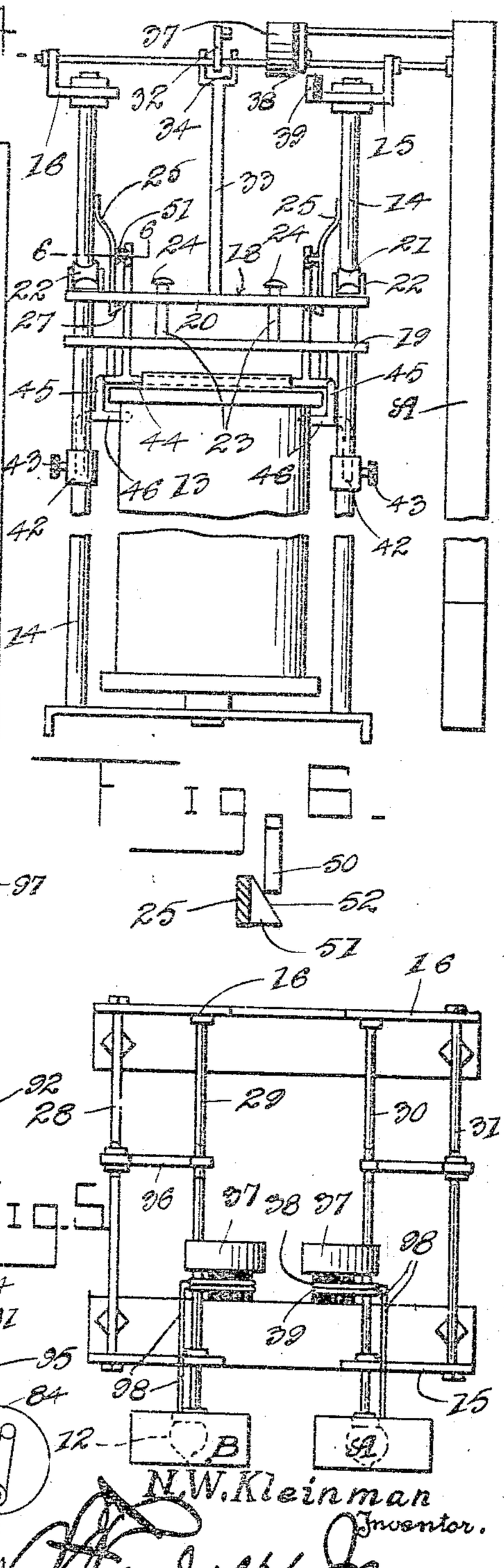

FIG. 6.

FIG. 2.

Witnesses

C. M. Keller

Chas. F. Thum

N. W. Kleinman

Inventor.

By A. Landreth Jr.

Attorney

UNITED STATES PATENT OFFICE.

NATHANIEL W. KLEINMAN, OF BROOKLYN, NEW YORK

AUTOMATIC DIRECTION-INDICATOR.

1,136,814. Specification of Letters Patent. Patented Apr. 20, 1915.

Application filed April 8, 1914. Serial No. 830,442.

To all whom it may concern:

Be it known that I, NATHANIEL W. KLEINMAN, a citizen of the United States, residing at Brooklyn, in the county of Kings and State of New York, have invented certain new and useful Improvements in Automatic Direction-Indicators; and I do hereby declare the following to be a full, clear, and exact description of the invention, such as will enable others skilled in the art to which it appertains to make and use the same.

My invention relates to improved means for indicating the direction of travel of a vehicle to following vehicles and resides in the provision of a device of the character described which is automatic in operation.

An important object of my invention is to provide a device of the character described which is adapted to be attached to the rear of an automobile and which employs indicating arrows that are automatically swung from opposite sides of a casing so as to indicate the contemplation of the driver taking a right or left turn or stopping.

Another important object of my invention is to provide novel means for lighting the electric lamps that are contained within the indicating arrows, at the time of the movement of the arrows in the indicating position, so that the signal will be effective at night.

Another important object of my invention is to provide mechanism for operating the arrows as described above which is controlled automatically by the movement of the steering wheel of the automobile and which consists of magnets and a suitable arrangement of levers whereby the magnets when energized will operate the levers to move the indicating arrows into the desired position.

Another important object of my invention is to provide novel means for locking the operating mechanism against movement whereby accidental positioning of the indicating arrows is prevented.

Another important object of my invention is to provide novel means for controlling the circuits for the magnets which will cause both indicating arrows to move outwardly from the casing at right angles thereto so as to indicate the intention of the driver to stop, said means being controlled by the operator of the machine and positioned adjacent the foot board of the machine.

A further object of the invention is to provide a device of the character described which is reliable and efficient in operation, so constructed as to prevent likelihood of accidental derangement incident to shocks and jars caused by irregularities in the roadway over which the automobile travels, and is comparatively cheap to manufacture and install.

The above and additional objects are accomplished by such means as are illustrated in the accompanying drawings, described in the following specification and then more particularly pointed out in the claims which are appended hereto and form a part of this application.

With reference to the drawings, wherein I have illustrated the preferred embodiment of my invention as it is reduced to practice, and throughout the several views of which similar reference numerals designate corresponding parts: Figure 1 is a front elevation showing the device as it would appear when in assembled position and ready for attachment to the rear of an automobile, and a portion of the license numeral plate attached to the device, Fig. 2 is a side elevation of the device to be attached to the rear of an automobile, showing the tail lamp and lamps within the indicating arrows, securing member at the back of the casing for supporting the mechanism and the license numeral plate and securing means, attached to the casing, Fig. 3 is a front elevation of the mechanism for operating the arrows showing the arrows in down and locked position and the electrical circuit in a diagrammatic form, Fig. 4 is a side elevation of the operating mechanism, Fig. 5 is a top plan view of the operating mechanism showing the arrows attached thereto also the circuit closing means for the lamps in the arrows, Fig. 6 is a detail sectional view showing the lock releasing means for unlocking the mechanism, Fig. 7 is a sectional view taken through the steering column of the steering mechanism of the automobile showing the contact means for automatically operating the indicating arrows, Fig. 8 is a sectional view taken through the mechanism, Fig. 9 is a side elevation of the circuit closing mechanism as illustrated in Fig. 7, and Fig. 10 is

a longitudinal vertical section of the circuit closing means for moving the arrows into stop position.

Referring to the drawings forming a part of this specification and in which like numerals are employed to designate corresponding parts, the numeral 1 designates as an entirety a rectangular casing preferably formed of some suitable light metal and provided upon its rear wall with a securing clamp 2 having a set screw 3 mounted thereon, whereby the casing may be secured to a suitable bracket not shown, carried on the rear of an automobile.

The casing 1 is provided upon its front wall with an opening to provide for the connection of the mechanism contained in the casing with the indicating arrows A and B respectively. A rectangular cover plate 4 is secured at its angular end 5 to the front wall of the casing 1 in spaced relation thereto and serves to cover the arrows A and B when the arrows are in down position. A rear light compartment designated 6 as an entirety formed on the lower part of the main casing 1 and comprises a suitable lens 7 and an electric lamp 8. The lower wall of this compartment 6 is open as at 9 throughout its length to permit the lamp 8 therein to sufficiently illuminate a license number plate 10 that is secured upon the main casing 1 by an L-shaped bracket 11, so as to receive the light from the compartment 6.

The indicating arrows A and B are formed in the nature of hollow rectangular casings and each contain a plurality of electric lamps 12. The front wall of each arrow is formed of some suitable transparent material preferably glass to permit the lamps 12 to properly illuminate the arrow outlines at night, while the body portion of the arrows is preferably constructed of some light metal. The arrows are swingingly connected at their upper ends with the mechanism contained within the casing for operating the same and to be later described, and are adapted to be swung outwardly at right angles to the casing 1 and plate 4 in a plane parallel to the horizontal axis of the casing, when in indicating position.

The operating mechanism for moving the arrows into indicating position, best illustrated in Figs. 3, 4, 5 and 6 consists of a pair of vertically arranged electromagnets 13 that are arranged within the casing 1 and preferably secured to the bottom wall thereof in any suitable manner. Arranged within the casing 1 and surrounding the magnets 13 is a skeleton frame work for supporting the operating mechanism which consists of four vertical standards 14 secured at their lower terminals in any suitable manner to the lower portion of the casing 1 and connected in pairs by angular connecting bars 15 and 16 which are secured at their terminals in any suitable manner to the upper end of the standards 14. These standards 14 surround the magnets 13 and are formed of some suitable light metallic material.

Mounted upon the standards 14 is the mechanism for operating each arrow and is designated as an entirety by the numerals 17 and 18 respectively. This mechanism 17 and 18 is similar in construction and arrangement and it is thought necessary to describe the mechanism for operating only one arrow in this connection.

Referring particularly to Fig. 4 in which is illustrated the mechanism 18 for operating the arrow A the numeral 19 designates a preferably rectangular plate which is slidably mounted upon two of the standards 14 that are arranged upon opposite sides of the magnets 13 for operating the mechanism 18. This plate 19 is arranged transversely of the standards 14 and is adapted to be attracted by the magnets 13 adjacent thereto and disposed beneath the plate. Mounted above the plate 19 for sliding movement on the standards 14 upon which the plate 19 is mounted is a similarly shaped plate 20 having friction rollers 21 journaled in bearings 22 at each end thereof that are adapted for engagement with the standards 14 to permit the free sliding movement of the plate 20. Vertical pins 23 are secured in spaced relation adjacent the central portion of the plate 19, are inserted for sliding movement through openings in the upper plate 20 and provided with enlarged heads 24 at their upper ends of greater size than the openings in the plate 20 and which serve to prevent withdrawal of the pins relative to the plate 20. It will thus be seen that when the plate 19 is moved toward the magnets 13 by the attraction of the magnets, the plate 20 is correspondingly moved owing to the pin and slot connection previously described. Mounted upon the standards 14 are spring catches 25 that are secured in spaced parallel relation to the member 14 and extend through rectangular openings 26 in the top plate 20 at their free terminals. The free ends of the spring catches 25 are offset to provide hooks 27 that engage the under face of the plate 20, normally, and hold the plates 19 and 20 against accidental movement. The openings 26 in the top plate 20 are of considerably greater size than the hooks 27 on the free ends of the members 25 to permit the ready disengaging of the hooks 27 from the plate 20. The spring action of the spring catches 25 tends to force the catches outwardly from the standards 14 so that the hooks 27 are normally disposed in supporting and locking engagement with the plate 20.

Journaled transversely of the connecting bars 15 and 16 is a plurality of shafts 28, 29,

30 and 31. The shafts 29 and 30 are extended forwardly through the front wall of the casing 1 and rigidly secured in any suitable manner to the arrows B and A respectively so that a movement of the shafts 29 and 30 produces a subsequent movement of the arrows B and A. The shaft 28 is operatively connected with the mechanism 17 for operating the arrow B and the shaft 31 is likewise connected to the mechanism 18 for operating the arrow A. Mounted intermediate its ends upon the shaft 31 is a bell crank lever 32. One arm of his bell crank lever 32 is pivotally connected with the upper terminal of a vertical operating rod 33 that is connected at its lower end in any suitable manner to the central portion of the upper plate 20. The upper portion of the rod 33 is provided with a U-shaped bracket 34 in which the aforementioned arm of the bell crank lever 32 is pivoted by means of a pivot pin journaled through the arm of the bracket. Mounted or formed on the shaft 30 is a short arm 35 that is connected with the other arm of the bell crank lever 32 by means of a link 36 pivoted at its end to the aforementioned arm. The short arm 35 is normally in a vertical position and is rigidly secured to the shaft 30 so that its movement in a plane of 90 degrees is sufficient to cause the arrow A to move to full extended position. It will thus be seen that upon the energization of the magnet 13 operating in conjunction with the mechanism 18 for operating the arrow A, and assuming the spring latch 25 to be in unlocked position, the plate 19 is attracted by the magnet and the plate 20 is subsequently moved downwardly causing a pull on the rod 33. When the rod 33 is pulled the bell crank lever 32 is operated which action causes the link 36 to transmit a push to the arm 35 which in turn rotates the shaft 30 and subsequently moves the arrow A into extended signaling position.

The action above described of the shaft 30 and coöperating parts is aided materially by a curved weight 37 that is fixed upon the shaft 30 at right angles thereto and is normally poised so that when the spring catch 25 is released the weight moves downwardly.

Mounted upon the weight 37 upon one face thereof is a contact member 38 of some suitable contacting metal that is adapted to coöperate with a contact member 39 carried upon the connecting angle bar 15. These contacts 38 and 39 are adapted for coöperation with each other when the arrow A is moved into extended signaling position to cause the lamps 12 in the arrow to be illuminated. Conducting wires to be later described are suitably connected with these contacts 38 and 39.

As a means for releasing the spring catches 25 so that the operation of the arrow may be had there is provided a U-shaped frame 40. This frame 40 is pivotally supported so that its arms are disposed in a horizontal plane relative to the standards 14. An angular bracket 41 having a sleeve portion 42 on one end slidably mounted on one of the standards 14 and provided with a set screw 43 supports the U-shaped frame. A pair of these brackets 41 is provided and each bracket is slidably mounted after the manner described on the members 14.

A pair of frames 40 is necessary for the proper operation of both catches 25 and each pair is connected by a horizontal integral rod 44. This rod 44 is extended beyond the lowermost of the arms of the frame and is pivotally mounted in the free vertical terminal 45 of the bracket 41.

A right angular extension 46 is formed on the intermediate portion of the bracket 41 and has connected therewith a helical retractile spring 47. This spring is connected at its other terminal to an extension 48 on each frame that is disposed above the pivot connection of the frame. The lowermost of the arms 49 of each frame 40 is disposed in an inclined plane relative to the horizontal axis of the device and extends in an angular position between the magnets 13 and plate 19. This arm 49 on each frame is disposed upon opposite sides of the magnets and engages at its free end, the under face of the plate 19 adjacent the ends of the plate 19, thus the plate 19 is permitted free downward movement without interference by the arms 49. The uppermost of the arms 50 of each frame is curved and disposed in a downwardly inclined plane and adapted for engagement with projections 51 carried intermediate the ends of the catches 25. This projection 51 is provided with an outer inclined face 52 that is adapted for engagement with the arm 50 when the frames are swung thus moving the catches 25 in a position so that the plate 20 is free to move relative to the hooks 27 on the ends of the catches 25 and the desired operation of extending the indicating arrows is had.

When the magnets 13 are energized the plate 19 which is normally in a position such as illustrated in Fig. 4, in that the heads 24 of the pins 23 are spaced from the plate 20 thus permitting movement of the plate 19, in being attracted by the magnets moves downwardly and in so doing forces the arms 49 of each frame 40 downwardly so that the frames 40 swing on their pivot points as described and the arms 50 engage the inclined faces 52 on the projections 51 causing the catches 25 to permit movement of the plate 20 downwardly so that the desired operation is permitted. The spring 47 serves to return the frames 40 into normal

position such as illustrated in Fig. 3 in the drawings.

As a means for automatically operating the mechanism hereinbefore described when the vehicle driver contemplates making a turn, there has been provided an arcuate supporting frame 53 having an ear 54 intermediate its ends adapted for coöperation with an ear 55 on a rectangular securing plate 56. The plate 56 is bolted as at 57 to the dash board or some other suitable part of the automobile adjacent the driver's seat. A pin 58 is inserted through the ears 54 and 55 and has a winged nut 59 carried upon its unheaded terminal for the purpose of securing the arcuate frame 53 in the desired position. The frame 53 is positioned so as to nearly encircle the steering column 60 of the steering gear of the automobile. Secured upon the ends of the arcuate frame 53 are contact plates 61 which are suitably insulated as at 62 from the frame 53. These contact plates 61 are of sufficient length to permit the desired operation of the mechanism when the driver contemplates taking a turn, and are approximately equivalent in length to 90 degrees of the arc of rotation of the steering column. Binding posts 63 are arranged upon the contacts 61 intermediate the ends thereof. Fixed upon the steering column 60 and adapted to rotate therewith is a contact arm 64 having an integral securing collar 65 at one end and an enlarged contact head 66 at its free end. The free end 66 is adapted to engage the contacts 61 when the steering column is rotated. A binding post 67 is secured to the hub portion 65 of the arm. Insulation 68 is interposed between the collar 65 and steering column 60.

As a means for closing the two circuits simultaneously so that the arrows A and B move into signaling position simultaneously and indicate that the driver intends to stop the vehicle, there has been provided circuit closing mechanism designated 68 as an entirety and that is suitably mounted adjacent the driver's seat upon the floor board of the automobile or other suitable place. This circuit closing mechanism 68 is illustrated in Fig. 10 in the drawings and consists of a casing 69 having securing flanges 70 adjacent one end thereof which is open. The open end of the casing 69 is adapted to be secured to some suitable part of the automobile and has interposed between it and the automobile a strip or layer of insulation 71. Mounted within the strip 71 is a contact bar 72 having a binding post 73 on one end thereof. Suitably secured or connected with the contact bar 72 are spaced spring contact members 74. These spring arms 74 extend outwardly into the casing 69 for a distance equivalent to half the length of the casing. The casing is provided centrally of its closed end with an opening 75 in which is slidably mounted a contact plunger 76 provided with a tapered contact head 77 that is disposed within the casing and adapted for engagement with the end of the spring arms 74, which are curved. A foot pedal 77′ is connected with the plunger 76 and is suitably pivoted to some part of the automobile at an accessible point relative to the driver. The pedal 77′ is connected with the plunger 76 by means of a link 78 and a detachable securing collar 79 into which one end of the plunger 76 is threaded. Binding posts 79′ and 79″ are arranged upon opposite sides of the casing 69 and are suitably connected with spiral expansive springs 80′ that are arranged within the casing 69 and normally spaced from the contact arms 74. It will be readily seen that when the plunger 76 is pushed inwardly with relation to the casing and engages the contact arms 74, the contact arms 74 will be forced apart so as to engage the springs 80′ thus closing the circuit after a manner which will be later more fully described.

Referring particularly to Fig. 3 wherein there is illustrated a diagrammatic view of the electrical circuit for operating the mechanism the rear lamp 8 receives its current from a battery or some other suitable source 80 through a conductor wire 81 that is connected with the lamp 8 and battery 80 and a second conductor wire 82 which is connected at one end with the lamp 8 is secured to a binding post 83 on the bottom part of the casing 1 and from the binding post extends to a one point switch 84 and back to the battery 80. The switch 84 is operated to display the rear light 8 at night and is preferably placed upon the dash board or some other suitable part of the automobile where it is accessible.

The circuit for operating the mechanism 17 and arrow B and for operating the mechanism 18 relative to the arrow A consists of a conductor wire 85 that is connected with the wire 82 adjacent the battery terminal thereof and is provided at its other end with branch conducting wires 86 and 87 which respectively connect with the magnets 13 of each mechanism 17 and 18. One side of the circuit is thus apparent through the medium of the main conducting wire 85 and branch conductors 86 and 87. The second conducting wire for the magnets 13 for operating the mechanism 17, consists of a conducting length 88 which is connected at its terminals to the magnets and to a wire 89 that is connected with one of the contact members 61 of the automatic circuit closing mechanism on the steering post which is illustrated in diagram in Fig. 3 and designated 90. It will thus be seen that when the contact arm 64 is in engagement with the left hand con-

tact 61 in Fig. 3, the circuit is closed relative to the magnets 13 for operating the mechanism 17 through the conducting wires 88 and 89, 82, 85 and 87 as hereinbefore described. The switch arm 64 is connected to the lamp conductor 81 adjacent its battery terminal by means of a conducting length 91 thus completing the circuit relative to the left hand magnet 13. The second conducting line for the magnet 13 for operating the mechanism 18 consists of a short conducting length 92 that is connected with the right hand contact member 61 by means of a wire 93, thus it will be seen that when the contact arm 64 is moved into engagement with the right hand contact 61, the circuit relative to the magnet 13 for operating the mechanism 18 and arrow A, is closed, through the medium of the conductors 82, 85 and 86 of one line, and conductors 81, 91, switch arm 64 and conducting wires 92 and 93.

Relative to the switch mechanism for closing both circuits and which is particularly illustrated in Fig. 10 in the drawings, conducting wires 94 and 95 connect both conductors 89 and 93 with the binding posts 79′ and 79″ respectively as illustrated in Fig. 10, and a conducting wire 95′ is connected at one terminal to the switch arm 64 and at its other terminal to the binding post 73 on the casing 69. When the plunger 76 is moved into engagement with the spring arms 74, both circuits are closed and the arrows A and B move into horizontal extended position, simultaneously, thus indicating that the driver contemplates stopping the vehicle. Conducting wires 97 serve to connect the contacts 39 with the conducting wires 89 and 93. Conducting wires 98 connect the contacts 38 and 39 with the lamp 12 in the arrows A and B as will be clearly seen with reference to Fig. 5 in the drawings.

The conductor 82 is grounded at the binding post 83 and the current passes through the mechanism to the contacts 38 which are mounted upon the shafts 29 and 30. It will thus be seen that the lamp 12 contained within the arrows A and B will be illuminated when the arrows move into extended position, as the circuit for the lamps is closed by the engagement of the contacts 38 with the ones 39. The lamps are illuminated when the stop signal is displayed in a similar manner as will be readily observed by reference to Fig. 3 in the drawings.

With particular reference to Fig. 3 there has been illustrated means for preventing the arrows from striking each other when swinging into inoperative position. This means consists of a bar 99 that is secured in any suitable manner within the casing for the mechanism and has mounted thereon a pair of slidable buffer plates 100. A fixed plate or flange 101 is carried centrally upon the bar 99 and a pair of helical expansive springs 102 and 103 are arranged between the buffer plates 100 and central plate 101. It will thus be seen that the cushioning action provided will be sufficient to prevent the arrows from coming into contact with each other and this is most desirable since it may be found preferable to construct the arrows of transparent material which is usually fragile, for the most part.

It is to be understood if desired the device may be operated by means of buttons arranged upon the steering wheel of the automobile.

The pedal 77′ is preferably the brake pedal of the automobile so that when the driver contemplates a stop the brake pedal is pushed consequently providing the automatic signaling that the driver intends to stop. In this connection it will be noted that in cases where a lever only is provided to apply the brake that the stop signaling mechanism could be operatively connected thereto.

It is not thought necessary to dwell further upon the operation of the device as it will be readily apparent with reference to the foregoing.

In reduction to practice, I have found that the form of my invention, illustrated in the drawings and referred to in the above description, as the preferred embodiment is the most efficient and practical; yet realizing that the conditions concurrent with the adoption of my device will necessarily vary, I desire to emphasize the fact that various minor changes in details of construction, proportion and arrangement of parts may be resorted to, when required, without sacrificing any of the advantages of my invention as defined in the appended claims.

What is claimed is:—

1. A direction indicator comprising a casing to be secured to the rear of an automobile, a pair of indicating arrows swingingly mounted within the casing to be swung outwardly therefrom in horizontal extended position, a frame mounted within the casing, said arrows pivotally supported by the frame, electromagnets mounted within the casing, plates slidably mounted on the frame above the magnets to be attracted thereby, a second set of plates slidably connected with the first plates and slidably mounted on the frame, shafts journaled in the frame for supporting the arrows, means for connecting the shafts with the second set of plates, and automatic means for energizing the magnets whereby the plates are moved on said frame and the arrows moved into extended horizontal position from the casing, operated when the automobile makes a right or left turn.

2. A direction indicator comprising a casing to be secured to the rear of an automo-

bile, a pair of indicating arrows swingingly mounted within the casing to be swung outwardly therefrom in horizontal extended position, a frame mounted within the casing, said arrows being pivotally supported by the frame, electromagnets mounted within the casing, plates slidably mounted on the frame above the magnets to be attracted thereby, a second set of plates slidably connected with the first plate and slidably mounted on the frame, shafts journaled in the frame for supporting the arrows, means for connecting the shafts with the second set of plates, automatic means for energizing the magnets whereby the plates are moved on said frame and the arrows moved into extended horizontal position from the casing, operated when the automobile makes a right or left turn, and means for automatically illuminating the arrows at the time of their disposal in horizontal extended position relative to the casing.

3. In a direction indicator, a casing to be mounted upon the rear of an automobile, a pair of indicating arrows swingingly connected with the casing to be swung into horizontal extended position, means mounted within the casing for operating the arrows, a pair of rotatable shafts mounted within the casing and secured at certain of their terminals to the arrows, said shafts operatively connected with the operating mechanism for the arrows, a frame for supporting the operating mechanism and shafts, electric lamps carried by said arrows, a contact member carried by said shafts, a fixed contact member on the frame, said first named contact member normally out of engagement with the fixed contact members, said contacts being operatively connected with a battery circuit and the electric lamps to coöperate with each other when the arrows move singly or together into horizontal extended position, to cause illumination of the arrows.

4. A direction indicator for automobiles comprising a casing to be secured to the rear of an automobile, a pair of indicating arrows, operating means for the arrows mounted within the casing, said arrows swingingly connected with the operating means to be swung from the casing into horizontal extended position, said operating mechanism comprising electromagnets to be energized automatically when the automobile makes a right or left turn, independently, and simultaneously, means for automatically and independently energizing the magnets operatively connected with the steering gear of the automobile, means for simultaneously energizing the magnets to be mounted adjacent the driver's seat of the automobile, a frame mounted within the casing, means slidably mounted on the frame and operatively connected with the arrows for extending the arrows, means for connecting said last named means with the arrows and means for holding the slidably mounted operating means against accidental sliding movement supported by said frame, said slidably mounted operating means to be attracted by the magnets when the magnets are energized.

5. An automobile direction indicator comprising a casing to be secured to the rear of an automobile, a frame mounted within the casing, a pair of arrows swingingly connected with the frame exteriorly of the casing to be swung into horizontal extended position relative to the casing, electromagnets mounted within the casing and to be singly and simultaneously energized, means for independently energizing the magnets, automatically operated when the vehicle makes a right or left turn, means for simultaneously energizing the magnets, a pair of plates slidable on the frame to be drawn downwardly when the magnets are energized, a second pair of plates slidably mounted upon the frame above the first pair, each plate of said second pair being slidably connected with the plates of the first pair, means connected with the second pair of plates and operatively connected with the arrows, spring catches for normally holding the second plates against sliding movement, and means for disengaging the spring catches from the second pair of plates operated by the first pair of plates when the magnets are energized.

In testimony whereof I affix my signature in presence of two witnesses.

NATHANIEL W. KLEINMAN.

Witnesses:

BENJ. KLEINMAN,

D. ROTHSTEIN.