T. D. KELLY.

INTERNAL COMBUSTION ENGINE.

APPLICATION FILED JULY 30, 1914.

1,136,812. Patented Apr. 20, 1915.

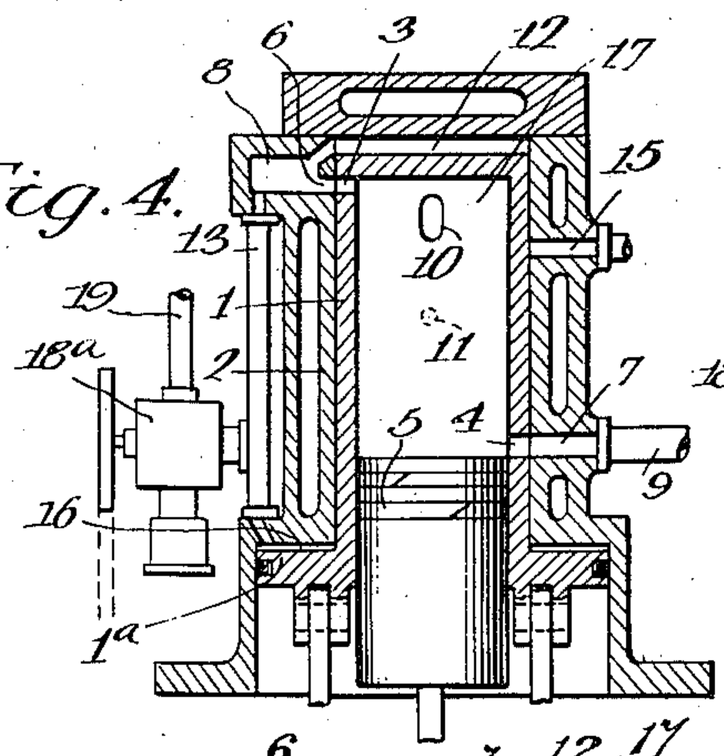

Fig. 4.

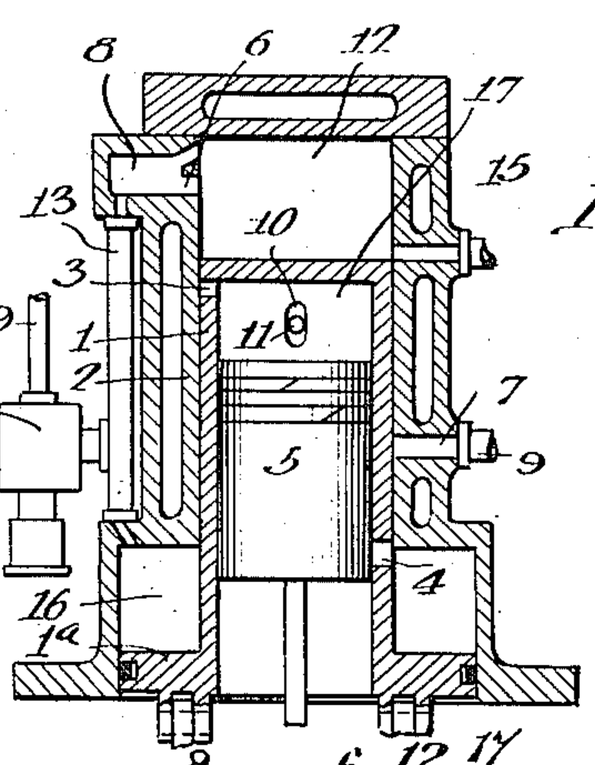

Fig. 3.

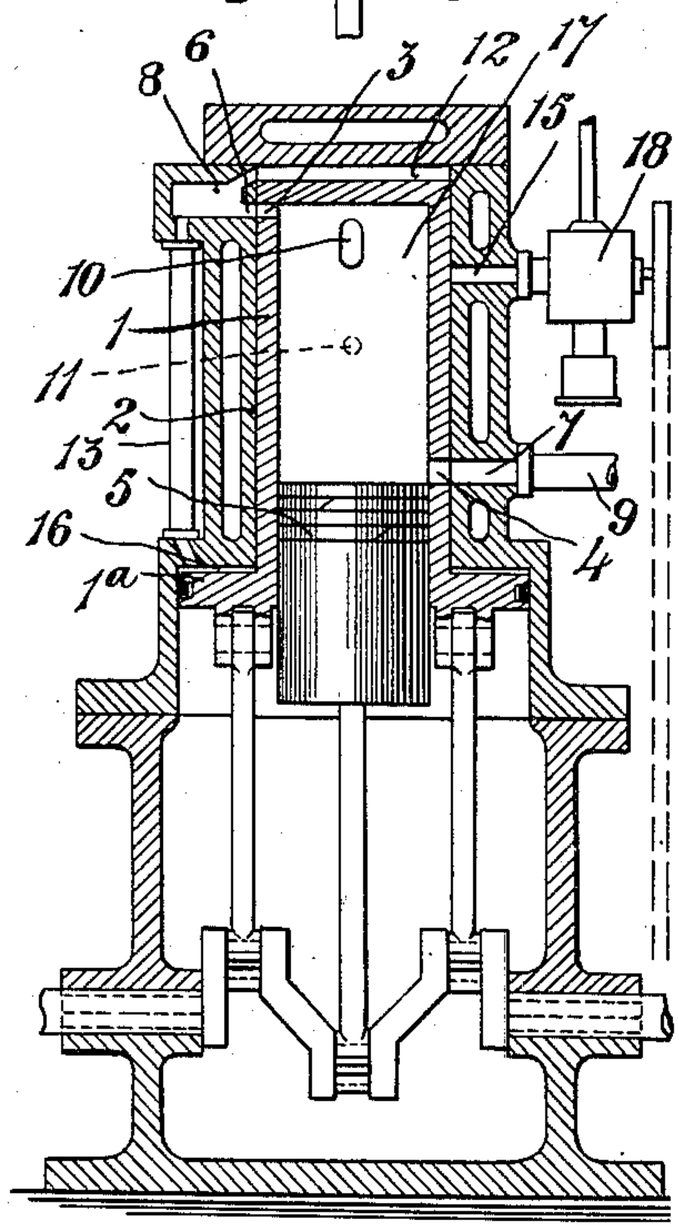

Fig. 2.

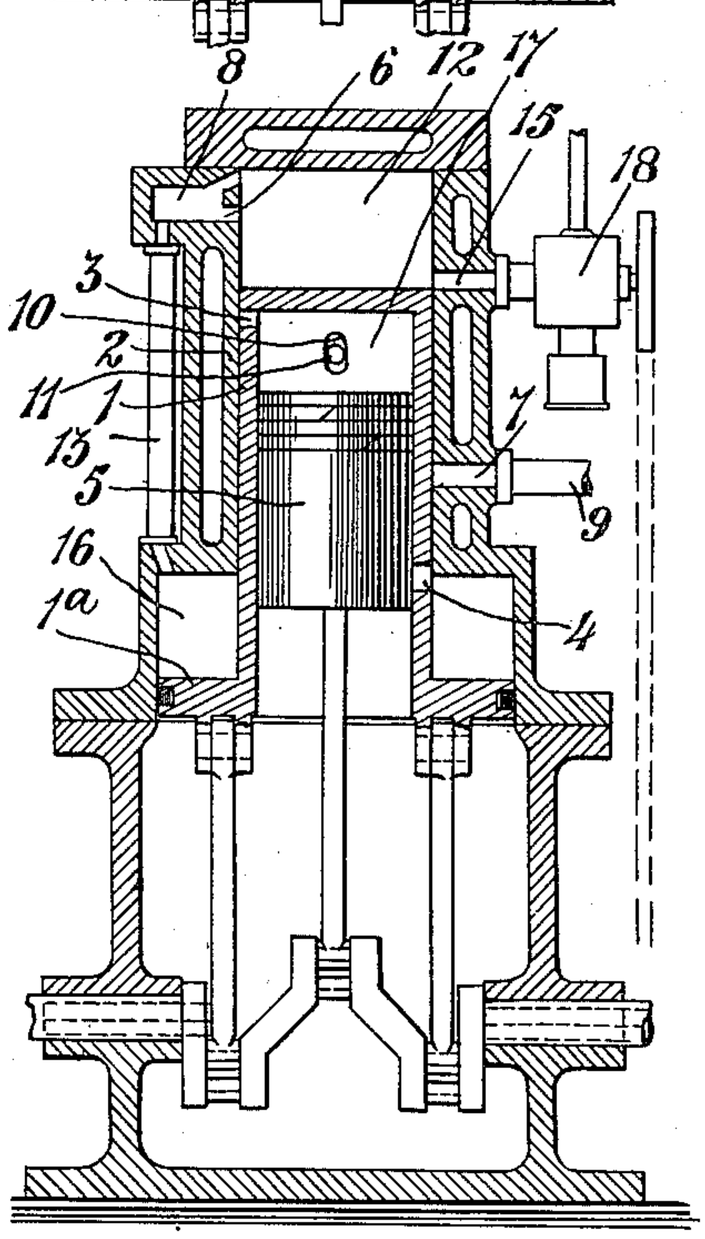

Fig. 1.

Witnesses

D. L. Morris

M. E. McDade.

Inventor

Thomas D. Kelly,

by James L. Morris

Attorney.

UNITED STATES PATENT OFFICE.

THOMAS DANIEL KELLY, OF SOUTHEND-ON-SEA, ENGLAND.

INTERNAL-COMBUSTION ENGINE.

1,136,812. Specification of Letters Patent. Patented Apr. 20, 1915.

Application filed July 30, 1914. Serial No. 854,147.

To all whom it may concern:

Be it known that I, THOMAS DANIEL KELLY, a subject of the King of Great Britain, residing at Southend-on-Sea, Essex, England, have invented certain new and useful Improvements in Internal-Combustion Engines, of which the following is a specification.

This invention relates to that class of internal combustion engine which has a fixed cylinder of two diameters and two pistons, one piston having two diameters forming a sleeve working over an ordinary piston, explosion taking place between the two pistons, the trunk piston thus forming an annular pump piston at the bottom.

My invention consists in an improved construction of such type of engine in which the space above the trunk piston is used as a pump space in addition to the annular space at the bottom, and the two spaces are connected by a pipe, the charge entering the pump space on the top of the trunk piston by means of a port or ports; thus a cold charge flows into this space above the hot piston while explosion takes place underneath, the exhaust from the working cylinder taking place at the end nearest the crank and the charge entering the working cylinder at the top thereof.

My invention will be clearly understood by the following description aided by the annexed drawings in which—

Figures 1 and 2 are vertical sections showing an engine with the pistons in the positions they respectively occupy when the charge is about to be fired (Fig. 1), and when the pistons are at their full outstroke and the exhaust port open (Fig. 2). Figs. 3 and 4 are views similar to Figs. 1 and 2 respectively but showing a slightly modified construction.

I construct the cylinder 2 and the trunk piston of two diameters, the said trunk piston thus having upper and lower heads 1 and 1^a of less and greater diameter, respectively. I provide the trunk piston with upper and lower openings 3, 4, (which may be either single openings, as shown, or rows of openings), these openings being appropriately spaced and located at or near the ends of the head 1 of said trunk piston, said head forming an explosion chamber in combination with the piston 5 which it incloses. Two openings 6, 7 are formed in the cylinder 2, to correspond with the respective openings 3, 4, in the piston head 1, the opening 6 leading from the charge chamber 8 and the opening 7 leading to the exhaust pipe 9; and between the openings 3, 4, in the trunk piston and those 6, 7, in the cylinder 2, I may form an opening 10 in the piston head 1 which (when the charge is about to be ignited) alines with a sparking plug 11 fixed to the cylinder, (see Fig. 1.)

Between the head 1 of the trunk piston and the end of the cylinder 2, is the space 12 which communicates with, and, in effect, forms a part of the charge chamber 8 and this charge chamber and the cylinder portion of larger diameter are connected by a pipe 13. In the cylinder wall I also position the charge inlet pipe 15 which is periodically cut off by the trunk piston as hereafter described. Now supposing the trunk piston and the piston 5 are at the ends of their outward strokes, that is to say with their alining heads at the greatest distance apart as in Fig. 2; in this position the charge inlet 15 to the space 12 is cut off by the trunk piston, the inlet 3 and opening 6 from the chamber 8 to the trunk piston are open and the exhaust ports 4 and 7 are uncovered by the inner piston 5 and the spaces between the pistons and the cylinder, *i. e.*, the space 12 between the heads of the trunk piston and the cylinder and the space 16 in the larger portion of the cylinder are reduced to their smallest volumes.

During the inward movement of the trunk piston, the internal space 17 of which has been previously charged with combustible mixture, the inlet 3 thereto is first cut off, and then a vacuum is created in the two charge spaces 12 and 16 and in the pipe 13 connecting the same, and on the trunk piston opening the primary charge inlet 15 to the space 12 the charge immediately rushes in and fills the spaces 12 and 16 (which are gradually enlarging) and the pipe 13 and the trunk piston completes its stroke. During the inward movement of the trunk piston the inner piston 5 moves lengthwise of the trunk piston but in an opposite direction thereto and first cuts off the exhaust 4 after which the two pistons compress the charge which is between them, and just as they start their opposite or outward movements the compressed charge in the combustion chamber 17 within the trunk piston is fired, or if the charge is air only, liquid fuel is injected. The trunk piston

and the piston 5 now move away from each other and the trunk piston first cuts off the charge inlet 15 and then compresses the previously drawn in charge in the two charge chambers 12 and 16 and the pipe 13, and the trunk piston then opens the inlet 3 and the opening 6 thereto and the compressed charge rushes into the combustion chamber 17. During this second movement of the trunk piston the inner piston 5 has been traveling outward and just before the inlets 3 and 6 to the interior of the trunk piston have been opened the inner piston 5 has opened the exhaust 4 so that the products of combustion immediately escape and the inlets 6 and 3 to the trunk piston being opened immediately afterward the incoming charge assists in clearing out any remaining products of combustion, and on the return of the trunk piston and the piston 5 a repetition of the operations takes place.

A rotary valve 18 may be used on the charge inlet 15 for controlling the admission of the charge in such manner that the operation during one revolution of the crank shaft may be the same as described, and on the next revolution a scavenging may be effected. As shown in Figs. 3 and 4, a rotary valve 18[a] similar to the valve 18 may be used in the pipe 13 in which case the inlet 15 is open to the atmosphere so that in a two stroke engine on the suction stroke of the trunk piston air only is drawn into the pump space 12 while gas is drawn into the pump space 16, and during the return stroke of the trunk piston is slightly compressed in the pump space 16 and just as it has arrived at the top of its stroke both gas and air flow into the combustion chamber 17, the air being in advance to form the combustible mixture for compression and firing in the usual way in the combustion chamber 17. In a four stroke engine the same cycle is repeated during one stroke of the trunk piston and on the next inward or suction stroke of the trunk piston the rotary valve shuts off the gas inlet to 16, air only enters through 15 and on upstroke of the trunk piston it enters the chamber 17 and acts as a scavenging charge to be ejected on the next stroke when a repetition of the previous two stroke cycle takes place.

What I do claim as my invention and desire to secure by Letters Patent is:—

1. In an internal combustion engine, a cylinder having upper and lower portions of less and greater diameter, respectively, a piston having heads of less and greater diameter, respectively, to work in said respective upper and lower cylinder portions, a charge chamber arranged at the upper end of the cylinder portion of less diameter and having an opening extending to the interior of said cylinder, a pipe connecting said charge chamber and the cylinder portion of greater diameter, the cylinder having an exhaust opening adjacent the lower end of its cylinder portion of less diameter, and having an inlet opening in the cylindrical wall of said cylinder portion of less diameter and at some distance below said charge chamber and above said exhaust opening, the reduced head of said piston having inlet and exhaust openings which in the extreme upper position of said piston register with said opening leading from said charge chamber and said exhaust opening of said cylinder, and a second piston working within the reduced head of said first-named piston and moving lengthwise of said first-named piston in an opposite direction thereto.

2. In an internal combustion engine, a cylinder having upper and lower portions of less and greater diameter, respectively, a piston having heads of less and greater diameter, respectively, to work in said respective upper and lower cylinder portions, a charge chamber arranged at the upper end of the cylinder portion of less diameter and having an opening extending to the interior of said cylinder, a pipe connecting said charge chamber and the cylinder portion of greater diameter, the cylinder having an exhaust opening adjacent the lower end of its cylinder portion of less diameter, and having an inlet opening in the cylindrical wall of said cylinder portion of less diameter and at some distance below said charge chamber and above said exhaust opening, the reduced head of said piston having inlet and exhaust openings which in the extreme upper position of said piston register with said opening leading from said charge chamber and said exhaust opening of said cylinder, a second piston working within the reduced head of said first-named piston and moving lengthwise of said first-named piston in an opposite direction thereto, and a valve-controlled gas inlet connection interposed in said pipe.

In testimony whereof I have hereunto set my hand in presence of two subscribing witnesses.

THOMAS DANIEL KELLY.

Witnesses:
WM. O. BROWN,
FRED HUTCHINS.