US011346584B2

(12) United States Patent
Kozasa

(10) **Patent No.: US 11,346,584 B2**
(45) **Date of Patent: May 31, 2022**

(54) **REFRIGERANT EVAPORATOR AND METHOD FOR MANUFACTURING SAME**

(71) Applicant: **DENSO CORPORATION**, Kariya (JP)

(72) Inventor: **Tetsuo Kozasa**, Kariya (JP)

(73) Assignee: **DENSO CORPORATION**, Kariya (JP)

(*) Notice: Subject to any disclaimer, the term of this patent is extended or adjusted under 35 U.S.C. 154(b) by 152 days.

(21) Appl. No.: **16/654,086**

(22) Filed: **Oct. 16, 2019**

(65) **Prior Publication Data**

US 2020/0049382 A1 Feb. 13, 2020

Related U.S. Application Data

(63) Continuation of application No. PCT/JP2018/015659, filed on Apr. 16, 2018.

(30) **Foreign Application Priority Data**

May 10, 2017 (JP) JP2017-094153

(51) **Int. Cl.**

F25B 41/00	(2021.01)
F25B 5/04	(2006.01)
F25B 39/02	(2006.01)

(52) **U.S. Cl.**
CPC ***F25B 5/04*** (2013.01); ***F25B 39/024*** (2013.01); ***F25B 39/028*** (2013.01)

(58) **Field of Classification Search**
CPC F28D 1/05391; F28D 1/0417; F28D 2021/0085; F25B 5/04; F25B 39/02; F25B 39/024; F25B 39/028; F28F 1/022; F28F 1/126; F28F 17/005; F28F 9/0217; F28F 2009/224
USPC 62/513
See application file for complete search history.

(56) **References Cited**

U.S. PATENT DOCUMENTS

9,625,214	B2 *	4/2017	Katoh	B60H 1/00342
2004/0206490	A1 *	10/2004	Katoh	F28F 9/22 165/174
2005/0006073	A1	1/2005	Demuth et al.	
2005/0039901	A1	2/2005	Demuth et al.	

(Continued)

FOREIGN PATENT DOCUMENTS

DE	4446817 C2	4/2003
JP	2004163036 A	6/2004

(Continued)

Primary Examiner — Henry T Crenshaw
Assistant Examiner — Kamran Tavakoldavani
(74) *Attorney, Agent, or Firm* — Harness, Dickey & Pierce, P.L.C.

(57) **ABSTRACT**

A refrigerant evaporator includes a first core, a second core, a first plate, and a second plate. The first core and the second core respectively include a plurality of first tubes and a plurality of second tubes extending along a tube longitudinal direction and stacked along a tube stacking direction. The first plate houses one end portions of the first tubes and the second tubes. The second plate faces the first core and the second core across the first plate and is joined to the first plate in the tube longitudinal direction. The second plate includes a plurality of ribs. The ribs and the first plate define a plurality of intermediate passageways therein. Each of the intermediate passageways allows communication between a corresponding one of the first tubes and a corresponding one of the second tubes.

13 Claims, 16 Drawing Sheets

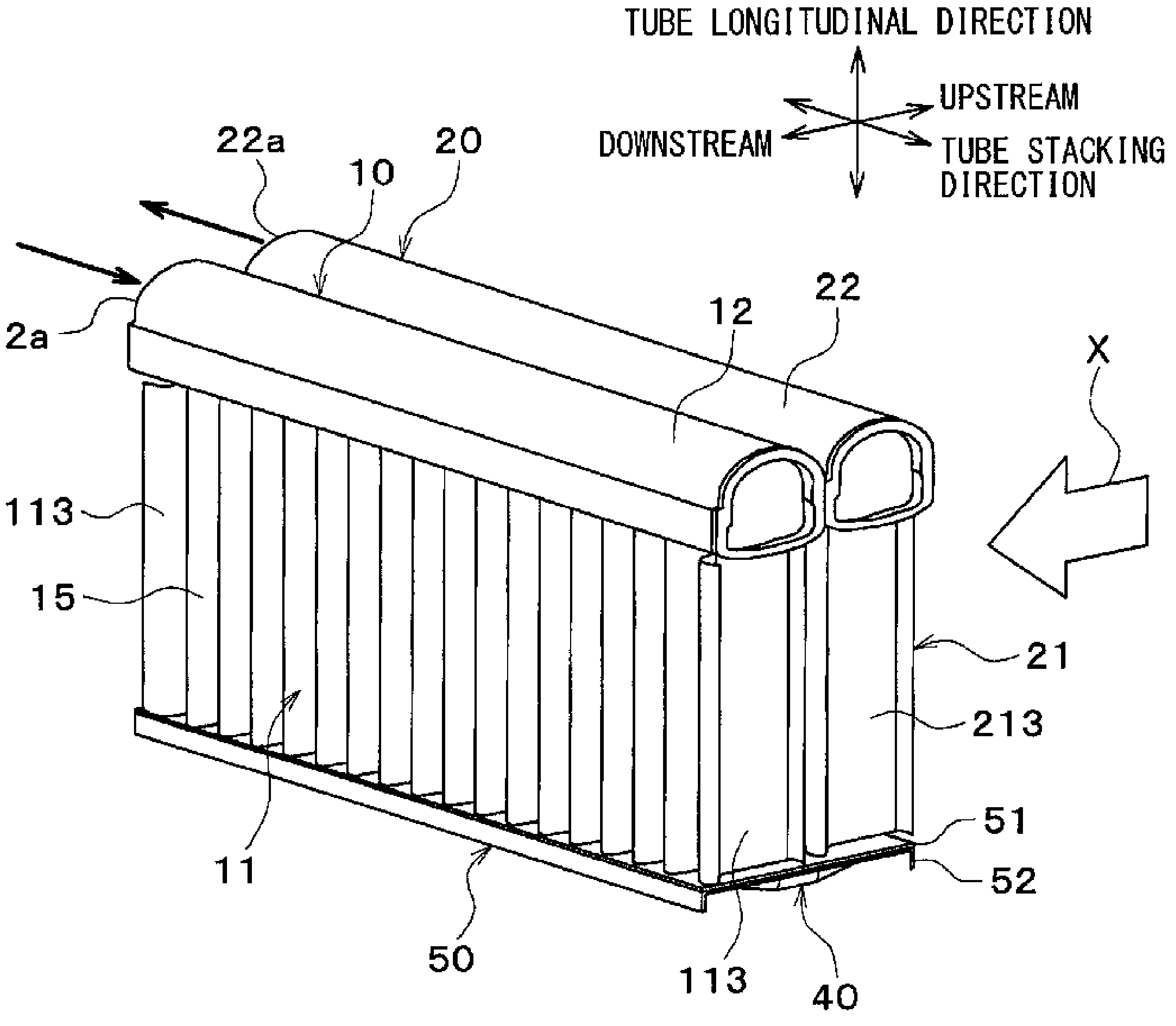

(56) References Cited

U.S. PATENT DOCUMENTS

2005/0103486	A1 *	5/2005	Demuth	F28D 1/05391 165/174
2005/0217838	A1	10/2005	Katoh et al.	
2009/0126920	A1	5/2009	Demuth et al.	
2009/0166017	A1 *	7/2009	Katoh	F28F 9/001 165/153
2011/0240271	A1	10/2011	Mross et al.	

FOREIGN PATENT DOCUMENTS

JP	2005513403	A	5/2005
JP	2005283018	A	10/2005
JP	2007057176	A	3/2007
JP	2008025956	A	2/2008
JP	4124136	B2	7/2008
JP	2009014282	A	1/2009
JP	2009275956	A	11/2009
JP	2011214827	A	10/2011
JP	2016130612	A	7/2016
WO	WO-2015/189990	A1	12/2015

* cited by examiner

FIG. 1

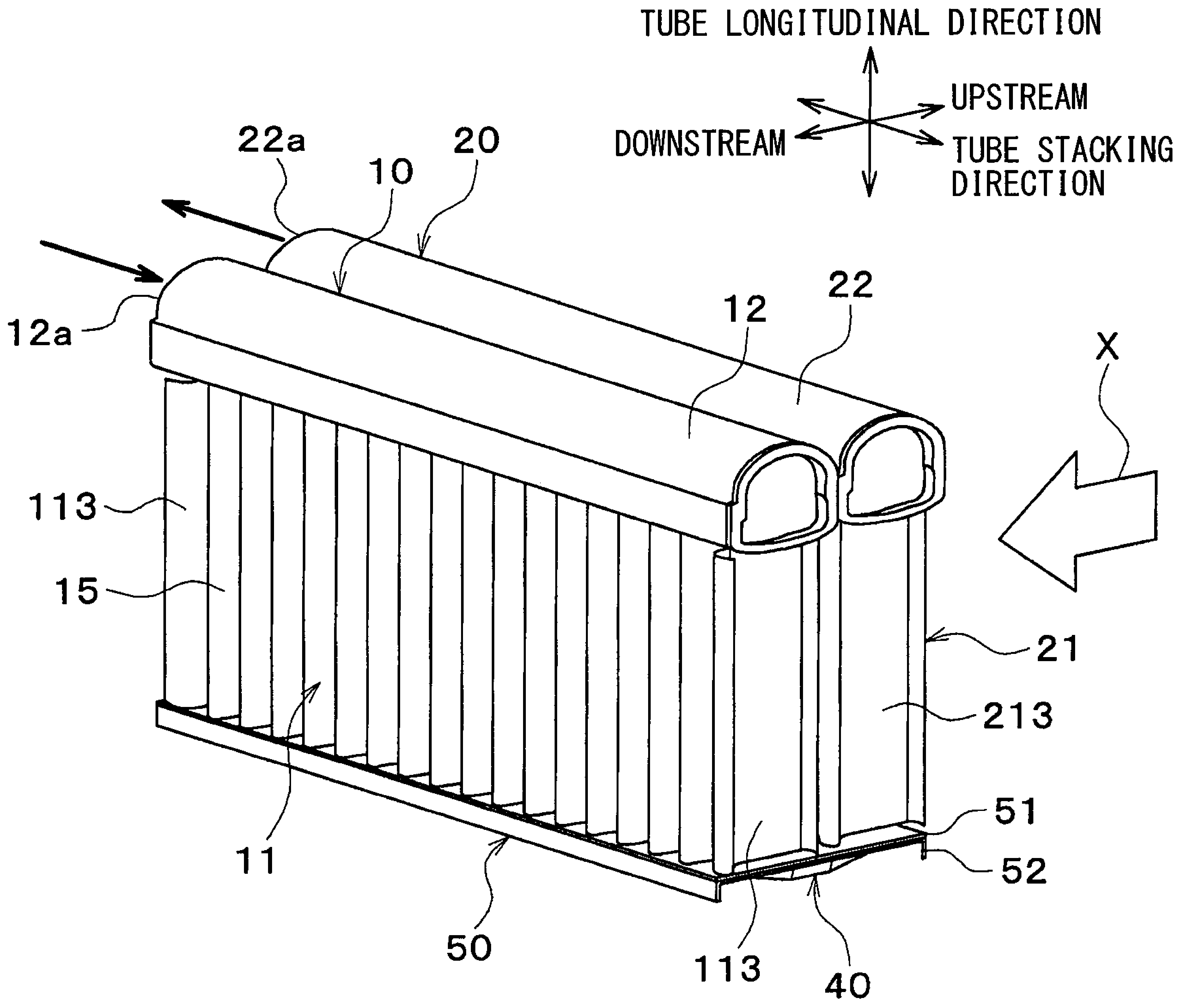
TUBE LONGITUDINAL DIRECTION
UPSTREAM
DOWNSTREAM
TUBE STACKING DIRECTION
22a
10
20
12a
12
22
X
113
15
21
213
51
52
11
50
113
40

FIG. 2

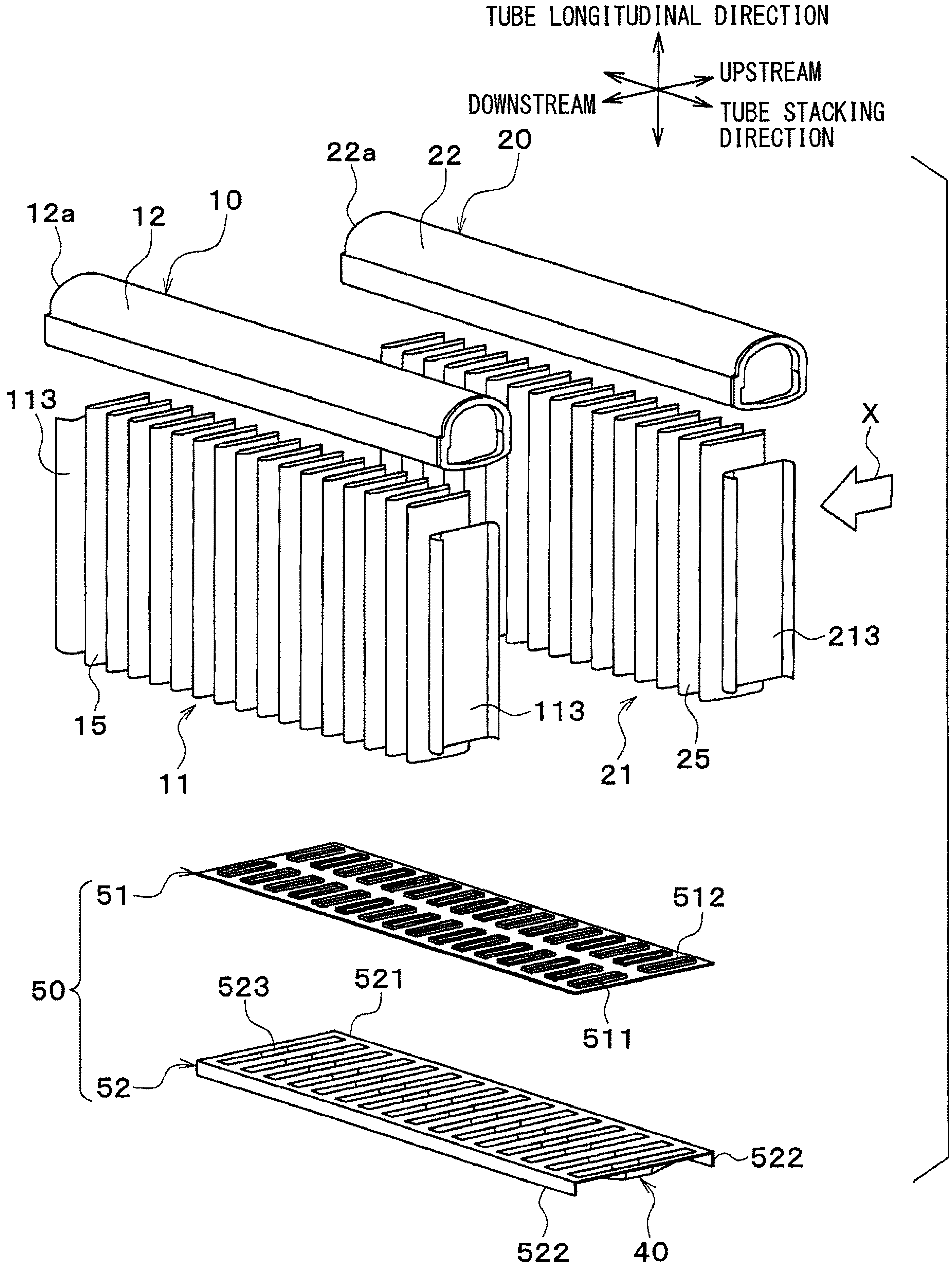
TUBE LONGITUDINAL DIRECTION
UPSTREAM
DOWNSTREAM
TUBE STACKING DIRECTION
22a
22
20
12a
12
10
113
X
213
113
15
11
21
25
51
512
50
523
521
511
52
522
522
40

FIG. 3

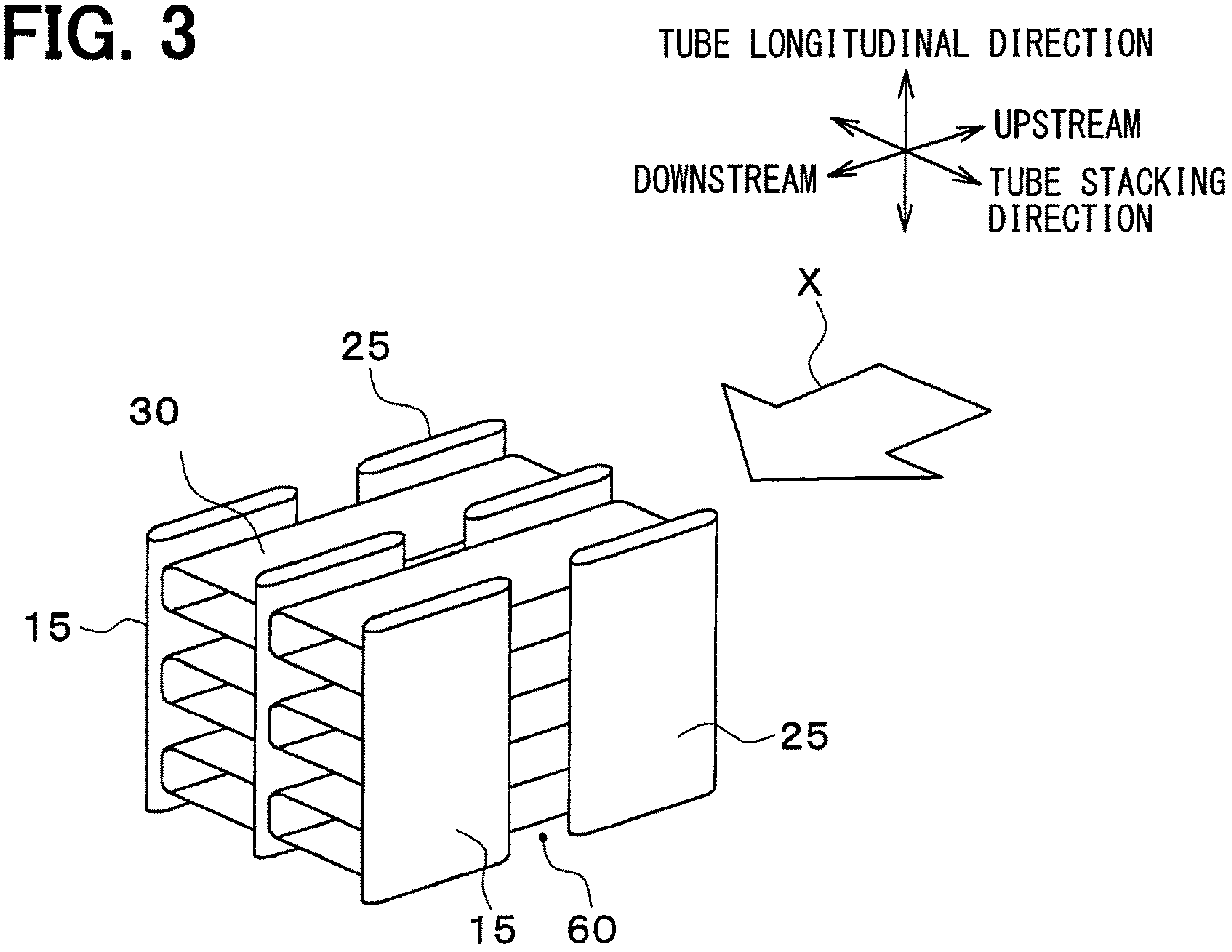
TUBE LONGITUDINAL DIRECTION
UPSTREAM
DOWNSTREAM
TUBE STACKING DIRECTION
X
25
30
15
25
15
60

FIG. 4

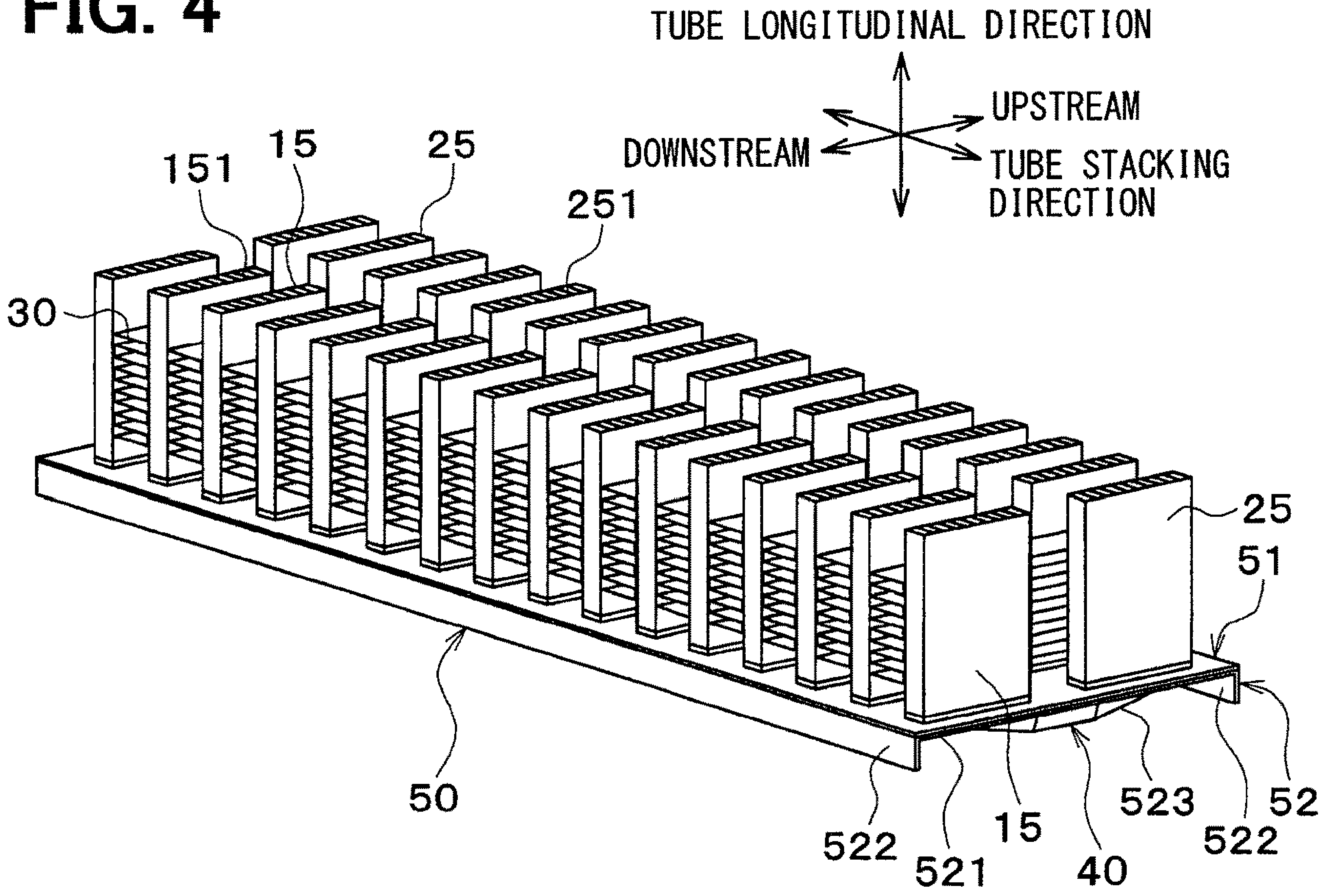
TUBE LONGITUDINAL DIRECTION
UPSTREAM
DOWNSTREAM
TUBE STACKING DIRECTION
151
15
25
251
30
25
51
50
522
521
15
40
523
522
52

FIG. 5

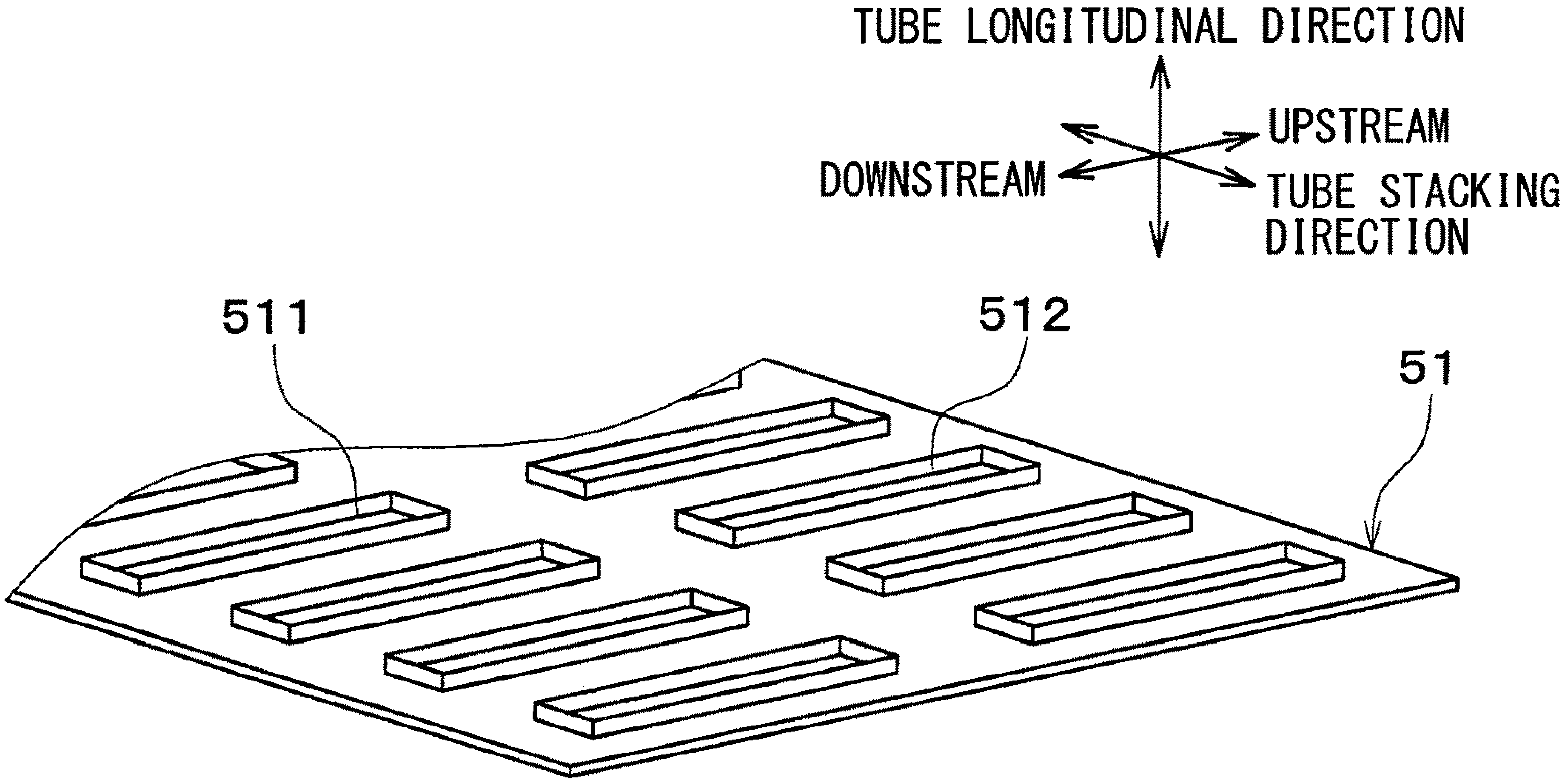
TUBE LONGITUDINAL DIRECTION
UPSTREAM
DOWNSTREAM
TUBE STACKING DIRECTION
511
512
51

FIG. 6

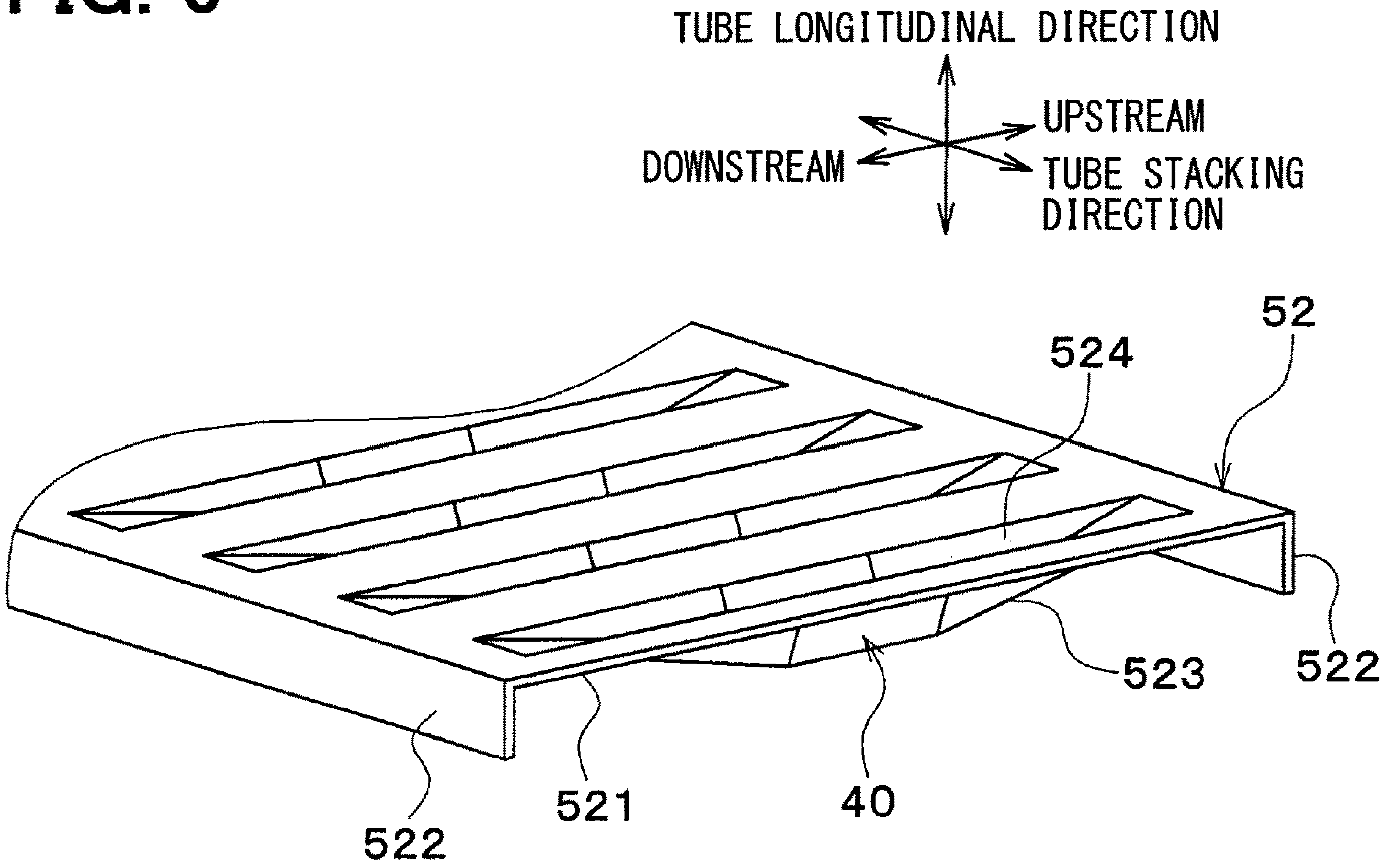
TUBE LONGITUDINAL DIRECTION
UPSTREAM
DOWNSTREAM
TUBE STACKING DIRECTION
52
524
523
522
522
521
40

FIG. 7

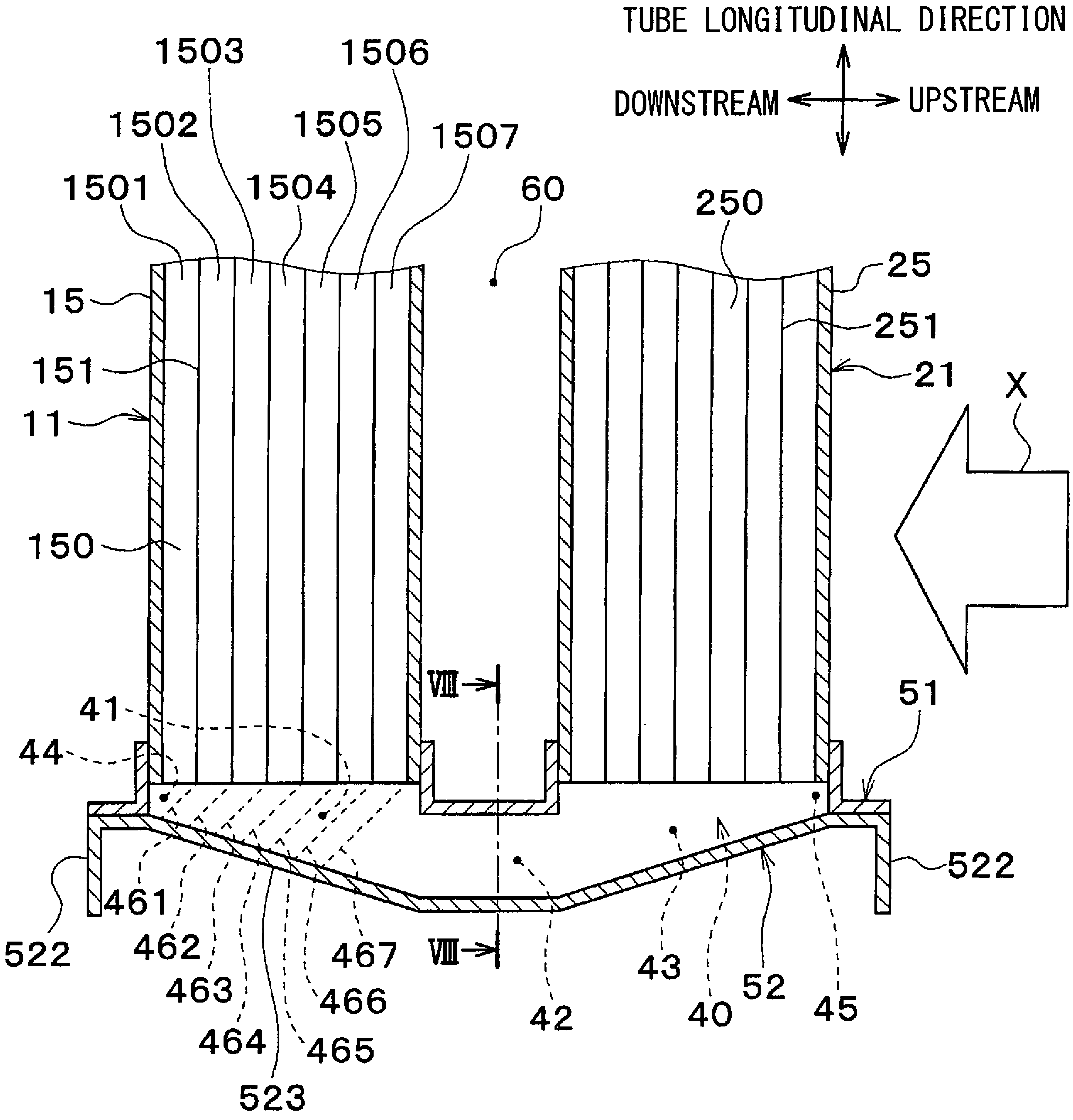
TUBE LONGITUDINAL DIRECTION
DOWNSTREAM
UPSTREAM
1503
1506
1502
1505
1507
1501
1504
60
250
25
15
251
151
21
X
11
150
VIII
41
51
44
522
461
462
467
VIII
463
466
464
465
523
42
43
40
52
45
522

FIG. 8

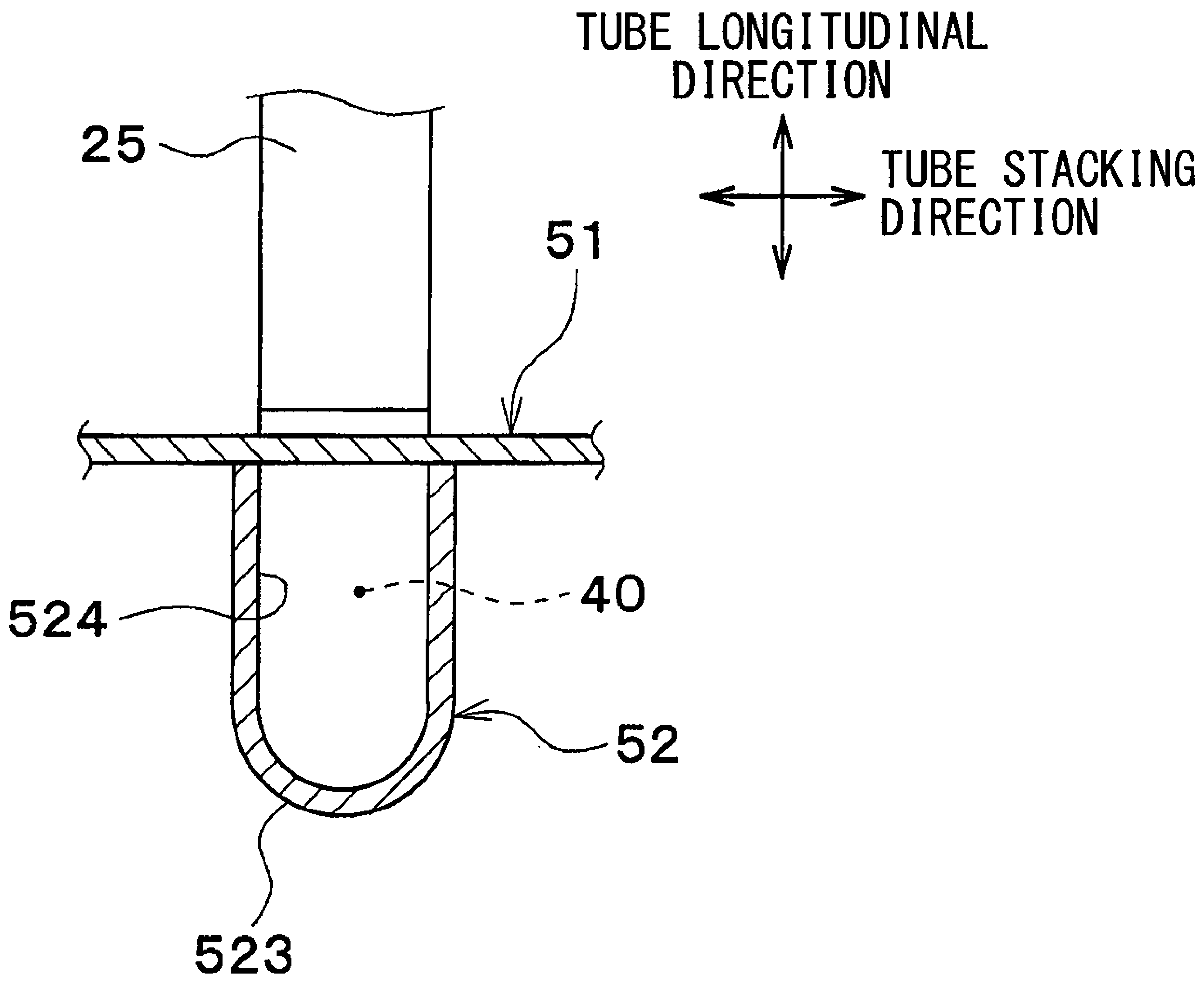
TUBE LONGITUDINAL DIRECTION
TUBE STACKING DIRECTION
25
51
524
40
52
523

FIG. 9

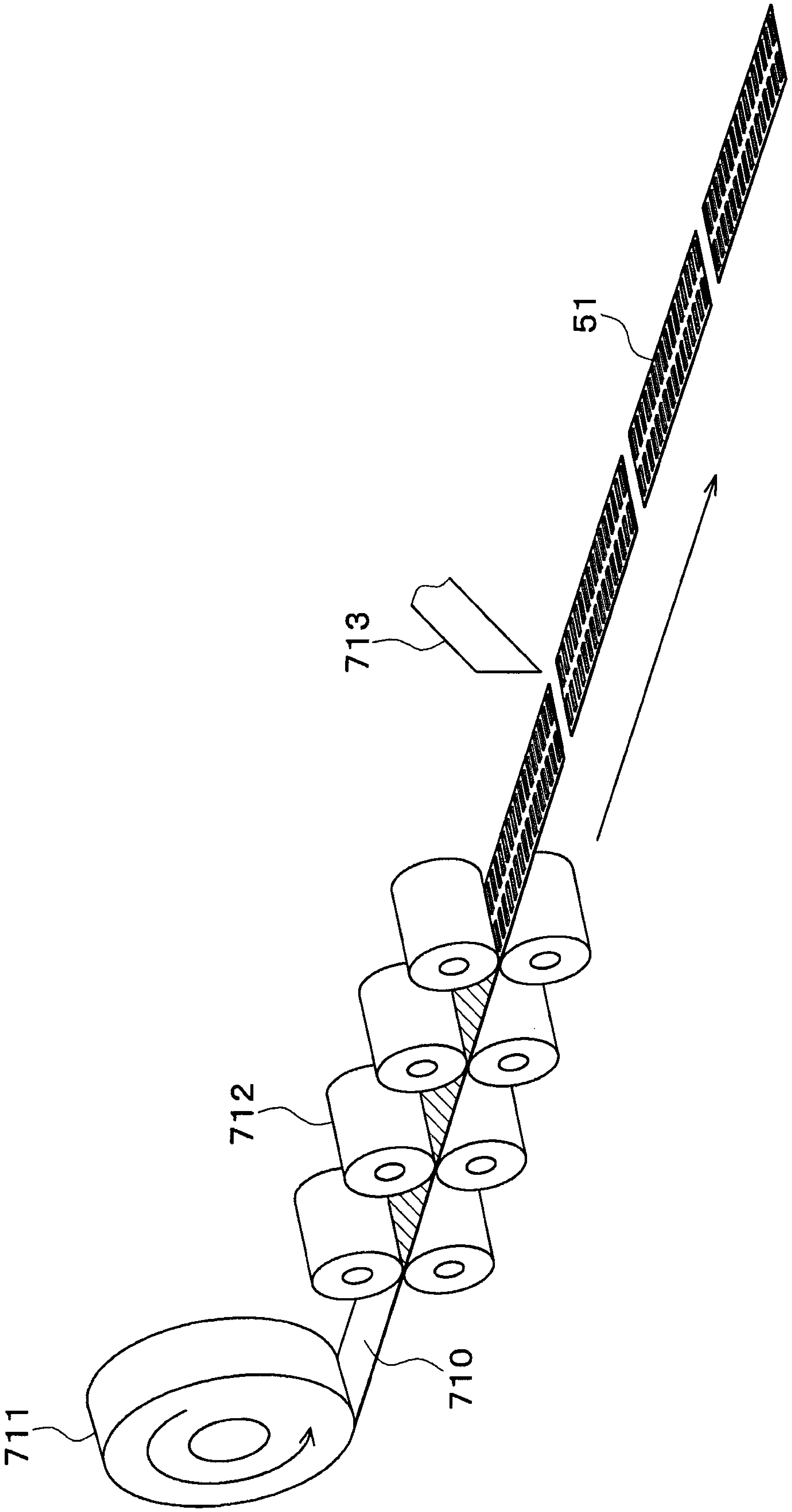

FIG. 10

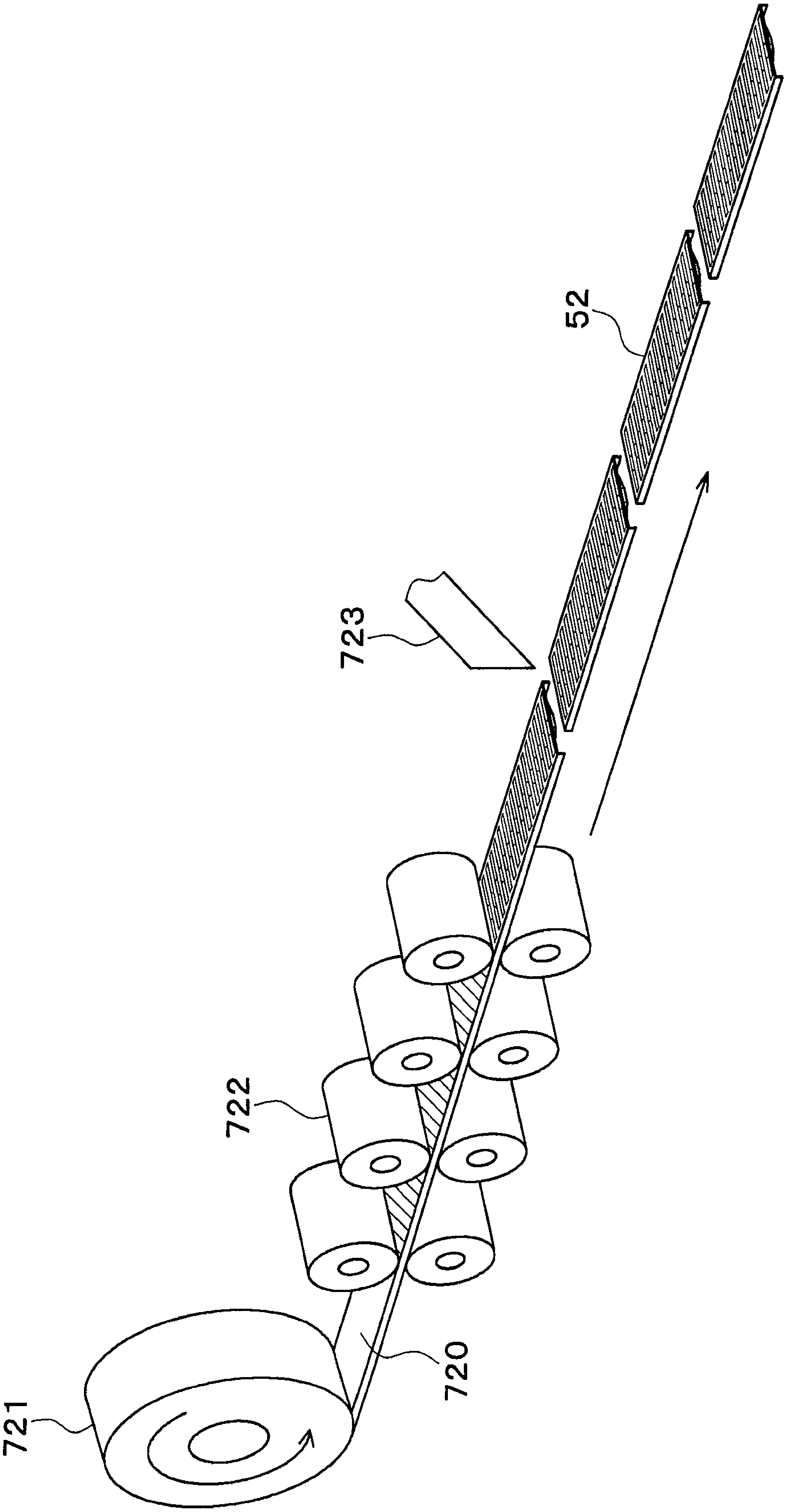

FIG. 11

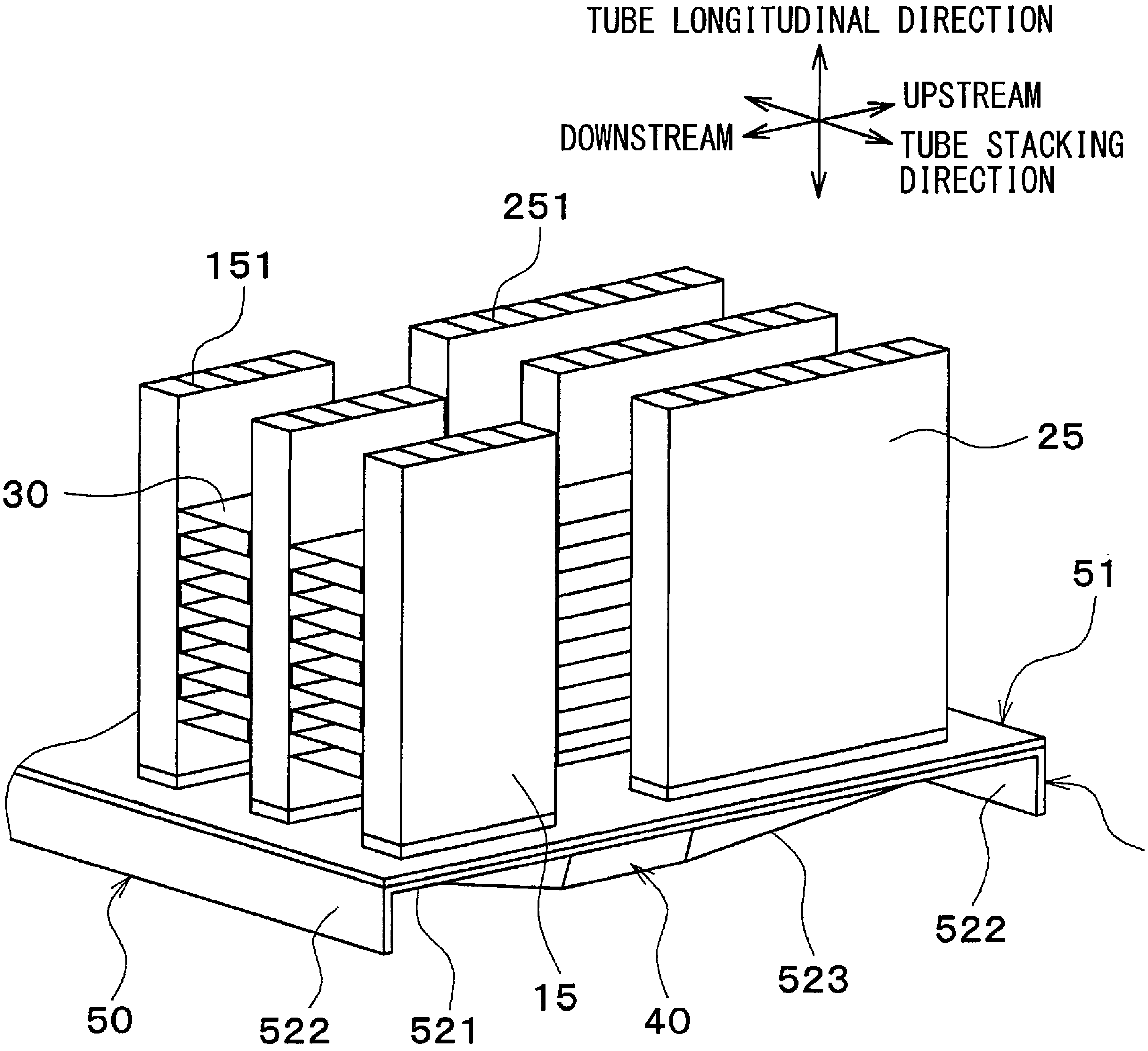
TUBE LONGITUDINAL DIRECTION
UPSTREAM
DOWNSTREAM
TUBE STACKING DIRECTION
251
151
25
30
51
52
522
523
50
522
521
15
40

FIG. 12

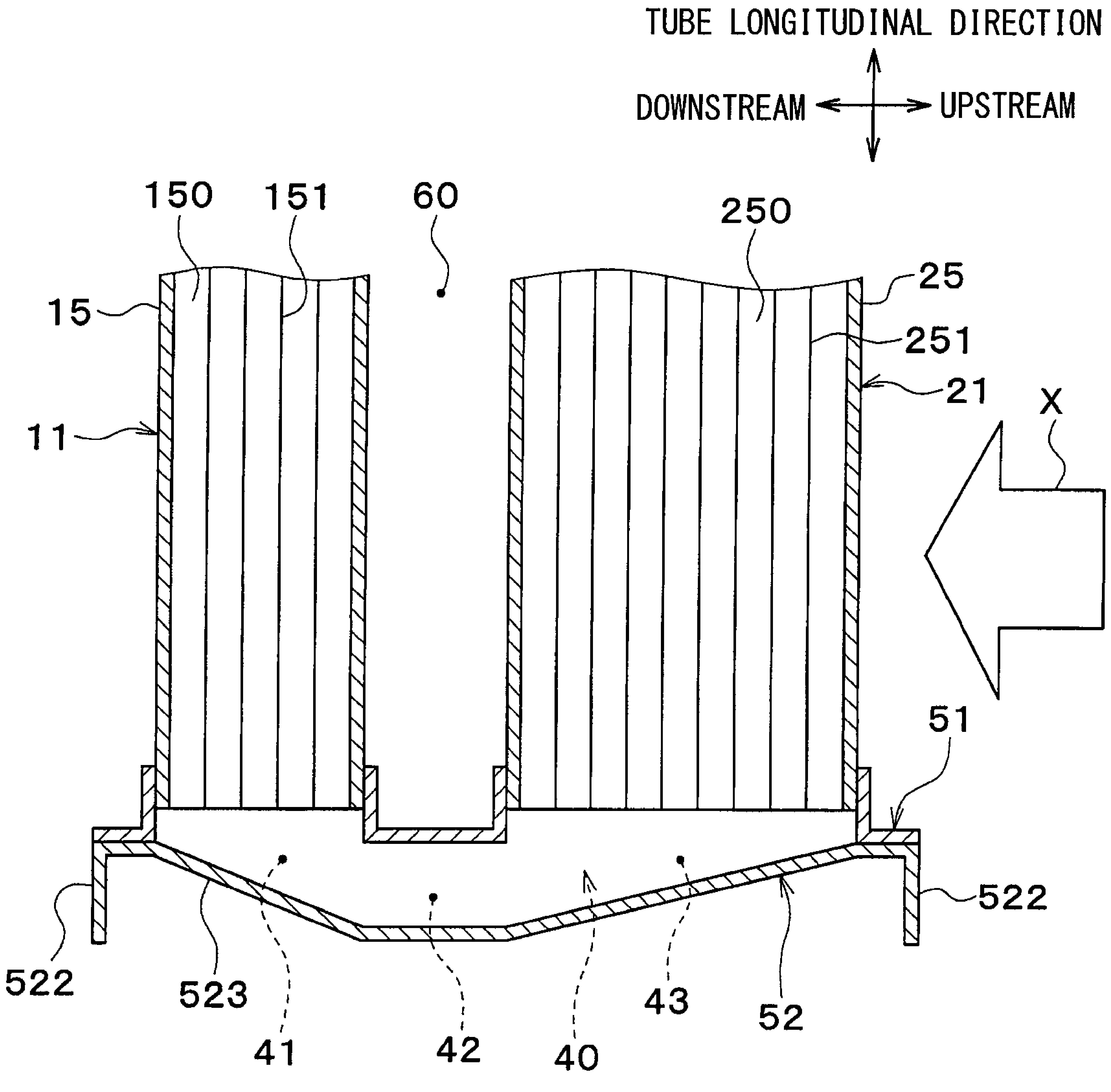
TUBE LONGITUDINAL DIRECTION
DOWNSTREAM
UPSTREAM
150
151
60
250
25
15
251
21
11
X
51
522
522
523
41
42
40
43
52

FIG. 13

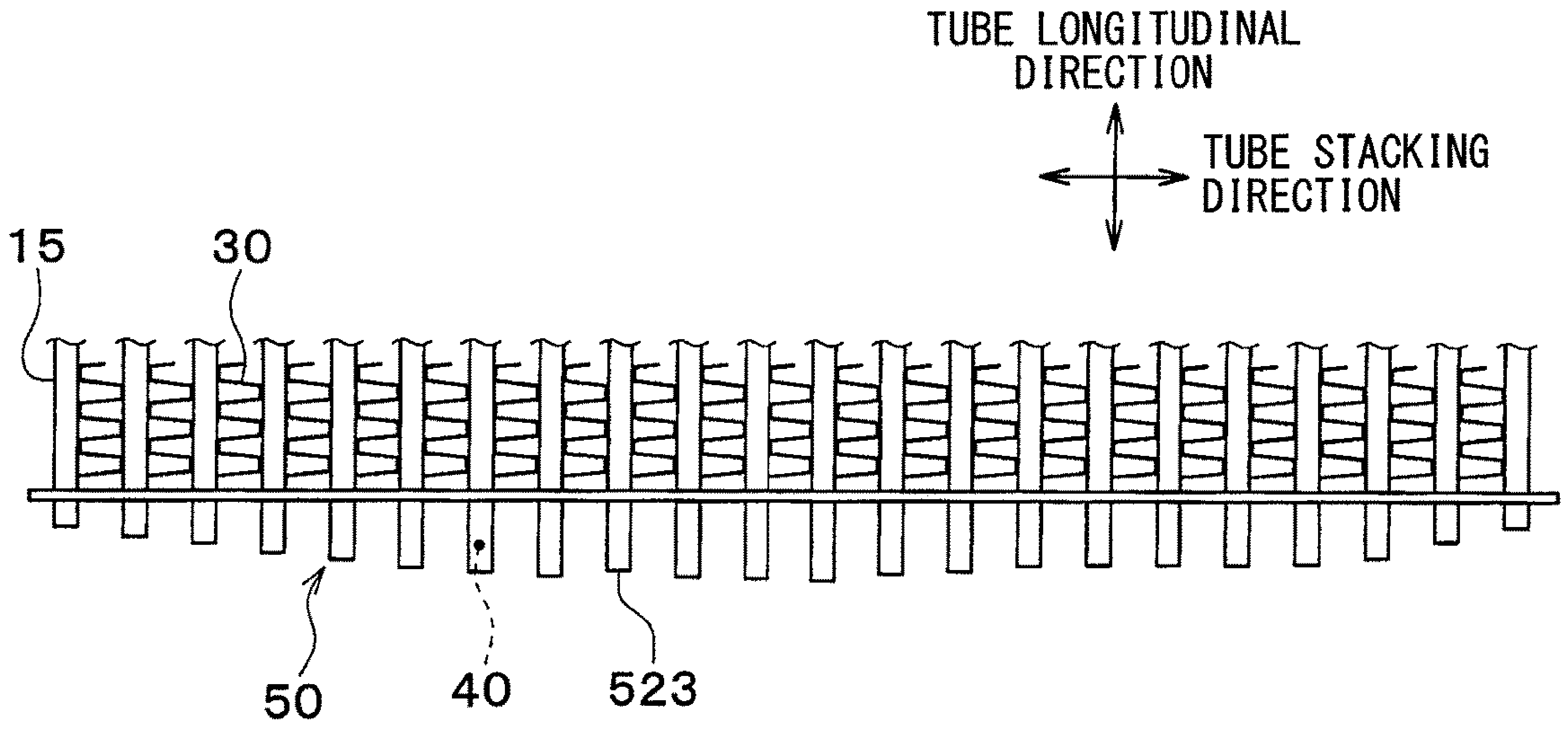
TUBE LONGITUDINAL DIRECTION
TUBE STACKING DIRECTION
15
30
50
40
523

FIG. 14

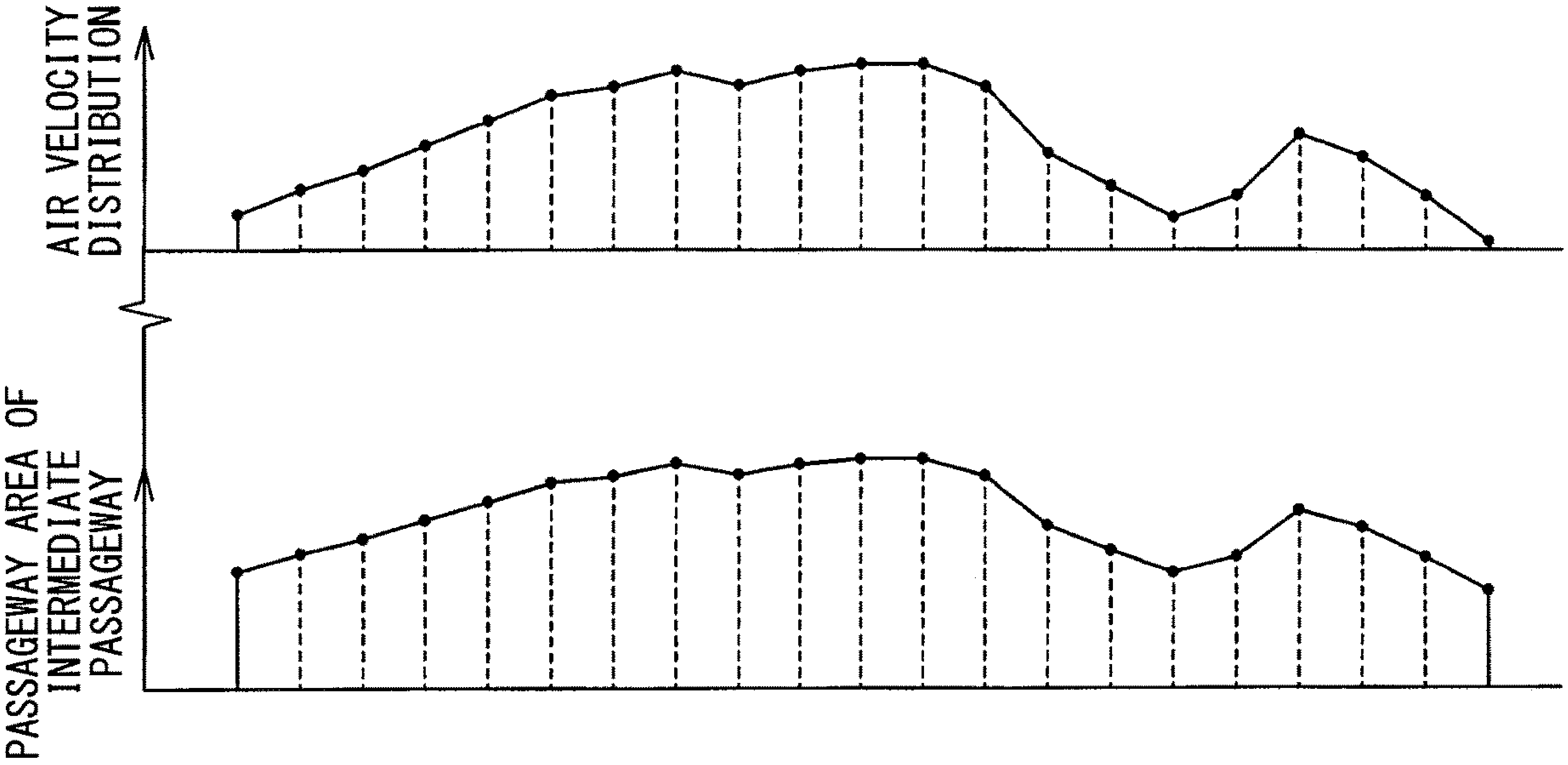
AIR VELOCITY DISTRIBUTION
PASSAGEWAY AREA OF INTERMEDIATE PASSAGEWAY

FIG. 15

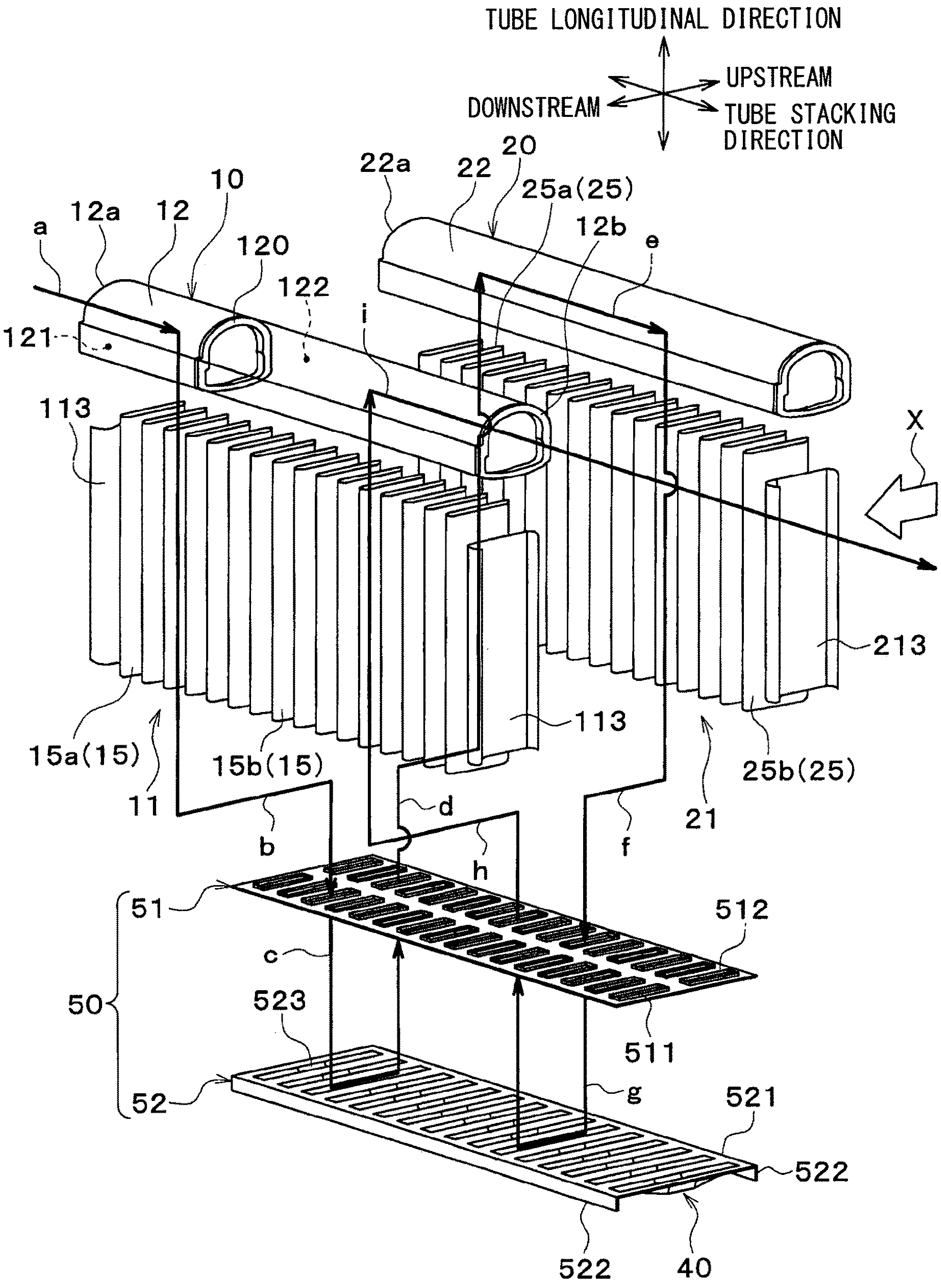
TUBE LONGITUDINAL DIRECTION
UPSTREAM
DOWNSTREAM
TUBE STACKING DIRECTION
20
22a
22
25a(25)
10
12a
12
12b
e
a
120
122
i
121
113
X
213
113
15a(15)
15b(15)
25b(25)
11
d
21
b
h
f
51
512
c
50
523
511
g
52
521
522
522
40

FIG. 16

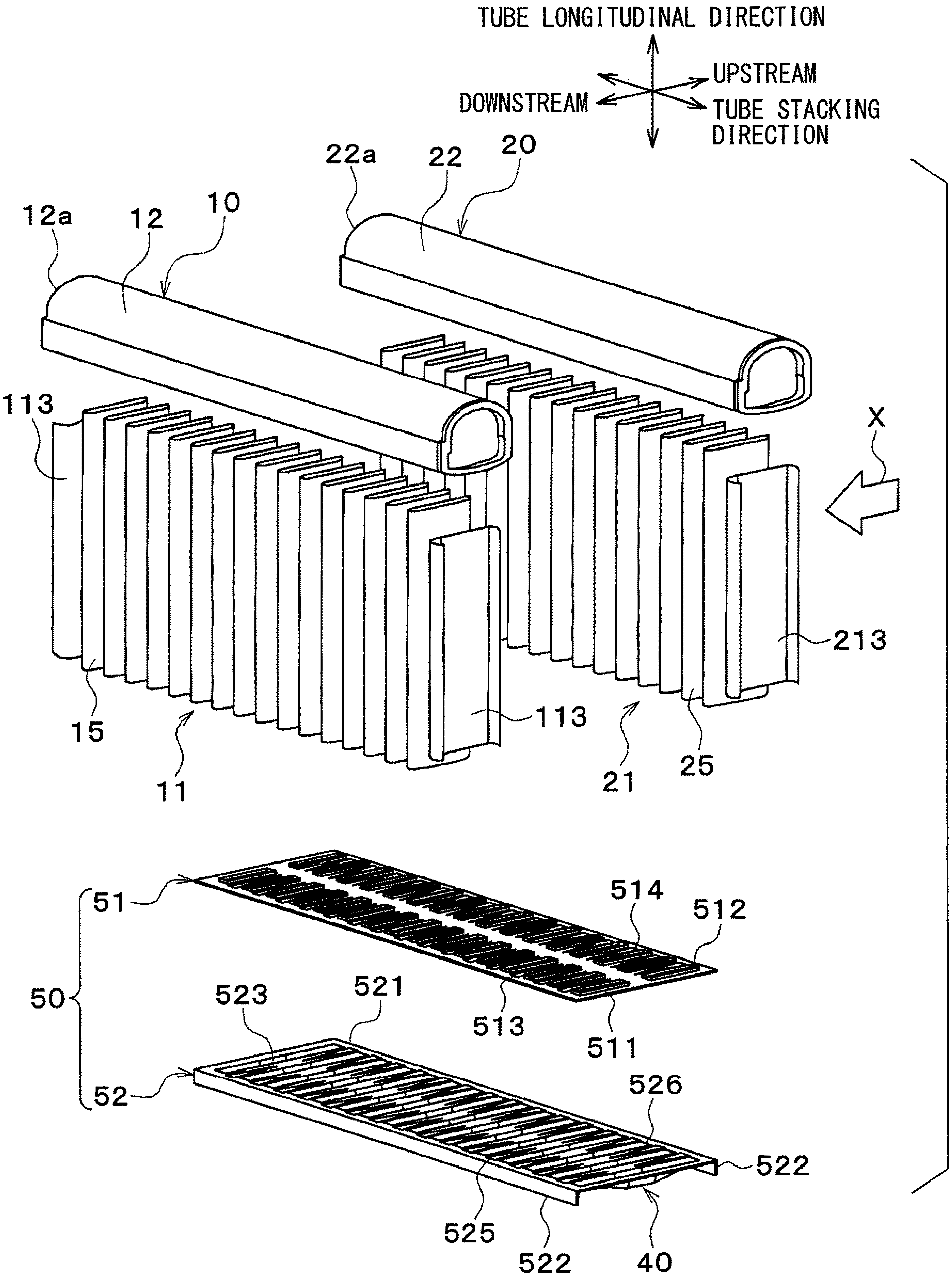
TUBE LONGITUDINAL DIRECTION
UPSTREAM
DOWNSTREAM
TUBE STACKING DIRECTION
22a
22
20
12a
12
10
113
X
213
113
15
11
21
25
51
514
512
50
523
521
513
511
52
526
522
525
522
40

FIG. 17

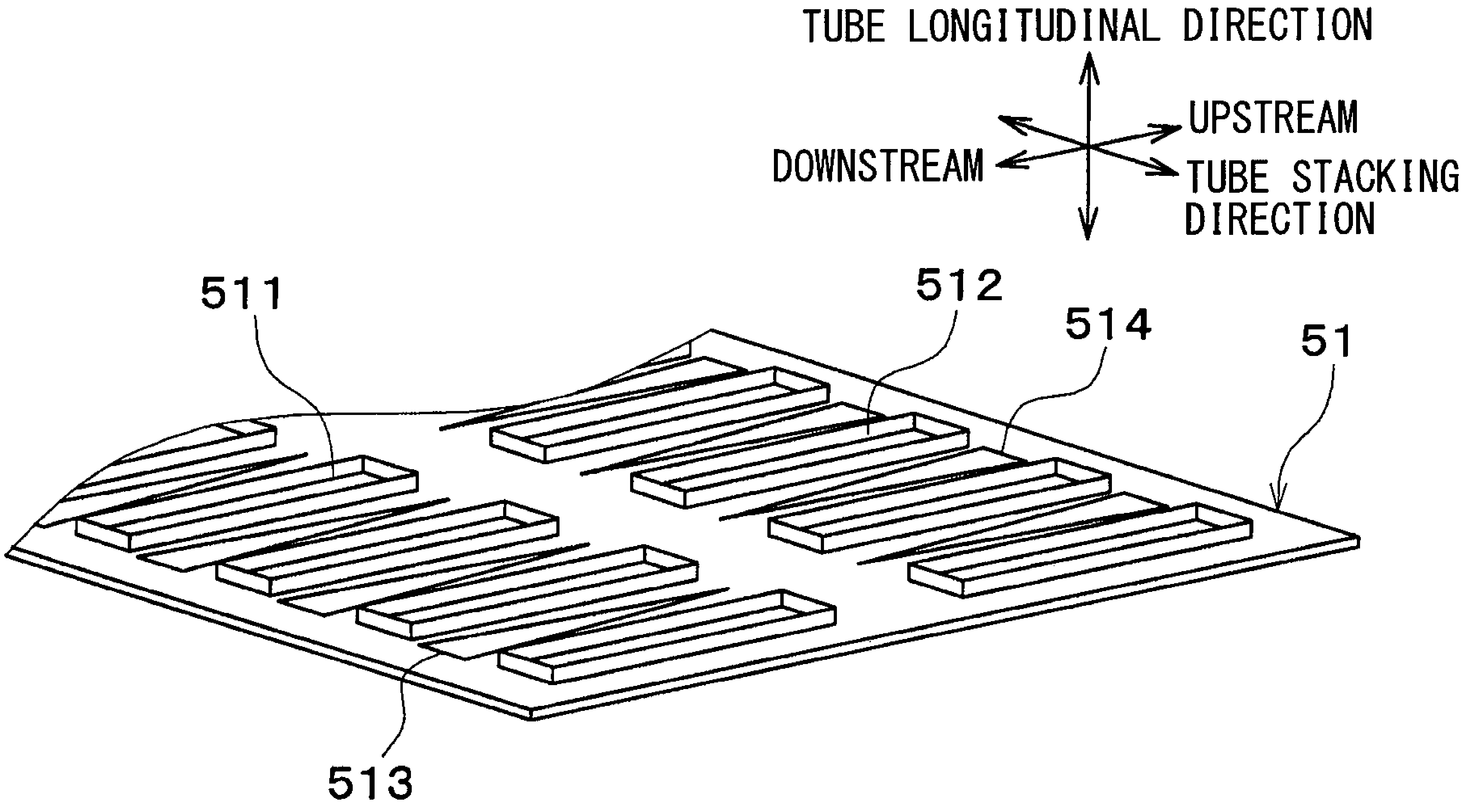
TUBE LONGITUDINAL DIRECTION
UPSTREAM
DOWNSTREAM
TUBE STACKING DIRECTION
511
512
514
51
513

FIG. 18

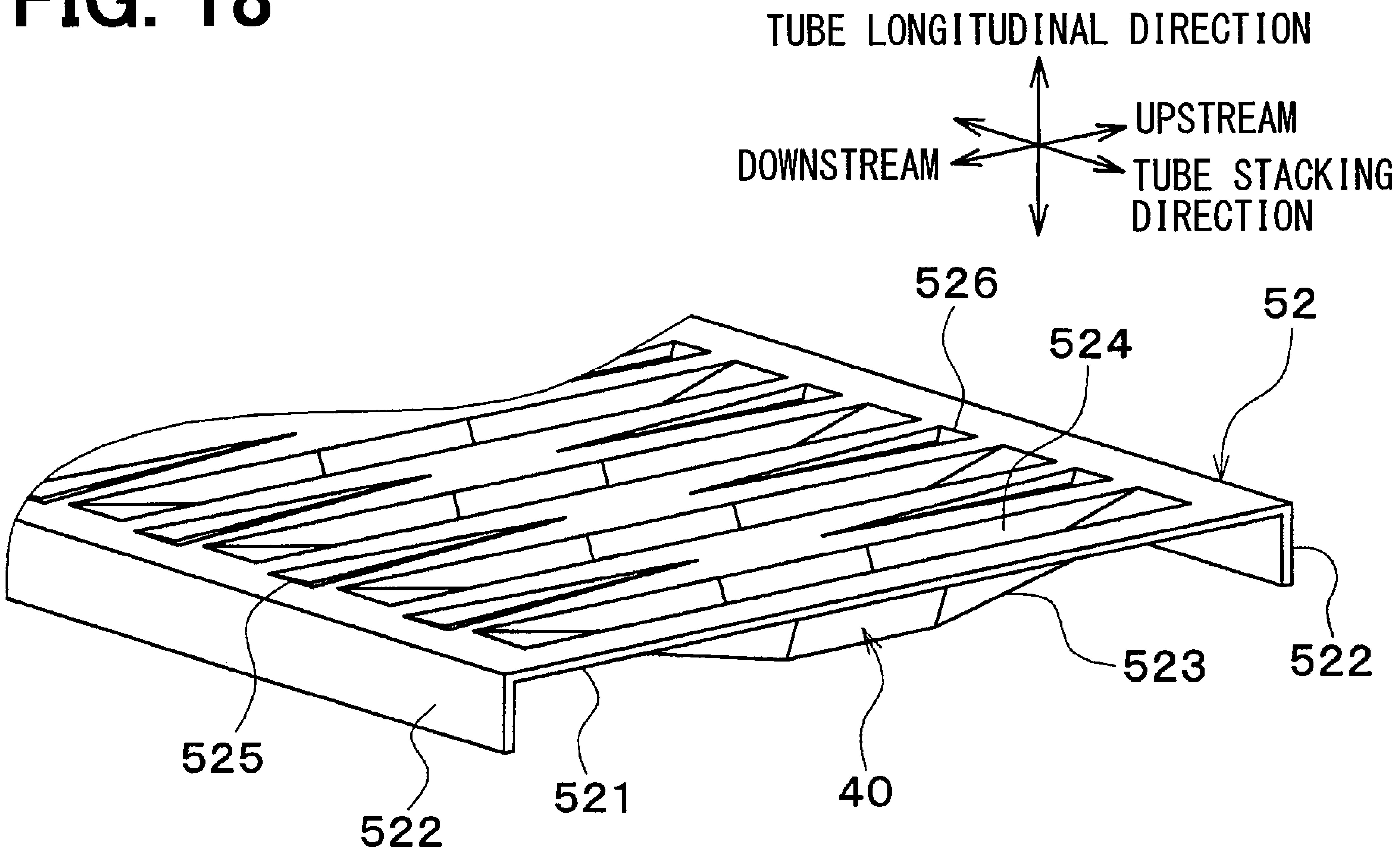
TUBE LONGITUDINAL DIRECTION
UPSTREAM
DOWNSTREAM
TUBE STACKING DIRECTION
526
524
52
523
522
525
522
521
40

FIG. 19

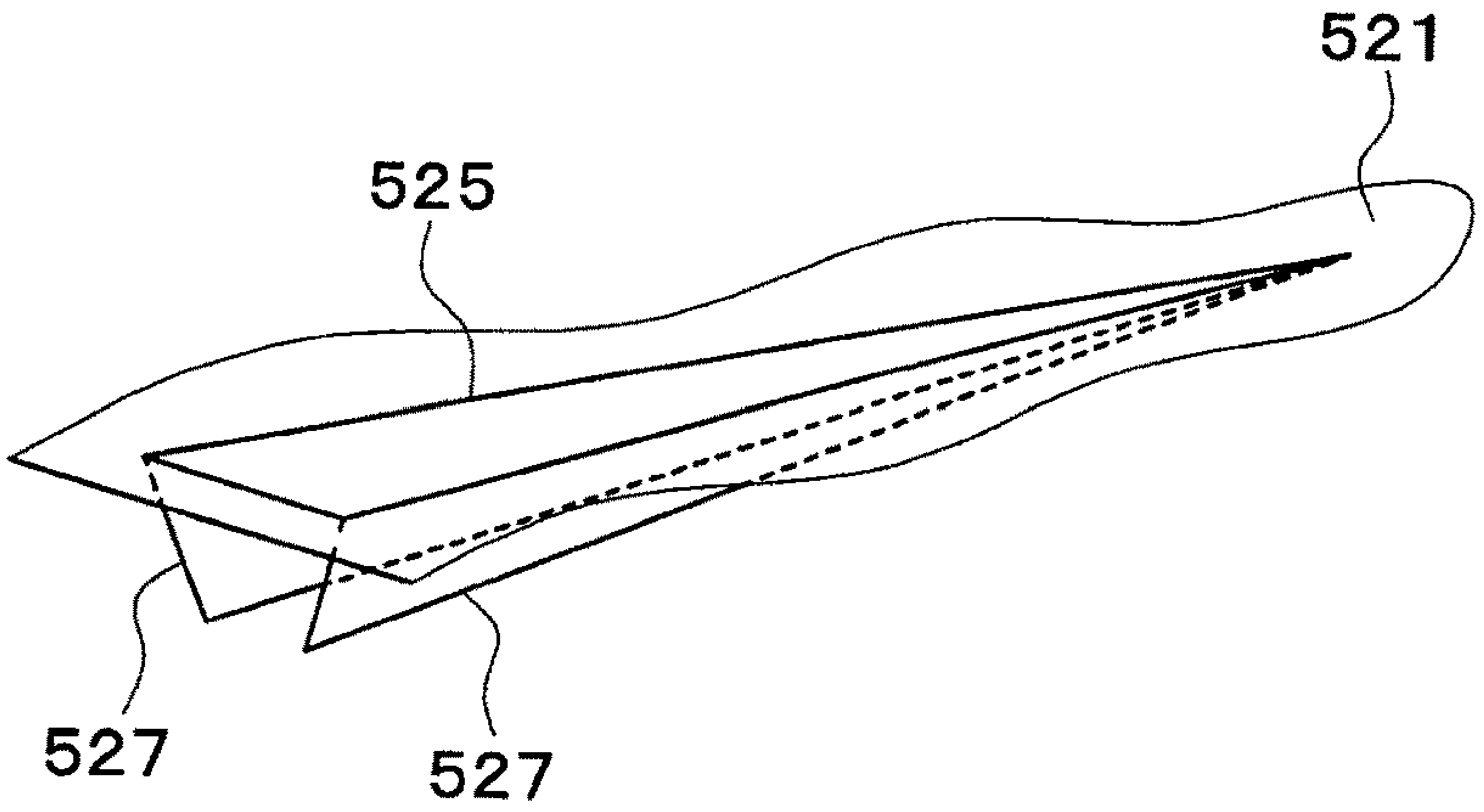
521
525
527
527

FIG. 20

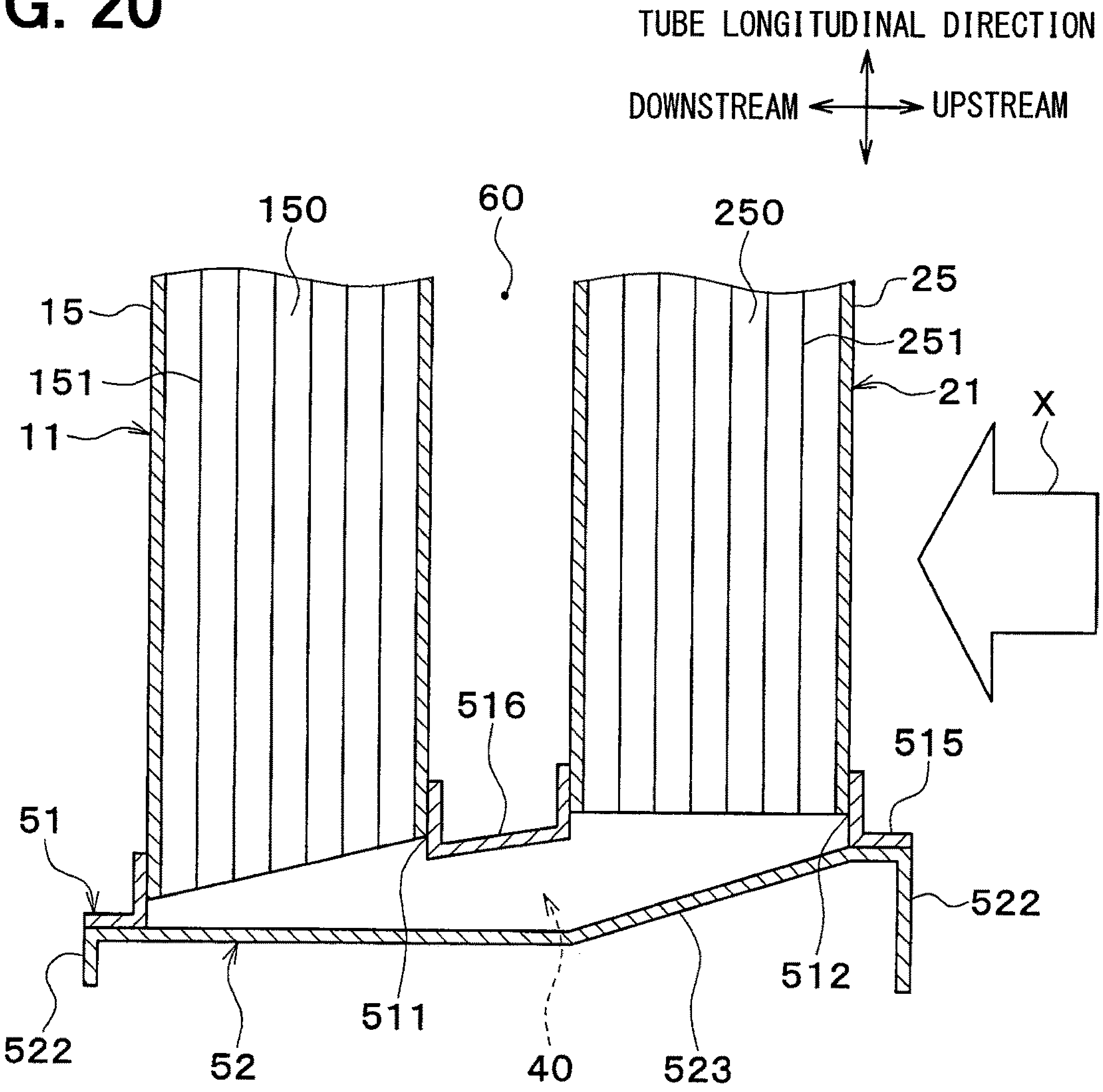
TUBE LONGITUDINAL DIRECTION
DOWNSTREAM
UPSTREAM
150
60
250
15
25
151
251
11
21
X
516
515
51
522
512
522
511
52
40
523

FIG. 21

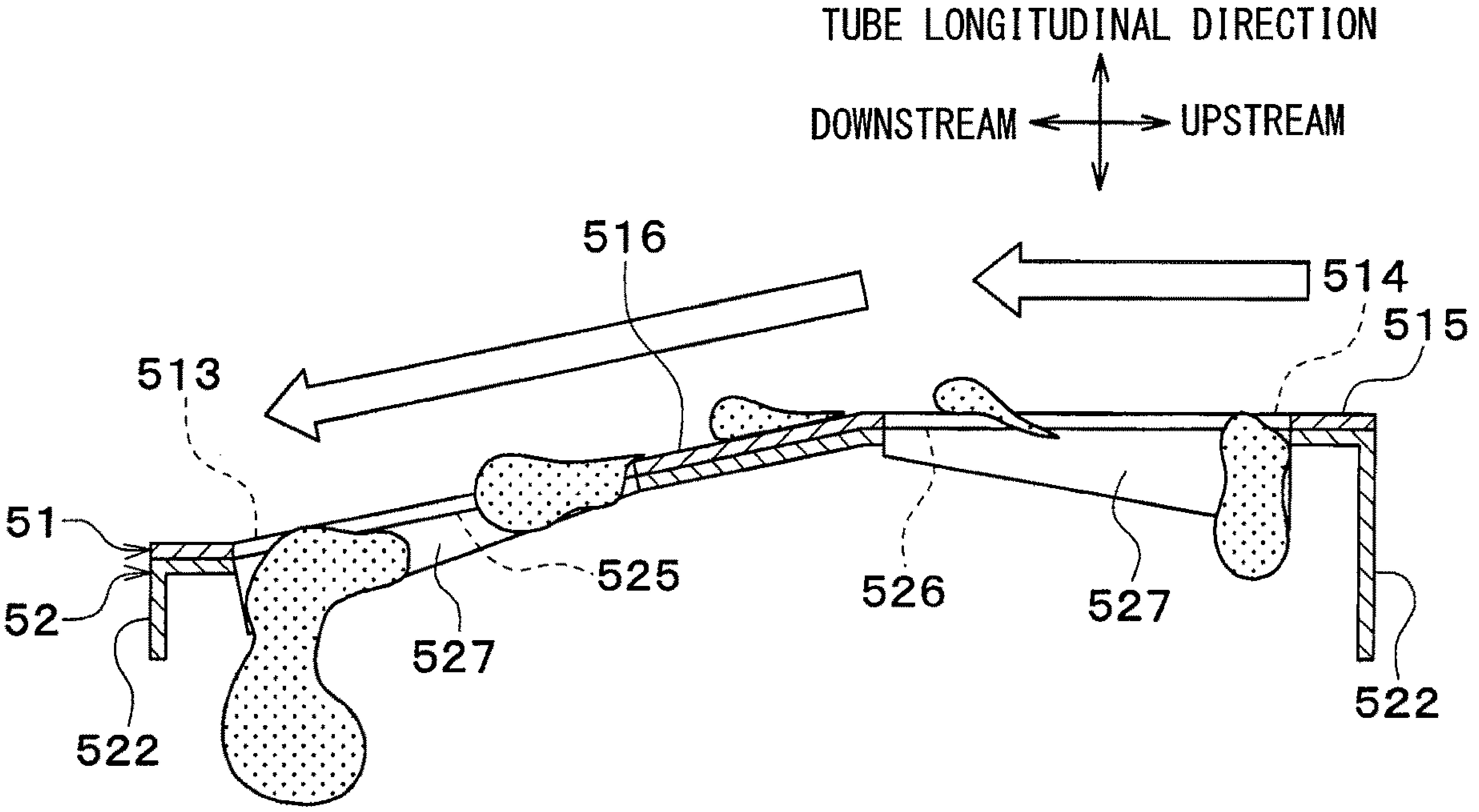
TUBE LONGITUDINAL DIRECTION
DOWNSTREAM
UPSTREAM
516
514
515
513
51
52
525
526
527
527
522
522

FIG. 22

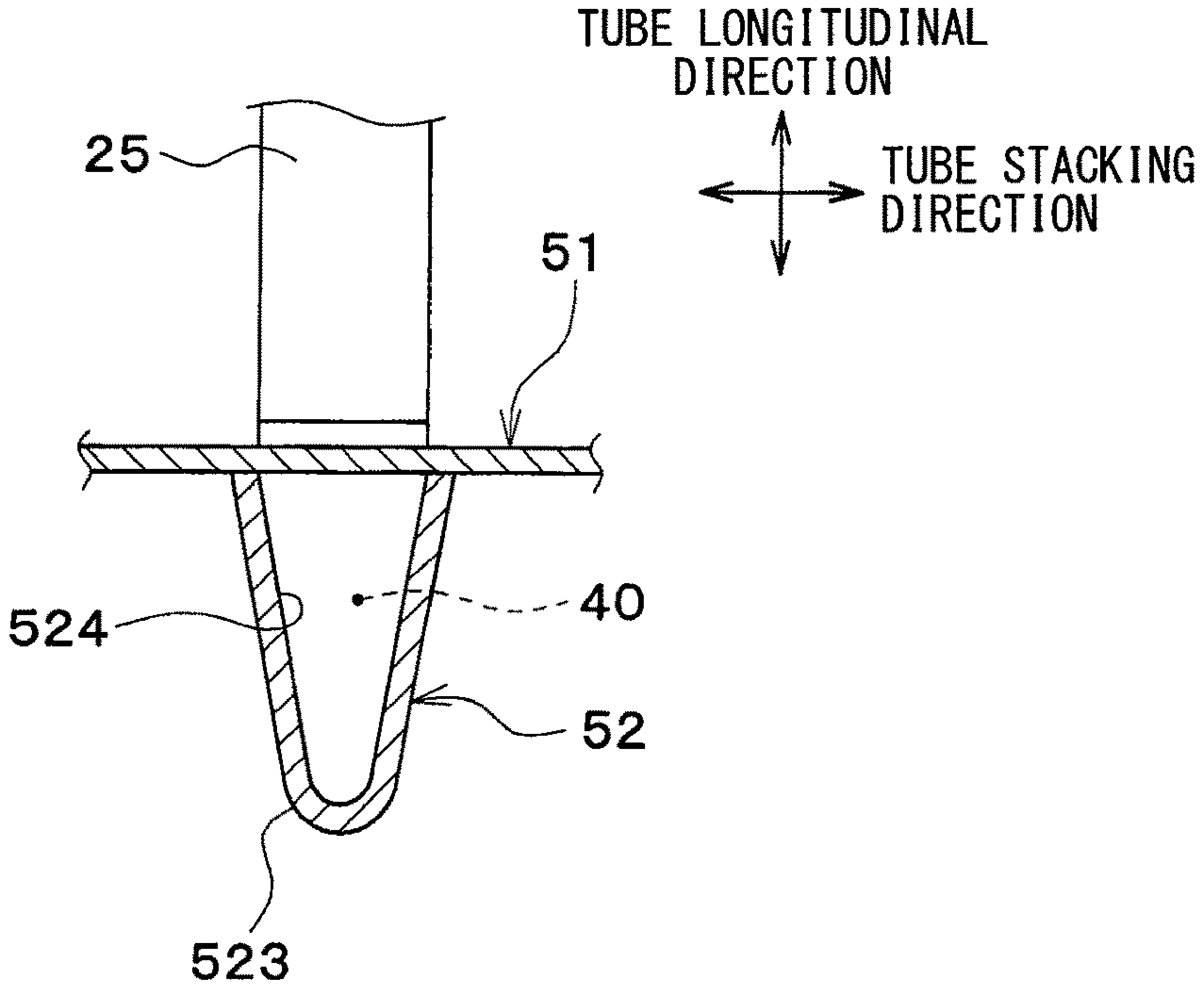
TUBE LONGITUDINAL DIRECTION
TUBE STACKING DIRECTION
25
51
524
40
52
523

REFRIGERANT EVAPORATOR AND METHOD FOR MANUFACTURING SAME

CROSS REFERENCE TO RELATED APPLICATIONS

This application is a continuation application of international Patent Application No. PCT/JP2018/015659 filed on Apr. 16, 2018, which designated the U.S. and claims the benefit of priority from Japanese Patent Application No. 2017-094153 filed on May 10, 2017. The entire disclosure of all of the above applications are incorporated herein by reference.

TECHNICAL FIELD

The present disclosure relates to a refrigerant evaporator that cools a cooling target fluid and a method for manufacturing the refrigerant evaporator.

BACKGROUND ART

Various types of conventional refrigerant evaporators for use in a refrigerating cycle of an air conditioning device have been proposed. Such refrigerant evaporators include at least two heat-exchange cores and an intermediate tank for collecting refrigerant from one of the heat-exchange cores and distributing refrigerant to the other one of the heat-exchange cores.

SUMMARY OF THE INVENTION

One aspect of the present disclosure is a refrigerant evaporator for heat exchange between fluid and refrigerant. The refrigerant evaporator includes a first evaporation unit, a second evaporation unit, a first core, a second core, a first plate, and a second plate. The first evaporation unit is configured to allow the fluid to flow therethrough in a flow direction. The second evaporation unit is configured to allow the fluid to flow therethrough in the flow direction. The second evaporation unit arranged in series with the first evaporation unit in the flow direction. The first core is included in the first evaporation unit and having a plurality of first tubes extending along a tube longitudinal direction perpendicular to the flow direction and stacked in a tube stacking direction perpendicular to both the flow direction and the tube longitudinal direction. The plurality of first tubes are configured to allow the refrigerant to flow therethrough. The second core is included in the second evaporation unit and having a plurality of second tubes extending along the tube longitudinal direction and stacked in the tube stacking direction, the second tubes being configured to allow the refrigerant to flow therethrough. The first plate is disposed on one side of the first and second cores in the tube longitudinal direction to be connected to one end portion of the first core and one end portion of the second core. The first plate houses one end portions of the first tubes and one end portions of the second tubes. The second plate faces the first core and the second core across the first plate and joined to the first plate in the tube longitudinal direction. The second plate includes a plurality of ribs protruding from the second plate along the tube longitudinal direction away from the first core and the second core and extending along the flow direction. The plurality of ribs define, together with the first plate, a plurality of intermediate passageways therein. Each of the plurality of first tubes is arranged to overlap with a respective one of the plurality of second tubes when viewed along the flow direction to form a pair of tubes facing each other along the flow direction. The pair of tubes are in fluid communication with each other through a corresponding one of the plurality of intermediate passageways.

BRIEF DESCRIPTION OF DRAWINGS

FIG. **1** is a perspective view of a refrigerant evaporator according to a first embodiment.

FIG. **2** is an exploded perspective view of FIG. **1**.

FIG. **3** is an enlarged perspective view of portions of a first core and a second core according to the first embodiment.

FIG. **4** is an enlarged perspective view of an intermediate tank and its vicinity in the first embodiment.

FIG. **5** is an enlarged perspective view of a first plate according to the first embodiment.

FIG. **6** is an enlarged perspective view of a second plate according to the first embodiment.

FIG. **7** is an enlarged sectional view of the intermediate tank and its vicinity in the first embodiment.

FIG. **8** is a sectional view along VIII-VIII in FIG. **7**.

FIG. **9** is a diagram for describing a manufacturing method for the first plate according to the first embodiment.

FIG. **10** is a diagram for describing a manufacturing method for the second plate according to the first embodiment.

FIG. **11** is an enlarged perspective view of a portion of a refrigerant evaporator according to a second embodiment.

FIG. **12** is an enlarged sectional view of an intermediate tank and its vicinity in the second embodiment.

FIG. **13** is an enlarged front view of a portion of a refrigerant evaporator according to a third embodiment.

FIG. **14** is a characteristic diagram indicating a relationship between an air velocity distribution and the sectional area of an intermediate passageway in the refrigerant evaporator.

FIG. **15** is an exploded perspective view of a refrigerant evaporator according to a fourth embodiment.

FIG. **16** is an exploded perspective view of a refrigerant evaporator according to a fifth embodiment.

FIG. **17** is an enlarged perspective view of a first plate according to the fifth embodiment.

FIG. **18** is an enlarged perspective view of a second plate according to the fifth embodiment.

FIG. **19** is an enlarged perspective view of a drain hole and its vicinity in the second plate according to the fifth embodiment.

FIG. **20** is an enlarged sectional view of an intermediate tank and its vicinity in a sixth embodiment.

FIG. **21** is a diagram for describing condensate water on the intermediate tank in the sixth embodiment.

FIG. **22** is an enlarged sectional view of an intermediate tank and its vicinity in another embodiment (2).

DESCRIPTION OF EMBODIMENTS

Some embodiments of the present disclosure are described below with reference to the drawings. In the following embodiments, identical or equivalent constituent elements are designated with identical symbols.

A refrigerant evaporator has multiple tubes through which refrigerant flows and which are placed in and joined to the intermediate tank of such refrigerant evaporators, thus increasing the internal volume of the intermediate tank. The refrigerant sectional area thus increases rapidly when refrigerant flows into the intermediate tank from the tubes of the one of the heat-exchange cores. The refrigerant sectional area decreases rapidly when refrigerant flows out from the intermediate tank into the other one of the heat-exchange cores.

Pressure loss thus increases at a refrigerant inflow portion from the tubes to the intermediate tank and at a refrigerant outflow portion from the intermediate tank to the tubes, especially in summer and other periods when the cooling thermal load increases, raising the refrigerant flow rate. The cooling performance of the air conditioning device may be thus degraded.

The intermediate tank has a substantially identical internal sectional area in a refrigerant flow direction (in a longitudinal direction of the intermediate tank), thus involving change in flow velocity of refrigerant in the process of collecting refrigerant from the tubes and in the process of distributing refrigerant to the tubes. The change in flow velocity of refrigerant causes change in static pressure applied to the inner wall surface of the intermediate tank in a manner dependent on the location in the longitudinal direction, leading to difference between pressures applied to the inlet and outlet of the tubes. The refrigerant distribution may be thus degraded.

To provide a solution, some refrigerant evaporators include two heat-exchange cores arranged in series with an airflow direction. The two heat-exchanger cores each include tubes that are arranged in a coincided manner when viewed from the airflow direction and are connected together by intermediate passageways.

Such intermediate passageways are configured by stacking three plate members, namely, a first plate member, a second plate member, and a third plate member. Specifically, the first plate member has tube insertion holes in which ends of the tubes are placed. The second plate member has through holes that communicate respectively with the tube insertion holes. The third plate member has a flat plate shape having no through holes. When these three plate members are stacked together, the through holes in the second plate member define the intermediate passageways.

In the refrigerant evaporator described above, a first heat-exchange core and a second heat-exchange core can be connected together by every pair of tubes that are arranged in the coincided manner when viewed from the airflow direction. An intermediate tank for collecting and distributing refrigerant from/to multiple tubes can be thus eliminated, which thereby lessens the probability of increasing pressure loss and degrading refrigerant distribution.

The refrigerant evaporator described above, however, may lead to an increased number of constituent elements because the intermediate tank is configured by using three plate members.

In view of the above, in a refrigerant evaporator that includes at least two cores, the following embodiments are presented to inhibit increase of constituent elements in number, inhibit increase of pressure loss at a connection portion between the two cores, and inhibit degradation in refrigerant distribution to tubes downstream of the connection portion.

In one embodiment, the intermediate passageways located on the one side of the tube longitudinal direction thus allow communication between the tubes in the respective pairs. That is, one of the intermediate passageways can connect a corresponding one of the first tubes to a corresponding one of the second tubes. An intermediate tank having a large internal volume for distribution or collection of refrigerant for the tubes can be thus eliminated. Each of the intermediate passageways, which is a connection portion between a corresponding one of the first tubes and a corresponding one of the second tubes, inhibits the refrigerant passageways internally disposed in the corresponding one of the first tubes and the corresponding one of the second tubes from becoming larger or smaller rapidly, thereby capable of reducing the difference between the refrigerant flow velocity in the intermediate passageway and that in the corresponding one of the first tubes and the difference between the refrigerant flow velocity in the intermediate passageway and that in the corresponding one of the second tubes. Increase of pressure loss in the intermediate passageways and degradation of refrigerant distribution to the second tubes can be thus inhibited. The intermediate passageways are configured by using the first plate and the second plate; thus, the constituent elements can be inhibited from increasing in number.

First Embodiment

A first embodiment of the present disclosure is described below with reference to FIGS. **1** to **10**. A refrigerant evaporator according to the present embodiment is for use in a vapor compression type refrigerating cycle in a vehicle air conditioning device for regulating the temperature in a cabin of a vehicle. The refrigerant evaporator is a cooling heat exchanger that cools air by absorbing heat from air to be emitted into the cabin (blown air) and vaporizing a refrigerant (liquid-phase refrigerant).

In the present embodiment, air corresponds to "fluid-to-be-cooled". In FIGS. **1** and **2**, illustration of fins **30**, which is described below, is omitted.

The refrigerating cycle includes a compressor (not shown), a heat dissipating device (condenser) (not shown), and an expansion valve (not shown), in addition to a refrigerant evaporator **1**, as widely known. In the present embodiment, the refrigerating cycle is configured as a receiver cycle that includes a receiver between the heat dissipating device and the expansion valve. The refrigerant in the refrigerating cycle is mixed with a refrigerating machine oil for lubricating the compressor, and a portion of the refrigerating machine oil is circulated in the cycle together with the refrigerant.

As illustrated in FIGS. **1** and **2**, the refrigerant evaporator **1** according to the present embodiment includes a first evaporation unit **10** and a second evaporation unit **20** that are arranged in series in an airflow direction (the direction in which the fluid-to-be-cooled flows) X. In the present embodiment, the first evaporation unit **10** is disposed downstream (the lee side) of the second evaporation unit **20** in the airflow direction X.

The first evaporation unit **10** and the second evaporation unit **20** have the same basic configuration and include heat-exchange cores **11** and **21** and tanks **12** and **22**, respectively. The tanks **12** and **22** are placed on upper portions of the heat-exchange cores **11** and **21**, respectively.

In the present embodiment, the heat-exchange core in the first evaporation unit **10** may be referred to as the first core **11**, and the heat-exchange core in the second evaporation unit **20** may be referred to as the second core **21**. The tank in the first evaporation unit **10** may be referred to as the first tank **12**, and the tank in the second evaporation unit **20** may be referred to as the second tank **22**.

The first core **11** is configured using a stack of tubes **15** and fins **30** (see FIG. **3**) disposed alternately, the tubes **15** extending in an up-and-down direction, the fins **30** joined to adjacent ones of the tubes **15**. The second core **21** is configured using a stack of tubes **25** and the fins **30** disposed alternately, the tubes **25** extending in the up-and-down direction, and the fins **30** joined to adjacent ones of the tubes **25**.

A stacking direction of the stack of the tubes **15** and the fins **30** and that of the tubes **25** and the fins **30** is hereinafter referred to as a tube stacking direction. The tubes configuring the first core **11** may be referred to as first tubes **15**, and the tubes configuring the second core **21** may be referred to as second tubes **25**. A longitudinal direction of the first tubes **15** and the second tubes **25** is referred to as a tube longitudinal direction. In the present embodiment, the first tubes **15** have similar configurations; thus, the wording, the first tube **15**, may cover all the multiple first tubes **15** in the description below. The second tubes **25** have similar configurations; thus, the wording, the second tube **25**, may cover all the multiple second tubes **25** in the description below.

The first tube **15** defines therein a refrigerant passageway through which refrigerant flows. The second tube **25** defines therein a refrigerant passageway through which refrigerant flows. The first tube **15** includes a flat tube having a flat sectional shape extending along the airflow direction X. The second tube **25** includes a flat tube having a flat sectional shape extending along the airflow direction X.

The first tube **15** and the second tube **25** are arranged to overlap with each other when viewed along the airflow direction X. The first tube **15** and the second tube **25** that is arranged to overlap with the first tube **15** when viewed along the airflow direction X may be hereinafter referred to as a pair of tubes **15** and **25**. The refrigerant evaporator **1** includes multiple pairs of tubes **15** and **25**.

An intermediate passageway **40** is provided on one end side of the pair of tubes **15** and **25** in the tube longitudinal direction for communication between the pair of tubes **15** and **25**. In the present embodiment, the intermediate passageway **40** is placed on a lower end side of the pair of tubes **15** and **25**. A plurality of intermediate passageways **40** is thus placed downward of the first core **11** and the second core **21**. The intermediate passageways **40** are arranged in the tube stacking direction. The intermediate passageways **40** are described in detail below.

The first tube **15** is connected to the first tank **12** at the other end of the first tube **15** in the tube longitudinal direction (i.e., an upper end). The second tube **25** is connected to the second tank **22** at the other end in the tube longitudinal direction (i.e., an upper end).

As illustrated in FIG. **3**, the fin **30** is a corrugated fin formed by bending a thin plate material into a wave shape. The fin **30** is joined to flat outer surfaces of the first tube **15** and second tube **25**, serving as a heat-exchange facilitator that provides an enlarged area for heat transfer between air and the refrigerant. In the present embodiment, the fin **30** is joined to both of the pair of tubes **15** and **25**.

With reference back to FIGS. **1** and **2**, side plates **113** are disposed on both end portions in the tube stacking direction of the stack of the first tubes **15** and the fins **30** for reinforcing the core **11**. Side plates **213** are disposed on both end portions in the tube stacking direction of the stack of the second tubes **25** and the fins **30** for reinforcing the core **22**. The side plates **113** and **213** are joined to outermost ones of the fins **30** in the tube stacking direction, respectively.

The first tank **12** is configured using a member having a tubular shape with one end portion in the tube stacking direction closed and the other end portion in the tube stacking direction including a refrigerant inlet **12***a*. The refrigerant inlet **12***a* introduces into the first tank **12** refrigerant having a lowered pressure resulting from pressure reduction at the expansion valve (not shown). In the present embodiment, a left end portion of the first tank **12** as viewed from upstream with respect to the airflow is closed, and a right end portion of the first tank **12** as viewed from upstream with respect to the airflow includes the refrigerant inlet **12***a*.

The first tank **12** has a bottom portion having through hole portions (not shown). The other end portions in the tube longitudinal direction (i.e., upper end portions) of the first tubes **15** are placed in and joined to the through hole portions. The first tank **12** has an internal space that permits communication with the first tubes **15** of the first core **11**. The first tank **12** functions as a refrigerant distributor that distributes refrigerant to the first core **11**.

The second tank **22** is configured using a member having a tubular shape with one end portion in the tube stacking direction closed and the other end portion in the tube stacking direction including a refrigerant outlet **22***a*. The refrigerant outlet **22***a* emits refrigerant from the second tank **22** toward an inlet of the compressor (not shown). In the present embodiment, a left end portion of the second tank **22** as viewed from upstream with respect to the airflow is closed, and a right end portion of the second tank **22** as viewed from upstream with respect to the airflow includes the refrigerant outlet **22***a*.

The second tank **22** has a bottom portion having through hole portions (not shown). The other end portions in the tube longitudinal direction (i.e., upper end portions) of the second tubes **25** are placed in and joined to the through hole portions. The second tank **22** has an internal space that permits communication with the second tubes **25** of the second core **21**. The second tank **22** functions as a refrigerant collector that collects refrigerant from the second core **21**.

As illustrated in FIG. **4**, an intermediate tank **50** is placed on one end side in the tube longitudinal direction (lower end side) of the first core **11** and the second core **21**.

The intermediate tank **50** is a passageway-forming member that provides the intermediate passageways **40**. The intermediate tank **50** is configured by combining a first plate **51** and a second plate **52**.

As illustrated in FIG. **5**, the first plate **51** has a substantially rectangular plate shape. The first plate **51** is joined to one end portions in the tube longitudinal direction (i.e., lower end portions) of the first tubes **15** and the second tubes **25**. Specifically, the first plate **51** has first insertion holes **511** in which the one end portions in the tube longitudinal direction of the first tubes **15** are placed. The first plate **51** also has second insertion holes **512** in which the one end portions in the tube longitudinal direction of the second tubes **25** are placed. The first insertion holes **511** and the second insertion holes **512** are formed by burring on the first plate **51**.

As illustrated in FIG. **6**, the second plate **52** has a substantially U-shaped portion when viewed along the tube stacking direction. Specifically, the second plate **52** has a flat face portion **521** and two side face portions **522**. The flat face portion **521** has a substantially rectangular plate shape and extends in a direction perpendicular to the tube longitudinal direction. The side face portions **522** extend, from end portions in the airflow direction X of the flat face portion **521**, in the tube longitudinal direction away from the first core **11** and the second core **21**. The flat face portion **521** and the two side face portions **522** are integral with one another.

The flat face portion **521** has ribs **523** that protrude from the flat face portion **521** in the tube longitudinal direction away from the first core **11** and the second core **21** and extend in the airflow direction X. Because of the ribs **523**, the flat face portion **521** has recesses **524** in its surface facing the first plate **51**. The recesses **524** sink in the tube longitudinal direction away from the first plate **51**. Each of the recesses **524** communicates with a corresponding one of the first insertion holes **511** and a corresponding one of the second insertion holes **512**, which receive a corresponding one of the pairs of tubes **15** and **25**.

A portion of the flat face portion **521** where no rib **523** is formed is joined to the first plate **51**. As illustrated in FIG. **7**, the recesses **524** of the second plate **52**, together with a surface of the first plate **51** that faces the ribs **523**, define the intermediate passageways **40**. In other words, inner side surfaces of the ribs **523** of the second plate **52** and the surface of the first plate **51** that faces the ribs **523** configure the intermediate passageways **40**.

As illustrated in FIG. **8**, the ribs **523** each have a substantially U-shaped section when viewed along the airflow direction X. More specifically, the ribs **523** each have a substantially U-shaped section when viewed along the airflow direction X over the entire length in the airflow direction X. In the present embodiment, the ribs **523** have similar configurations; thus, the wording, the rib **523**, may cover all the multiple ribs **523** in the description below. The intermediate passageways **40** have similar configurations; thus, the wording, the intermediate passageway **40**, may cover all the multiple intermediate passageways **40** in the description below.

In the present embodiment, the intermediate passageway **40** has an uniform length in the tube stacking direction. The cross-sectional area of the intermediate passageway **40** is thus determined based on the length of the intermediate passageway **40** in the tube longitudinal direction.

With reference back to FIG. **7**, the intermediate passageway **40** includes an upstream portion **41**, a midstream portion **42**, and a downstream portion **43**. The upstream portion **41**, the midstream portion **42**, and the downstream portion **43** are disposed in this order set forth from a refrigerant-flow upstream side. The midstream portion **42** has a cross-sectional area larger than those of the upstream portion **41** and the downstream portion **43**.

The upstream portion **41** has cross-sectional areas that gradually increase toward a refrigerant-flow downstream side. In the present embodiment, the cross-sectional areas of the upstream portion **41** increase linearly toward the refrigerant-flow downstream side. Specifically, the upstream portion **41** has lengths in the tube longitudinal direction that increase toward the refrigerant-flow downstream side.

The upstream portion **41** is disposed on the one end side in the tube longitudinal direction (i.e., the lower end side) of the first tube **15**. The upstream portion **41** communicates with the first tube **15**. Refrigerant thus flows from the first tube **15** into the upstream portion **41**.

The midstream portion **42** has uniform cross-sectional areas toward the refrigerant-flow downstream side. The midstream portion **42** is disposed at a position that corresponds to that of a gap **60** disposed between the first tube **15** and the second tube **25**. The midstream portion **42** is connected to the upstream portion **41**. The refrigerant from the upstream portion **41** thus flows into the midstream portion **42**.

The downstream portion **43** has cross-sectional areas that gradually decrease toward the refrigerant-flow downstream side. In the present embodiment, the cross-sectional areas of the downstream portion **43** decrease linearly toward the refrigerant-flow downstream side. Specifically, the downstream portion **43** has lengths in the tube longitudinal direction that gradually decrease toward the refrigerant-flow downstream side. The downstream portion **43** is disposed on the one end side in the tube longitudinal direction (the lower end side) of the second tube **25**.

The downstream portion **43** is connected at its refrigerant-flow upstream side to the midstream portion **42**. The refrigerant from the midstream portion **42** thus flows into the downstream portion **43**. The downstream portion **43** is connected at its refrigerant-flow downstream side to the second tube **25**. The refrigerant having flowed through the downstream portion **43** thus flows into the second tube **25**.

The first tube **15** internally includes a first refrigerant passageway and first partitions **151** that divide the first refrigerant passageway into narrowed passageways **150** that are arranged in the airflow direction X. The second tube **25** internally includes a second refrigerant passageway and second partitions **251** that divide the second refrigerant passageway into narrowed passageways **250** that are arranged in the airflow direction X.

The cross-sectional area of the midstream portion **42** of the intermediate passageway **40** is set to 0.3 times to 3.0 times the cross-sectional area of the first tube **15** or the second tube **25**. In other words, the cross-sectional area of the midstream portion **42** of the intermediate passageway **40** is set to 0.3 times to 3.0 times the sum of the cross-sectional areas of the narrowed passageways **150** in the first tube **15** or the sum of the cross-sectional areas of the narrowed passageways **250** in the second tube **25**.

The intermediate passageway **40** includes a most-upstream portion **44** that is in the most-upstream location in the airflow direction X of the intermediate passageway **40**. The intermediate passageway **40** includes a most-downstream portion **45** that is in the most-downstream location in the airflow direction X of the intermediate passageway **40**.

The most-upstream portion **44** and the most-downstream portion **45** are configured to have smallest cross-sectional areas in the intermediate passageway **40**. Specifically, the cross-sectional area of the most-upstream portion **44** is set to 0.3 times to 3.0 times the cross-sectional area of each of the narrowed passageways **150** and the narrowed passageways **250**, and the cross-sectional area of the most-downstream portion **45** is set to 0.3 times to 3.0 times the cross-sectional area of each of the narrowed passageways **150** and the narrowed passageways **250**. In other words, the cross-sectional area of the most-upstream portion **44** is set to 0.3 times to 3.0 times the cross-sectional area of any one of the narrowed passageways **150** or the narrowed passageways **250**, and the cross-sectional area of the most-downstream portion **45** is set to 0.3 times to 3.0 times the cross-sectional area of any one of the narrowed passageways **150** or the narrowed passageways **250**.

The narrowed passageways **150** in the first tube **15** include a first narrowed passageway **1501** to an n^{th} narrowed passageway **150*n*** (where "n" is a natural number) that are arranged sequentially toward the second tubes **25**. In other words, the 1^{st} narrowed passageway **1501** is farthest from the second tube **25**, and the n^{th} narrowed passageway **150*n*** is closest to the second tube **25**. A portion of the intermediate passageway **40** through which refrigerant that has just flowed out from the n^{th} narrowed passageway **150*n*** flows may be hereinafter referred to as an n^{th} outflow portion **46*n***.

In the present embodiment, the narrowed passageways **150** in the first tube **15** include the 1^{st} narrowed passageway **1501** to a 7^{th} narrowed passageway **1507** that are arranged sequentially toward the second tube **25**. The intermediate passageway **40** thus has a 1^{st} outflow portion **461** to a 7^{th} outflow portion **467** that are arranged sequentially toward the second tube **25**.

A method for manufacturing the refrigerant evaporator according to the present embodiment is described below.

Constituent elements of the refrigerant evaporator, such as the first tubes **15**, the second tubes **25**, the fins **30**, the first tank **12**, the second tank **22**, the first plate **51**, and the second plate **52**, are manufactured first. Manufacturing methods of the first plate **51** and the second plate **52** of the intermediate tank **50** is described below in detail.

The first plate **51** of the intermediate tank **50** is fabricated by roll-forming. Specifically, a first elongated thin plate **710** as illustrated in FIG. **9** is provided as a roll material **711**. Roll-forming is performed on the roll material **711** using a first roll die **712** to form the insertion holes **511** and **512**, which are through holes. The first thin plate **710** that has the insertion holes **511** and **512** formed therein is then cut to a predefined first reference length by a cutter **713**. In this manner, the first plate **51** is fabricated.

The second plate **52** of the intermediate tank **50** is then formed by roll-forming. Specifically, a second elongated thin plate **720** as illustrated in FIG. **10** is provided as a roll material **721**. Roll-forming is performed on the roll material **721** using a second roll die **722** to form the ribs **523**. The second thin plate **720** that has the ribs **523** formed therein is then cut to a predefined second reference length with a cutter **723**. In this manner, the second plate **52** is fabricated.

The first tubes **15** and the second tubes **25** are temporarily secured to the first plate **51** and the second plate **52** formed as described above. The fins **30**, the first tank **12**, and the second tank **22** are temporarily secured to the first tubes **15** and the second tubes **25** temporarily secured as described above. In this manner, a temporary assembly with constituent elements of the refrigerant evaporator temporarily secured thereto is available.

The temporary assembly is heated and thereby brazed in a heating furnace. The constituent elements of the refrigerant evaporator are joined by brazing in this manner, whereby the refrigerant evaporator is completed.

As described above, in the present embodiment, the intermediate passageways **40** are provided on the one end side in the longitudinal direction of the pairs of tubes **15** and **25** for communication between the tubes **15** and **25** in each pair. In the present embodiment, the first tubes **15** and the second tubes **25** form the pairs of tubes **15** and **25**. That is, one intermediate passageway **40** is provided for each pair of tubes **15** and **25**, and each intermediate passageway **40** can couple one pair of tubes **15** and **25**.

An intermediate tank having a large internal volume for distribution or collection of refrigerant for the tubes **15** and **25** can be thus eliminated. The intermediate passageway **40**, which is a connection portion between the pair of tubes **15** and **25**, inhibits the refrigerant passageways internally disposed in the pair of tubes **15** and **25** from becoming larger or smaller rapidly, thereby capable of reducing the difference between the refrigerant flow velocity in the intermediate passageway **40** and that in the tube **15** and the difference between the refrigerant flow velocity in the intermediate passageway **40** and that in the tube **25** in the pair. Increase of the pressure loss in the intermediate passageway **40** and degradation of refrigerant distribution to the second tubes **25** can be thus inhibited.

By promoting reduction of the pressure loss and an even distribution of refrigerant as described above, the efficiency of heat transfer of the refrigerant evaporator can be increased and cooling capability of a vehicle air conditioning device can be improved. Power consumption of the compressor as well as the size and weight of the refrigerant evaporator can be reduced at the same cooling capability.

The cross-sectional area of the n^{th} narrowed passageway **150*n*** in the first tube **15** as illustrated in FIG. **7** is denoted as Sn. The cross-sectional area of the nth outflow portion **46*n*** in the intermediate passageway **40** is denoted as Mn. Here, the intermediate passageway **40** according to the present embodiment is configured to satisfy an expression (1) described below. In the expression (1), k is a natural number equal to or smaller than n.

[Expression 1]

$$0.3\sum_{i=1}^{k} S_i < M_k < 3.0\sum_{i=1}^{k} S_i \tag{1}$$

For example, the intermediate passageway **40** according to the present embodiment is configured to satisfy relationships described below.

$$0.3S1<M1<3.0S1,$$

$$0.3(S1+S2)<M2<3.0(S1+S2),$$

$$0.3(S1+S2+S3)<M7<3.0(S1+S2+S3),$$

$$0.3(S1+S2+S3+S4)<M7<3.0(S1+S2+S3+S4),$$

$$0.3(S1+S2+S3+S4+S5)<M7<3.0(S1+S2+S3+S4+S5),$$

$$0.3(S1+S2+S3+S4+S5+S6)<M7<3.0(S1+S2+S3+S4+S5+S6),$$

and

$$0.3(S1+S2+S3+S4+S5+S6+S7)<M7<3.0(S1+S2+S3+S4+S5+S6+S7).$$

Then, the area of the refrigerant passageway can be inhibited from increasing rapidly when refrigerant flows out from the narrowed passageways **150** of the first tube **15** into the intermediate passageway **40**, whereby the pressure loss can be reduced.

The intermediate passageway **40** is desirably configured to satisfy an expression (2) described below. In the expression (2), k is a natural number equal to or smaller than n.

[Expression 2]

$$0.5\sum_{i=1}^{k} S_i < M_k < 2.0\sum_{i=1}^{k} S_i \tag{2}$$

For example, the intermediate passageway **40** according to the present embodiment is configured to satisfy relationships described below.

$$0.5S1<M1<2.0S1,$$

$$0.5(S1+S2)<M2<2.0(S1+S2),$$

$$0.5(S1+S2+S3)<M2<2.0(S1+S2+S3),$$

$$0.5(S1+S2+S3+S4)<M2<2.0(S1+S2+S3+S4),$$

$$0.5(S1+S2+S3+S4+S5)<M2<2.0(S1+S2+S3+S4+S5),$$

$$0.5(S1+S2+S3+S4+S5+S6)<M2<2.0(S1+S2+S3+S4+S5+S6),$$

and

$$0.5(S1+S2+S3+S4+S5+S6+S7)<M7<2.0(S1+S2+S3+S4+S5+S6+S7).$$

Then, the area of the refrigerant passageway can be further inhibited from increasing rapidly when refrigerant flows out from the narrowed passageways **150** of the first tube **15** into the intermediate passageway **40**, whereby the pressure loss can be further reduced.

A conventional refrigerant evaporator including an intermediate tank having a large internal volume for distribution or collection of refrigerant for first tubes **15** and second tubes **25** is referred to as a refrigerant evaporator of a first comparative example.

In an intermediate period, winter, and other periods when the cooling thermal load is low, lowering the refrigerant flow rate, the refrigerant evaporator according to the first comparative example that includes the intermediate tank downward of the heat-exchange cores suffers a significant reduction in flow velocity of refrigerant due to the large internal volume of the intermediate tank, which results in a greater likelihood that refrigerating machine oil mixed in the refrigerant is retained in the intermediate tank. Additionally, refrigerant in the liquid phase is likely to be retained in the intermediate tank due to the low cooling thermal load. The refrigerating cycle may be thus operated with a shortage of refrigerating machine oil or refrigerant, possibly resulting in failure or insufficient performance of the refrigerating machine.

Additionally, refrigerant in a gas-liquid two-phase state is present in the intermediate tank, with the refrigerant flowing through the tubes **15** and **25** having different ratios of the gas phase to the liquid phase. The first tubes **15** and the second tubes **25** thus have different inlet-to-outlet differential pressures, resulting in imbalance in flow rate of refrigerant flowing through the first tubes **15** and the second tubes **25**. The refrigerant distribution may be thus degraded.

When liquid-phase refrigerant is retained in the intermediate tank, the level of the liquid-phase refrigerant may reach an outlet portion of the intermediate tank to the second tube **25**. Refrigerant in both of the liquid and gas states may cause noise when flowing into the second tube **25**.

In contrast, the first tube **15** of the first core **11** is coupled to the second tube **25** of the second core **21** by the intermediate passageway **40**, which has a small internal volume, in the present embodiment. Liquid-phase refrigerant and refrigerating machine oil that have flown into the intermediate passageway **40** will thus flow into the second tube **25** without being retained in the intermediate passageway **40** even at a low refrigerant flow rate. Operation of the refrigerating cycle with a shortage of refrigerant or refrigerating machine oil can be thus inhibited.

As a result, the amounts of refrigerant and refrigerating machine oil used in the refrigerating cycle can be reduced. Additionally, liquid-phase refrigerant and refrigerating machine oil are inhibited from being retained (stagnating) at a bottom portion of the intermediate tank, which can thereby reduce refrigerant-passing-noise.

With each intermediate passageway **40** coupling one first tube **15** of the first core **11** to one second tube **25** of the second core **21** as in the present embodiment, uniform amounts of refrigerant distributed to each of the second tubes **25** can be maintained even when the refrigerant evaporator is installed at an angle tilted from a vertical position. The cooling capability of a vehicle air conditioning device can be thus maintained.

Here, a conventional refrigerant evaporator including an intermediate passageway **40** configured by stacking three plates, i.e., a first plate member, a second plate member, and a third plate member, is referred to as a refrigerant evaporator according to a second comparative example. The intermediate passageway **40** of the refrigerant evaporator according to the second comparative example is configured using three plate members, resulting in an increased number of constituent elements.

The second plate member used in the intermediate passageway of the refrigerant evaporator according to the second comparative example is fabricated by performing a punching process on a metal material having a flat plate shape. The area of the passageway in the intermediate passageway thus depends on the thickness of the second plate member. The second plate member generally has a small thickness, thus unable to increase the area of the passageway in the intermediate passageway, resulting in increase of the pressure loss. Increasing the thickness of the second plate member to thereby increase the area of the passageway in the intermediate passageway may be conceivable, which will, however, lead to increase in the amount of the material for the second plate member, possibly resulting in an increased weight, degraded workability, and increased material costs.

Furthermore, the three plate members, which have significant heat capacities, and the tubes have different heat capacities and transfer heat differently when they are joined to one another by brazing. This causes undesirable brazing conditions and thus difficulty in manufacturing.

In contrast, the intermediate passageways **40** in the present embodiment are configured by using the first plate **51** and the second plate **52**. Increase of constituent elements in number can be thus inhibited. Additionally, the amount of materials necessary to fabricate the refrigerant evaporator can be reduced; thus, the weight can be reduced and degradation of workability can be inhibited. Material and process costs can be thus reduced.

Furthermore, the intermediate tank **50** (the first plate **51** and the second plate **52**) is made using the two thin plates **710** and **720**, which have small and mostly even heat capacities; thus the first plate **51** and the second plate **52** can be joined together by brazing. Thus, a highly reliable hermetic seal can be readily provided to the intermediate tank **50** by brazing.

Additionally, the first plate **51** and the second plate **52** are fabricated by roll-forming and can be thus processed continuously using the roll dies **712** and **722**. Increased production speed can thus become available for the intermediate tank **50**, thereby capable of producing a large number of refrigerant evaporators in the same period of time.

Furthermore, since the first plate **51** and the second plate **52** are fabricated by roll-forming, a change to the required cooling capability of the refrigerant evaporator can be readily satisfied by cutting the thin plates **710** and **720** to lengths corresponding to the required cooling capability. The number of man-hours for designing and that for manufacturing setups can be thus reduced.

Furthermore, by forming the second plate **52** to provide the U-shaped section when viewed from the tube stacking direction, the stiffness of the second plate **52** can be improved due to rib effect. The thickness of the second plate **52** can be thus reduced, and thereby the weight of the refrigerant evaporator can be reduced.

Second Embodiment

A second embodiment of the present disclosure is described below with reference to FIGS. **11** and **12**. The second embodiment is different from the first embodiment described above in shape and other features of the tubes **15** and **25**.

As illustrated in FIGS. **11** and **12**, a first tube **15** has a cross-sectional area smaller than that of a second tube **25** in the present embodiment. Specifically, the first tube **15** has a length in the airflow direction X shorter than that of the second tube **25**. Additionally, the number of narrowed passageways **150** in the first tube **15** is smaller than the number of narrowed passageways **250** in the second tube **25**.

In the present embodiment, in the first tube **15** and the second tube **25**, the cross-sectional area of the first tube **15**, through which a large amount of liquid-phase refrigerant flows, can be reduced, and the cross-sectional area of the second tube **25**, through which a large amount of gas-phase refrigerant flows, can be increased. Maximization of flow velocity of refrigerant and minimization of the amount of refrigerant pressure loss in the tubes **15** and **25** can be thus promoted, and thereby cooling performance of a vehicle air conditioning device can be improved.

Third Embodiment

A third embodiment of the present disclosure is described below with reference to FIGS. **13** and **14**. The third embodiment is different from the first embodiment described above in shape and other features of the intermediate tank **50**.

As illustrated in FIG. **13**, intermediate passageways **40**, which are ribs **523**, arranged in the tube stacking direction have mutually different shapes in the present embodiment. Specifically, the intermediate passageways **40** (the ribs **523**) have mutually different lengths in the tube longitudinal direction when viewed along the airflow direction X. The intermediate passageways **40** are thus mutually different in the area of the passageway.

Specifically, one of the intermediate passageways **40**, located in a portion of an intermediate tank **50** that has a larger air thermal load, has a larger area of the passageway in the present embodiment. More specifically, as illustrated in FIG. **14**, one of the intermediate passageways **40**, located in a portion of the intermediate tank **50** through which air flows at a higher air velocity, has a larger area of the passageway.

That is, one of the intermediate passageways **40** (a rib **523**) located in a portion subjected to a higher air velocity has a longer length in the tube longitudinal direction. The intermediate passageways **40** (the ribs **523**) have the same lengths in the tube stacking direction.

In the present embodiment, the area of the passageway of one of the intermediate passageways **40** in a location having an elevated air thermal load can be increased, and the area of the passageway of one of the intermediate passageways **40** in a location having a lowered air thermal load can be reduced. Gas-phase refrigerant flowing from the intermediate passageways **40** to most-downstream locations of second tubes **25** can thus have uniform degrees of superheating, which causes the overall areas of a refrigerant evaporator to serve as refrigerant evaporation areas. As a result, liquid-phase refrigerant can be inhibited from flowing into the compressor (liquid-back phenomenon), and gas-phase refrigerant having an excessive degree of superheating can be inhibited from flowing into the compressor. The cooling performance of a vehicle air conditioning device can be thus improved, and power consumption of the compressor can be reduced.

Fourth Embodiment

A fourth embodiment of the present disclosure is described below with reference to FIG. **15**. The fourth embodiment is different from the first embodiment described above in shape and other features of the first tank **12**. In FIG. **15**, illustration of fins **30** is omitted.

As illustrated in FIG. **15**, a first tank **12** according to the present embodiment has a refrigerant outlet **12***b* formed on one end side in the tube stacking direction (a right-hand side of the paper in FIG. **15**). The refrigerant outlet **12***b* emits refrigerant from the first tank **12** toward the inlet of the compressor (not shown).

The first tank **12** internally includes a partition **120** that partitions an internal space of the first tank **12** into two spaces in the tube stacking direction. The partition **120** partitions the internal space of the first tank **12** into a first space **121** and a second space **122**. In the present embodiment, the partition **120** is placed beyond a middle portion of the first tank **12** in the tube stacking direction toward a refrigerant inlet **12***a*.

The first space **121** communicates with the refrigerant inlet **12***a*. The refrigerant inlet **12***a* constitutes an inflow portion that allows refrigerant to flow into the first space **121** from outside.

The second space **122** communicates with the refrigerant outlet **12***b*. The refrigerant outlet **12***b* constitutes an outflow portion that allows refrigerant to flow from the second space **122** to the outside.

Of first tubes **15** included in a first core **11**, those first tubes **15** that communicate with the first space **121** may be referred to as first inflow tubes **15***a*, and those first tubes **15** that communicate with the second space **122** may be referred to as first outflow tubes **15***b*.

Of second tubes **25** included in a second core **21**, those second tubes **25** that face the first inflow tubes **15***a*, i.e., those second tubes **25** placed upstream of the first inflow tubes **15***a* with respect to the airflow, may be referred to as second inflow tubes **25***a*. Of the second tubes **25** included in the second core **21**, those second tubes **25** that face the second outflow tubes **15***b*, i.e., those second tubes **25** placed upstream of the second outflow tubes **15***b* with respect to the airflow, may be referred to as second outflow tubes **25***b*.

Flow of refrigerant in a refrigerant evaporator according to the present embodiment is described next with reference to FIG. **15**.

As indicated by an arrow a, refrigerant having a lowered pressure resulting from pressure reduction at the expansion valve is admitted into the first space **121** from the refrigerant inlet **12***a*, which is included on the other end side in the tube stacking direction of the first tank **12**. As indicated by an arrow b, the refrigerant admitted in the first space **121** flows downward through the first inflow tubes **15***a* of the first core **11**.

As indicated by an arrow c, the refrigerant flown downward through the first inflow tubes **15***a* flows through corresponding ones of intermediate passageways **40** of an intermediate tank **50** from an airflow downstream side to an airflow upstream side into the second inflow tubes **25***a* of the second core **21**. As indicated by an arrow d, the refrigerant flown into the second inflow tubes **25***a* flows upward through the second inflow tubes **25***a* into the second tank **22**.

As indicated by an arrow e, the refrigerant flown into the second tank **22** flows in the second tank **22** toward one end side in the tube stacking direction of the second tank **22** from the other end side in the tube stacking direction of the second tank **22** (from a left-hand side to the right-hand side of the paper in FIG. **15**) into the second outflow tubes **25***b* of the second core **21**. As indicated by an arrow f, the refrigerant flown into the second outflow tubes **25***b* flows downward through the second outflow tubes **25***b* into corresponding ones of the intermediate passageways **40** of the intermediate tank **50**.

As indicated by an arrow g, the refrigerant flown into the corresponding ones of the intermediate passageways **40** flows therethrough from the airflow upstream side to the airflow downstream side into the first outflow tubes **15***b* of the first core **11**. As indicated by an arrow h, the refrigerant flown into the first outflow tubes **15***b* flows upward through the first outflow tubes **15***b* into the second space **122** of the first tank **12**. As indicated by an arrow i, the refrigerant flown into the second space **122** is emitted toward the inlet of the compressor from the refrigerant outlet **12***b* formed on the one end side in the tube stacking direction of the first tank **12**.

In the present embodiment, by using the partition **120** included in the first tank **12**, the numbers of tubes **15** and **25** used at the refrigerant-flow upstream side of the refrigerant evaporator can be reduced and the numbers of tubes **15** and **25** used at the refrigerant-flow downstream side can be increased. Maximization of flow velocity of refrigerant and minimization of the amount of refrigerant pressure loss in the tubes **15** and **25** can be thus promoted, and thereby the cooling performance of a vehicle air conditioning device can be improved.

Fifth Embodiment

A fifth embodiment of the present disclosure is described below with reference to FIGS. **16**, **17**, **18**, and **19**. The present fifth embodiment is different from the first embodiment described above in that an intermediate tank **50** includes a configuration for improving draining. In FIG. **16**, illustration of fins **30** is omitted.

As illustrated in FIG. **16**, portions of the first plate **51** where no intermediate passageway **40** is provided include drain holes **513** and **514**. The drain holes **513** and **514** are through holes that penetrate through the first plate **51**. Portions of the second plate **52** where no intermediate passageway **40** is provided include drain holes **525** and **526**. The drain holes **525** and **526** are through holes that penetrate through the second plate **52**.

That is, the first plate **51** has the drain holes **513** and **514** for draining condensate water. The second plate **52** has the drain holes **525** and **526** for draining condensate water. The positions of the drain holes **525** and **526** in the second plate **52** correspond to those of the drain holes **513** and **514** in the first plate **51**.

Condensate water occurring in the cores **11** and **21** and moving downward on the tubes **15** and **25** or fins **30** are thus discharged through the drain holes **513**, **514**, **525**, and **526** downward from the refrigerant evaporator.

Specifically, as illustrated in FIG. **17**, a first drain hole **513** is provided between adjacent ones of first insertion holes **511** in the first plate **51**. A second drain hole **514** is also provided between adjacent ones of second insertion holes **512** in the first plate **51**. The first drain holes **513** and the second drain holes **514** are through holes that penetrate through the first plate **51**.

In the present embodiment, the first drain hole **513** and the second drain hole **514** each have a triangular shape. Specifically, the first drain hole **513** has an isosceles triangle shape having a base on the airflow downstream side. The second drain hole **514** has an isosceles triangle shape having a base toward the airflow upstream side.

As illustrated in FIG. **18**, a third drain hole **525** and a fourth drain hole **526** are provided between adjacent ones of ribs **523** in the second plate **52**. The third drain hole **525** and the fourth drain hole **526** are arranged in the airflow direction X. The third drain hole **525** is placed downstream of the fourth drain hole **526** with respect to the airflow. The third drain holes **525** and the fourth drain holes **526** are through holes that penetrate through the second plate **52**.

The positions of the third drain holes **525** correspond to those of the first drain holes **513** in the first plate **51**. The third drain hole **525** has a shape similar to that of the first drain hole **513** when viewed from the tube longitudinal direction. That is, the third drain hole **525** has an isosceles triangle shape having a base on the airflow downstream side.

The positions of the fourth drain holes **526** correspond to those of the second drain holes **514** in the first plate **51**. The fourth drain hole **526** has a shape similar to that of the second drain hole **514** when viewed from the tube longitudinal direction. That is, the fourth drain hole **526** has an isosceles triangle shape having a base on the airflow upstream side.

As illustrated in FIG. **19**, bent portions **527** bent downward are placed in outer perimeter portions of the third drain hole **525**. Each of the bent portions **527** is a portion that is bent while the third drain hole **525** is formed by roll forming. In the present embodiment, the bent portion **527** is provided on each of the two equal sides of the isosceles triangle shape of the third drain hole **525**. Although omitted in FIG. **19**, similar bent portions **527** are also placed in an outer perimeter portion of the fourth drain hole **526**.

In the present embodiment, condensate water occurring in the cores **11** and **21** can be discharged from the drain holes **513**, **514**, **525**, and **526** by providing the drain holes **513**, **514**, **525**, and **526** in the first plate **51** and the second plate **52**.

The first plate **51** and the second plate **52** are fabricated by roller forming (a rolling process) which can perform microfabrication. Thus, the drain holes **513** and **514**, in addition to the insertion holes **511** and **512**, can be formed in the first plate **51**, and the drain holes **525** and **526**, in addition to the ribs **523** can be formed in the second plate **52**, as in the present embodiment.

Furthermore, the bent portions **527** are provided in the outer perimeter portions of the drain holes **525** and **526** in the second plate **52** in the present embodiment. The bent portions **527** can facilitate water dripping from the drain holes **525** and **526**.

Sixth Embodiment

A sixth embodiment of the present disclosure is described below with reference to FIGS. **20** and **21**. The sixth embodiment is different from the fifth embodiment described above in shape of the intermediate tank **50**.

As illustrated in FIGS. **20** and **21**, a first plate **51** according to the present embodiment includes a level surface **515** and a sloping surface **516**. The level surface **515** is a surface straight to the tube longitudinal direction, extending in a horizontal direction. The level surface **515** has second insertion holes **512**.

The sloping surface **516** gradually slopes downward toward the airflow downstream side. The sloping surface **516** has first insertion holes **511**. The sloping surface **516** is connected to a portion on the airflow downstream side of the level surface **515**. The level surface **515** and the sloping surface **516** are integral with each another.

In the present embodiment, the sloping surface **516** gradually sloping downward toward the airflow downstream side is included in a portion on the airflow downstream side of the first plate **51**, thus capable of further improving draining of condensate water.

OTHER EMBODIMENTS

The present disclosure is not limited to the foregoing embodiments and can be modified in various manners within the scope of the present disclosure without departing from the spirit of the present disclosure, as in examples described below.

Furthermore, technical features disclosed in the foregoing embodiments may be combined as appropriate within a scope implementable.

(1) While the intermediate tank **50** is placed on the one end side in the tube longitudinal direction (the lower end side) of the cores **11** and **21** in the embodiments described above, the placement of the intermediate tank **50** is not limited to this example. In another example, an intermediate tank **50** may be placed on the other end side in the tube longitudinal direction (the upper end side) of the cores **11** and **21**.

(2) While the rib **523** has a substantially U-shaped section when viewed from the airflow direction X in the embodiments described above, the shape of the rib **523** is not limited to this example. In another example, a rib **523** may have a substantially V-shaped section when viewed from the airflow direction X, as illustrated in FIG. **22**.

(3) While the fin **30** is joined to both of the tubes **15** and **25** in a pair in the embodiments described above, the placement of the fin **30** is not limited to this example. In another example, a fin **30** joined to adjacent ones of first tubes **15** in the tube stacking direction may be provided separately from a fin **30** joined to adjacent ones of second tubes **25** in the tube stacking direction.

(4) While the intermediate tank **50** in the third embodiment described above includes the intermediate passageways **40** that vary in the area of the passageway in a manner dependent on the air velocity distribution, the configuration of the intermediate tank **50** is not limited to this example.

In another example, the intermediate tank **50** may include intermediate passageways **40** that vary in the area of the passageway in a manner dependent on an air temperature distribution (a humidity distribution). Specifically, an intermediate passageway **40** in a location subjected to higher air temperature (humidity) may have a larger area of the passageway.

(5) While the bent portions **527** are provided in the outer perimeter portions of the third drain holes **525** and the fourth drain holes **526** of the second plate **52** in the fifth and sixth embodiments described above, the configurations of the third drain holes **525** and the fourth drain holes **526** are not limited to this example. In another example, no bent portions **527** may be provided in the outer perimeter portions of the third drain holes **525** or the fourth drain holes **526**.

The invention claimed is:

1. A refrigerant evaporator for heat exchange between a fluid and a refrigerant, the refrigerant evaporator comprising:

a first core including a plurality of first tubes through which the refrigerant flows and configured to allow the fluid to flow therethrough in a flow direction, the first core having a first end portion at one end in a tube longitudinal direction, the plurality of first tubes extending along the tube longitudinal direction and stacked in a tube stacking direction, each of the plurality of first tubes having a first end portion at one end in the tube longitudinal direction, the tube longitudinal direction being perpendicular to the flow direction, and the tube stacking direction being perpendicular to both the flow direction and the tube longitudinal direction;

a second core including a plurality of second tubes through which the refrigerant flows and configured to allow the fluid to flow therethrough in the flow direction, the second core arranged in series with the first core in the flow direction, the second core having a first end portion at one end in the tube longitudinal direction, the plurality of second tubes extending along the tube longitudinal direction and stacked in the tube stacking direction, and each of the plurality of second tubes having a first end portion at one end in the tube longitudinal direction;

a first plate connected to both the first end portion of the first core and the first end portion of the second core, and the first plate housing the first end portions of the plurality of first tubes and the first end portions of the plurality of second tubes; and

a second plate facing the first core and the second core across the first plate and joined to the first plate in the tube longitudinal direction, wherein

the second plate includes a plurality of ribs protruding from the second plate along the tube longitudinal direction away from the first core and the second core and extending along the flow direction,

the plurality of ribs define, together with the first plate, a plurality of intermediate passageways therein,

each of the plurality of first tubes is arranged to overlap with a respective one of the plurality of second tubes when viewed along the flow direction to form a pair of tubes facing each other along the flow direction, wherein

each of the plurality of intermediate passageways is configured to allow the refrigerant having flowed out of a corresponding one of the plurality of first tubes to flow into a corresponding one of the plurality of second tubes,

each of the plurality of first tubes has an inner space divided into a plurality of first narrowed passageways,

the plurality of first narrowed passageways are arranged in the flow direction,

the plurality of first narrowed passageways are formed of a 1^{st} narrowed passageway to an n^{th} narrowed passageway that are arranged sequentially toward the plurality of second tubes, where n is a natural number,

the n^{th} narrowed passageway has a cross-sectional area denoted as S_n,

each of the plurality of intermediate passageways includes a portion with a cross-sectional area denoted as M_n, through which the refrigerant that has just flowed out of the n^{th} narrowed passageway flows, and

each of the plurality of intermediate passageways is configured to satisfy

$$0.3\sum_{i=1}^{k} S_i < M_k < 3.0\sum_{i=1}^{k} S_i$$

where k is a natural number less than or equal to n.

2. The refrigerant evaporator according to claim **1**, wherein

each of the plurality of intermediate passageways is configured to satisfy

$$0.5\sum_{i=1}^{k} S_i < M_k < 2.0\sum_{i=1}^{k} S_i$$

where k is a natural number less than or equal to n.

3. The refrigerant evaporator according to claim **1**, wherein

the first core is disposed downstream of the second core in the flow direction,

the plurality of intermediate passageways are configured to allow the refrigerant having flowed out of the plurality of first tubes to flow into the plurality of second tubes,

each of the plurality of second tubes has an inner space divided into a plurality of second narrowed passageways arranged in the flow direction, and

a most downstream portion of each of the plurality of intermediate passageways in the flow direction has a cross-sectional area that is set to 0.3 times to 3.0 times a cross-sectional area of each of the plurality of first narrowed passageways or a a cross-sectional area of each of the plurality of second narrowed passageways.

4. The refrigerant evaporator according to claim **1**, wherein

the first core is disposed downstream of the second core in the flow direction,

the plurality of intermediate passageways are configured to allow the refrigerant having flowed out of the plurality of first tubes to flow into the plurality of second tubes,

each of the plurality of second tubes has an inner space divided into a plurality of second narrowed passageways arranged in the flow direction, and

a most upstream portion of each of the plurality of intermediate passageways in the flow direction has cross-sectional area that is set to 0.3 times to 3.0 times a cross-sectional area of the each of the plurality of first narrowed passageways and each of the plurality of second narrowed passageways.

5. The refrigerant evaporator according to claim **1**, wherein

each of the plurality of intermediate passageways has a U-shaped or V-shaped cross-section when viewed along the flow direction.

6. The refrigerant evaporator according to claim **1**, wherein

each of the plurality of intermediate passageways is disposed downward of a corresponding one of the pairs of tubes.

7. The refrigerant evaporator according to claim **1**, wherein

the plurality of intermediate passageways are configured to allow the refrigerant having flowed out of the plurality of first tubes to flow into the plurality of second tubes,

the first core is disposed downstream of the second core in the flow direction, and

each of the plurality of first tubes has a cross-sectional area smaller than that of each of the plurality of second tubes.

8. The refrigerant evaporator according to claim **1**, wherein

at least one of the plurality of intermediate passageways has a cross-sectional area different from a cross-sectional area of another of the plurality of intermediate passageways.

9. The refrigerant evaporator according to claim **1**, wherein

the first core has a second end portion at another end in the tube longitudinal direction,

each of the plurality of first tubes has a second end portion at another end in the tube longitudinal direction,

the first core includes a first tank connected to the second end portions of the plurality of first tubes for collection or distribution of the refrigerant from or to the plurality of first tubes,

the second core has a second end portion at another end in the tube longitudinal direction,

each of the plurality of second tubes has a second end portion at another end in the tube longitudinal direction,

the second core includes a second tank connected to the second end portions of the plurality of second tubes for collection or distribution of the refrigerant from or to the plurality of second tubes, and

the first tank includes:

a partition configured to divide an internal space of the first tank into a first space and a second space that are arranged side by side in the tube stacking direction;

an inflow portion configured to allow the refrigerant to flow into the first space from outside; and

an outflow portion configured to allow the refrigerant to flow from the second space to the outside.

10. The refrigerant evaporator according to claim **1**, wherein

the plurality of intermediate passageways are disposed downward of the pairs of tubes,

the first plate defines a through hole that passes through the first plate at a location where the plurality of intermediate passageways are not formed, and

the second plate defines a through hole that passes through the second plate at a location where the plurality of intermediate passageways are not formed.

11. The refrigerant evaporator according to claim **10**, wherein

a bent portion bent downward from the second plate is connected to an outer perimeter portion of the through hole disposed in the second plate.

12. The refrigerant evaporator according to claim **1**, wherein

a sloping surface sloping downward toward a downstream side of the flow direction is formed in a downstream side portion of the first plate in the flow direction.

13. A method for manufacturing the refrigerant evaporator according to claim **1**, the method comprising:

forming through apertures into which the plurality of first tubes and the plurality of second tubes are to be inserted by performing roll-forming on a first elongated thin plate using a first roll die;

cutting the first elongated thin plate having the through apertures to a predefined first reference length to form the first plate;

forming the plurality of ribs by performing roll-forming on a second elongated thin plate using a second roll die;

cutting the second elongated thin plate having the plurality of ribs to a predefined second reference length to form the second plate;

temporarily securing the plurality of first tubes and the plurality of second tubes to the first plate and the second plate; and heating and brazing, in a heating furnace, a temporary assembly formed of the first tubes, the second tubes, the first plate, and the second plate that are temporarily secured to each other.

* * * * *