US010954070B1

(12) **United States Patent**
Koeninger et al.

(10) **Patent No.: US 10,954,070 B1**
(45) **Date of Patent: Mar. 23, 2021**

(54) **CONVEYOR WITH A STANCHION FOR MOUNTING AN EQUIPMENT ON THE CONVEYOR**

(71) Applicant: **INTELLIGRATED HEADQUARTERS, LLC**, Mason, OH (US)

(72) Inventors: **Timothy A. Koeninger**, Alexandria, KY (US); **Eric Roth**, West Chester, OH (US)

(73) Assignee: **Intelligrated Headquarters, LLC**, Mason, OH (US)

(*) Notice: Subject to any disclaimer, the term of this patent is extended or adjusted under 35 U.S.C. 154(b) by 0 days.

(21) Appl. No.: **16/600,679**

(22) Filed: **Oct. 14, 2019**

(51) **Int. Cl.**
B65G 21/10 (2006.01)
B65G 47/64 (2006.01)

(52) **U.S. Cl.**
CPC ***B65G 21/10*** (2013.01); *B65G 47/64* (2013.01)

(58) **Field of Classification Search**
CPC B65G 21/00; B65G 21/06; B65G 21/10
USPC 198/860.1, 861.1
See application file for complete search history.

(56) **References Cited**

U.S. PATENT DOCUMENTS

2,793,738	A *	5/1957	Erickson	B65G 21/06	198/860.1
3,075,622	A *	1/1963	Attwood	E04B 1/5818	403/245
3,944,054	A *	3/1976	Ensinger	B65G 21/06	198/860.3
5,421,451	A *	6/1995	Easton	B65G 21/06	198/860.1
5,682,977	A *	11/1997	White	B65G 21/2063	198/836.1
6,296,111	B1 *	10/2001	Mekanik	B65G 21/06	198/836.3
6,843,367	B1 *	1/2005	Gentile	B65G 51/03	198/861.1
8,763,793	B2 *	7/2014	Ertel	B65G 21/02	198/860.1
8,985,317	B2 *	3/2015	Martin	B65G 39/125	198/828
9,944,496	B2 *	4/2018	Matheisl	B66B 21/02	
2005/0115809	A1 *	6/2005	Lutz	B65G 13/12	198/860.1

* cited by examiner

Primary Examiner — James R Bidwell
(74) *Attorney, Agent, or Firm* — Alston & Bird LLP

(57) **ABSTRACT**

A conveyor is described. The conveyor includes a conveyor frame that includes a slot defined on a first portion of the conveyor frame and a notch defined on a second portion of the conveyor frame. Further, the conveyor includes a stanchion configured to be mounted on the conveyor frame. In this regard, the stanchion comprises a hook adapted to pass through the slot of the conveyor frame and a surface that defines an aperture, the aperture adapted to enable a bolt to pass through the stanchion and insert into the notch in the second portion of the conveyor frame.

18 Claims, 11 Drawing Sheets

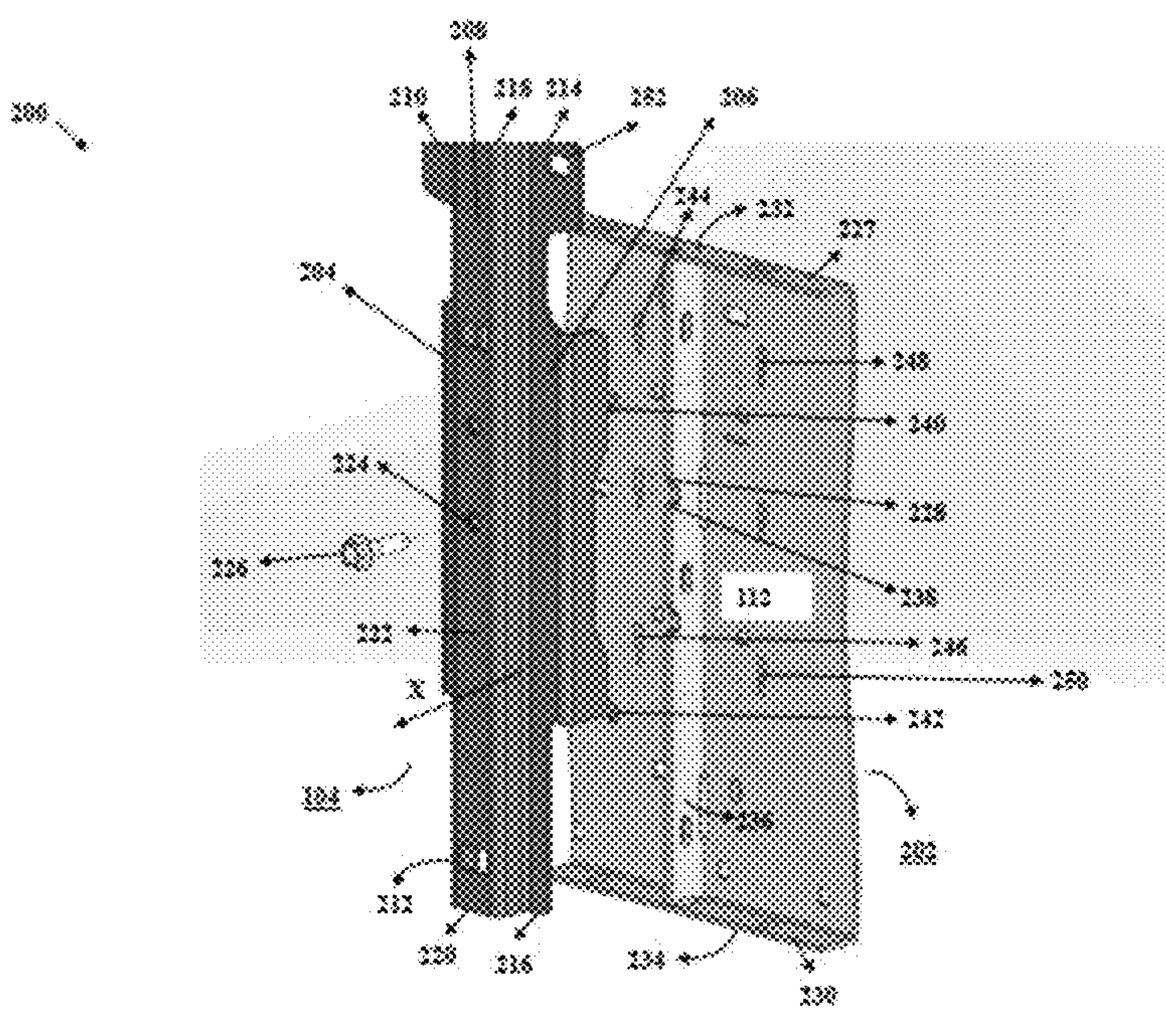

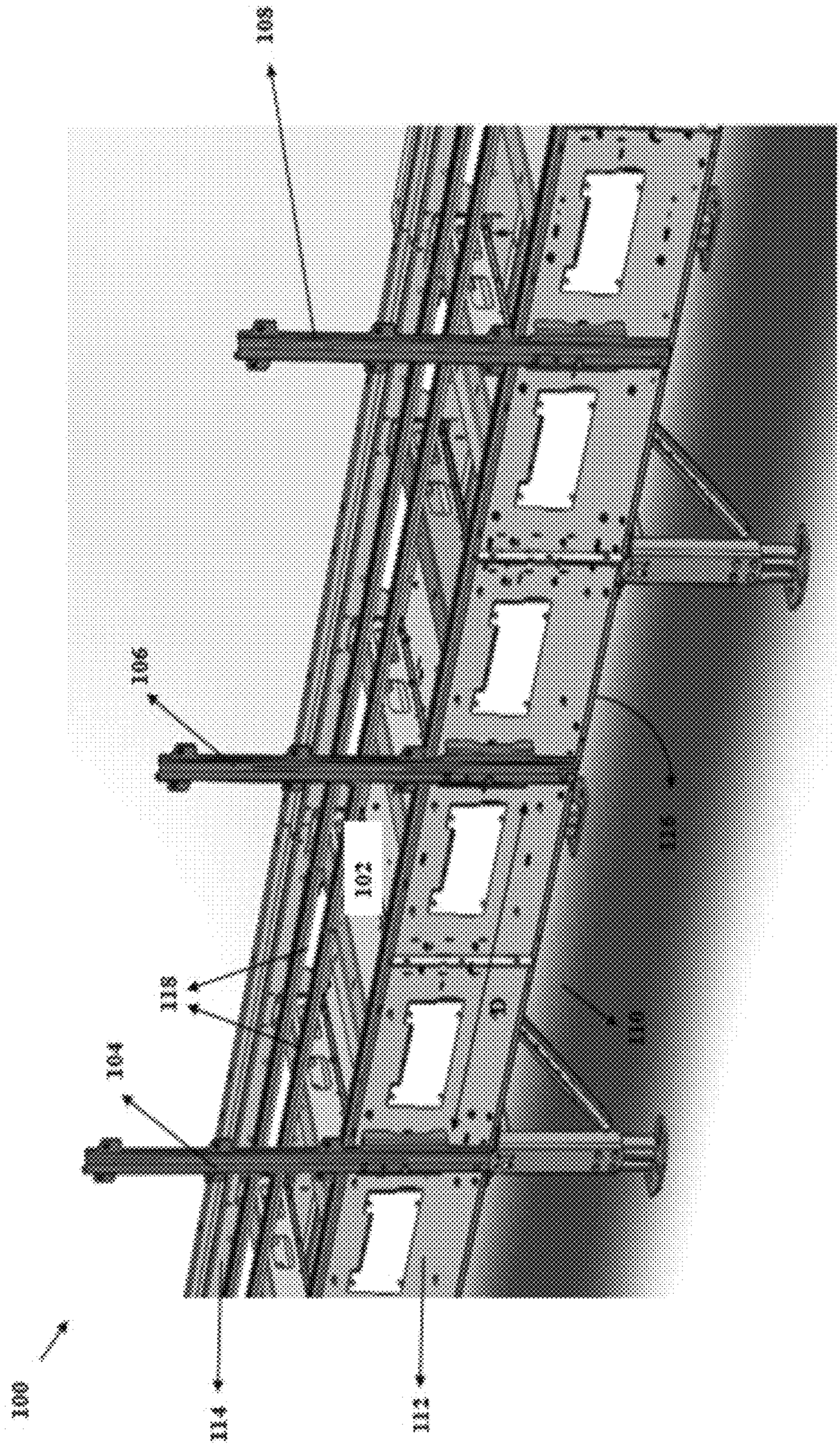

FIG. 1

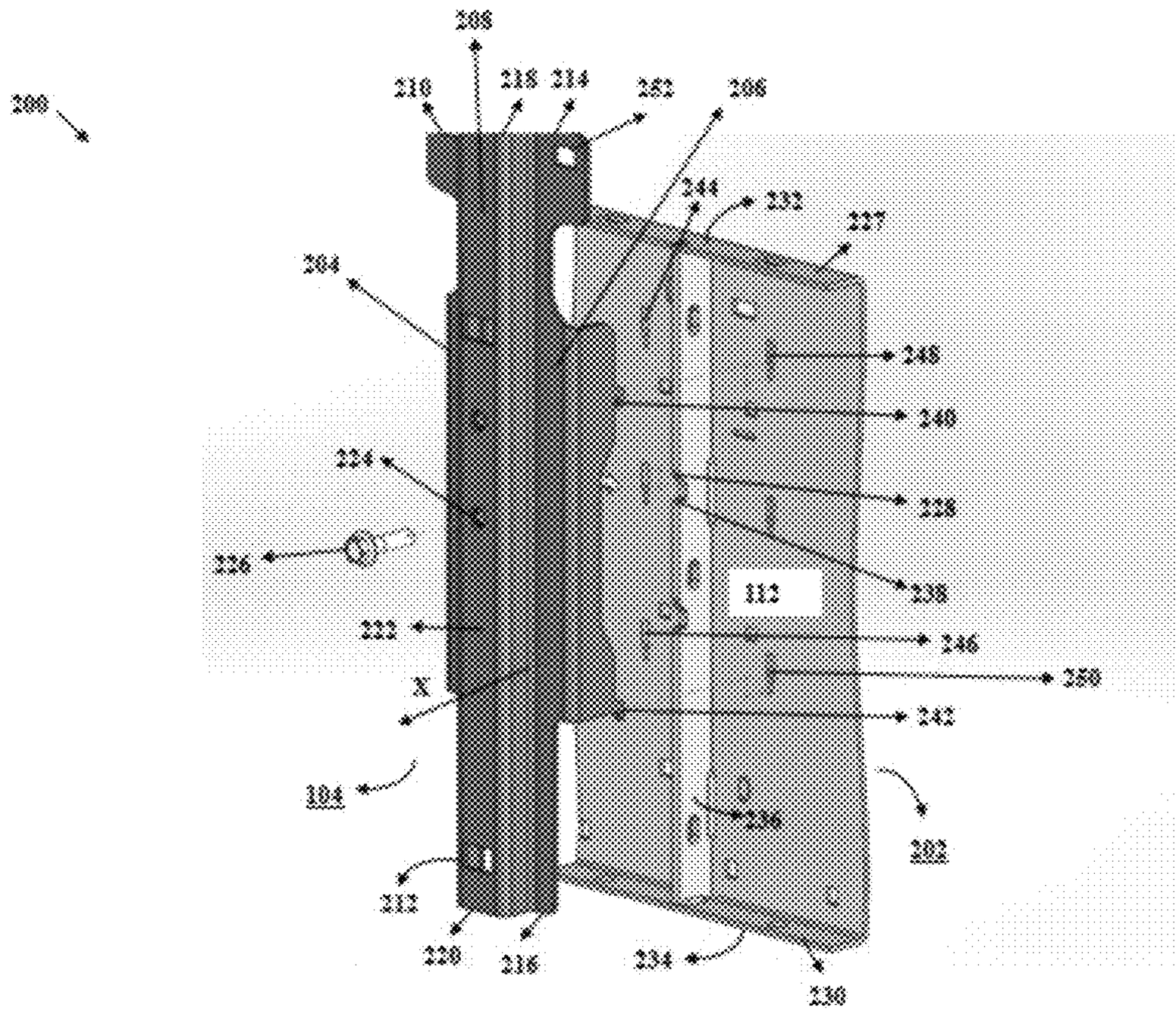
200
208
210
218
214
282
206
244
232
237
204
248
240
224
238
226
238
113
222
246
250
X
242
104
236
202
212
220
216
234
230

FIG. 2

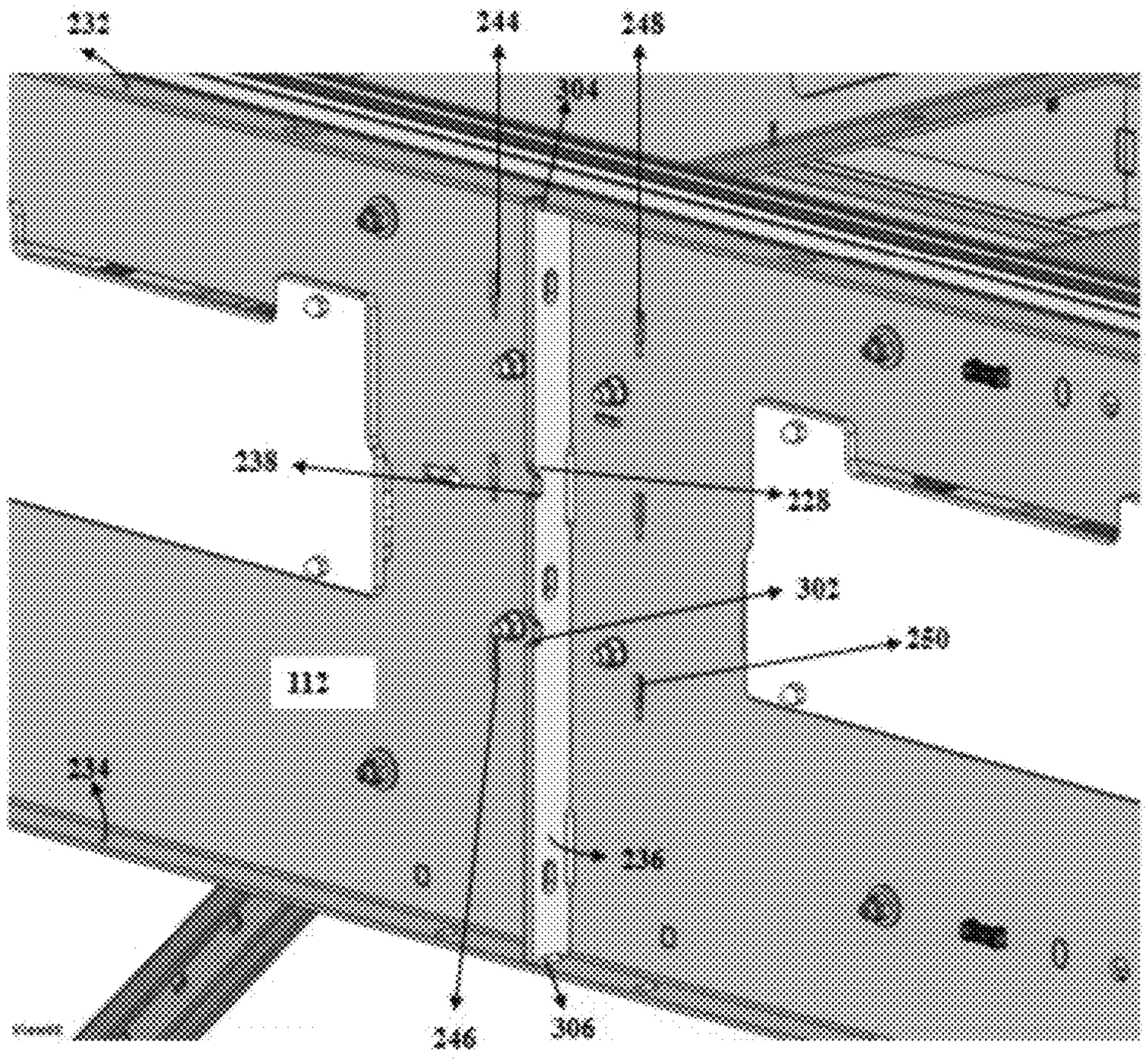

FIG. 3

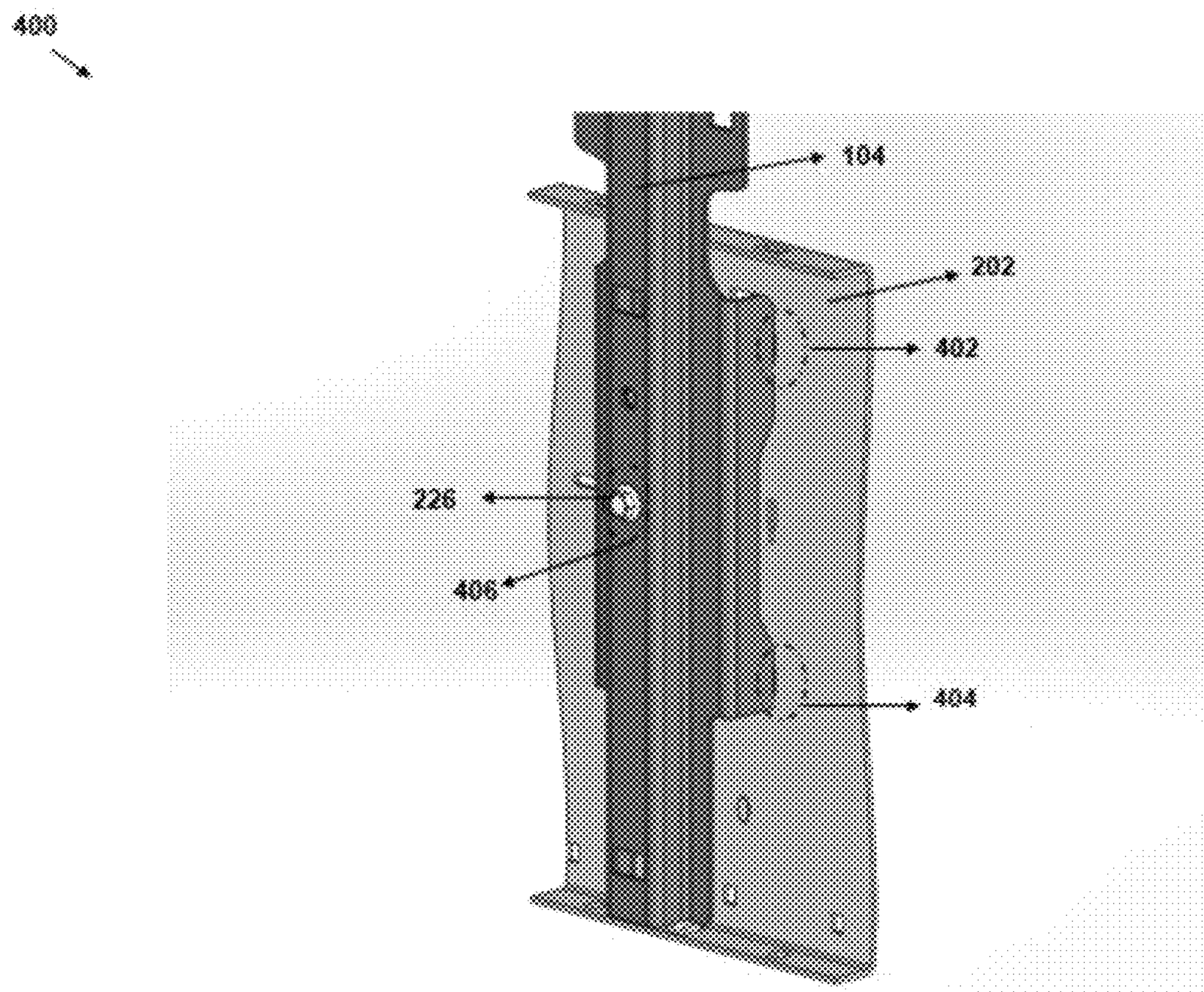

FIG. 4

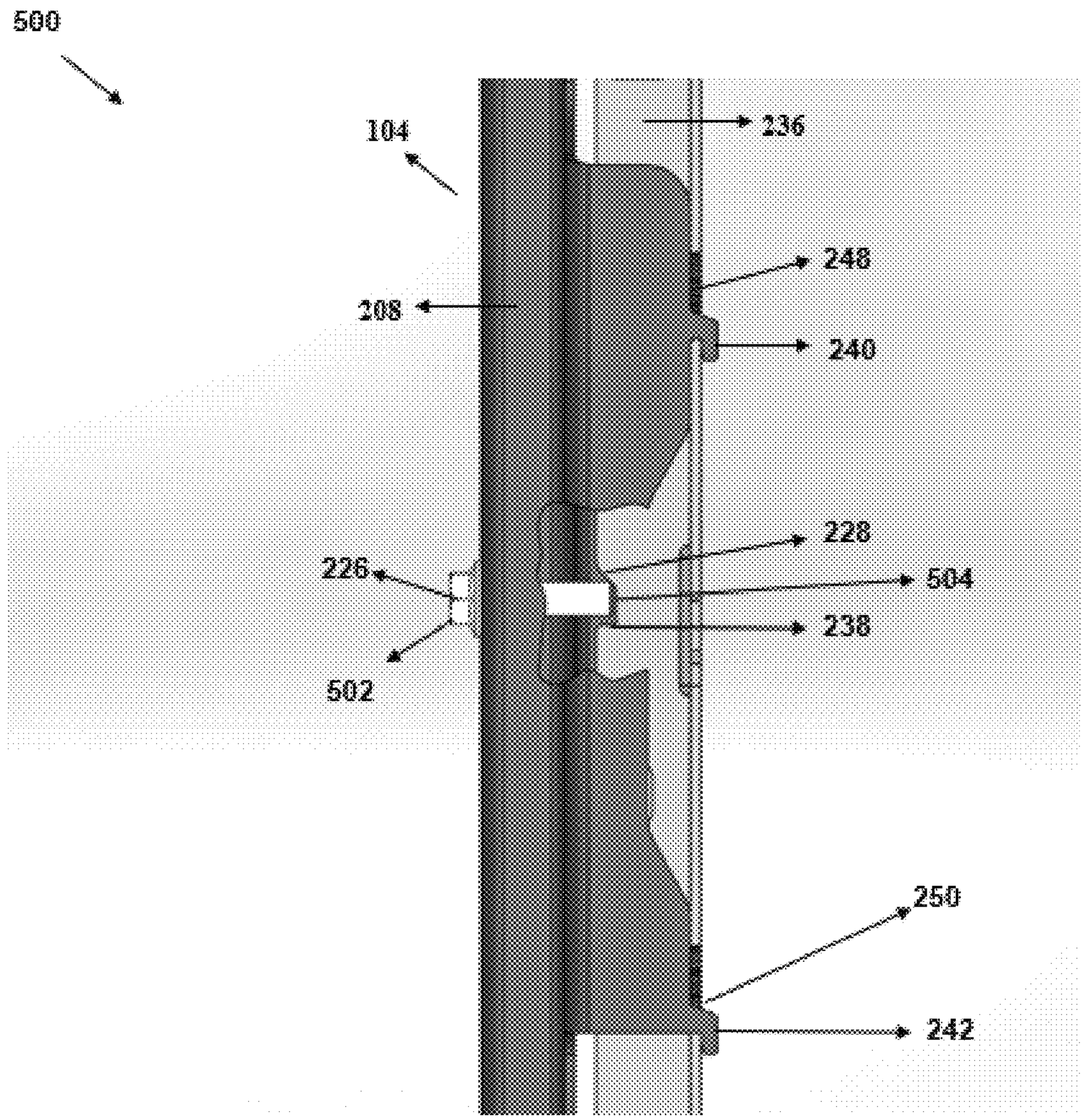

FIG. 5

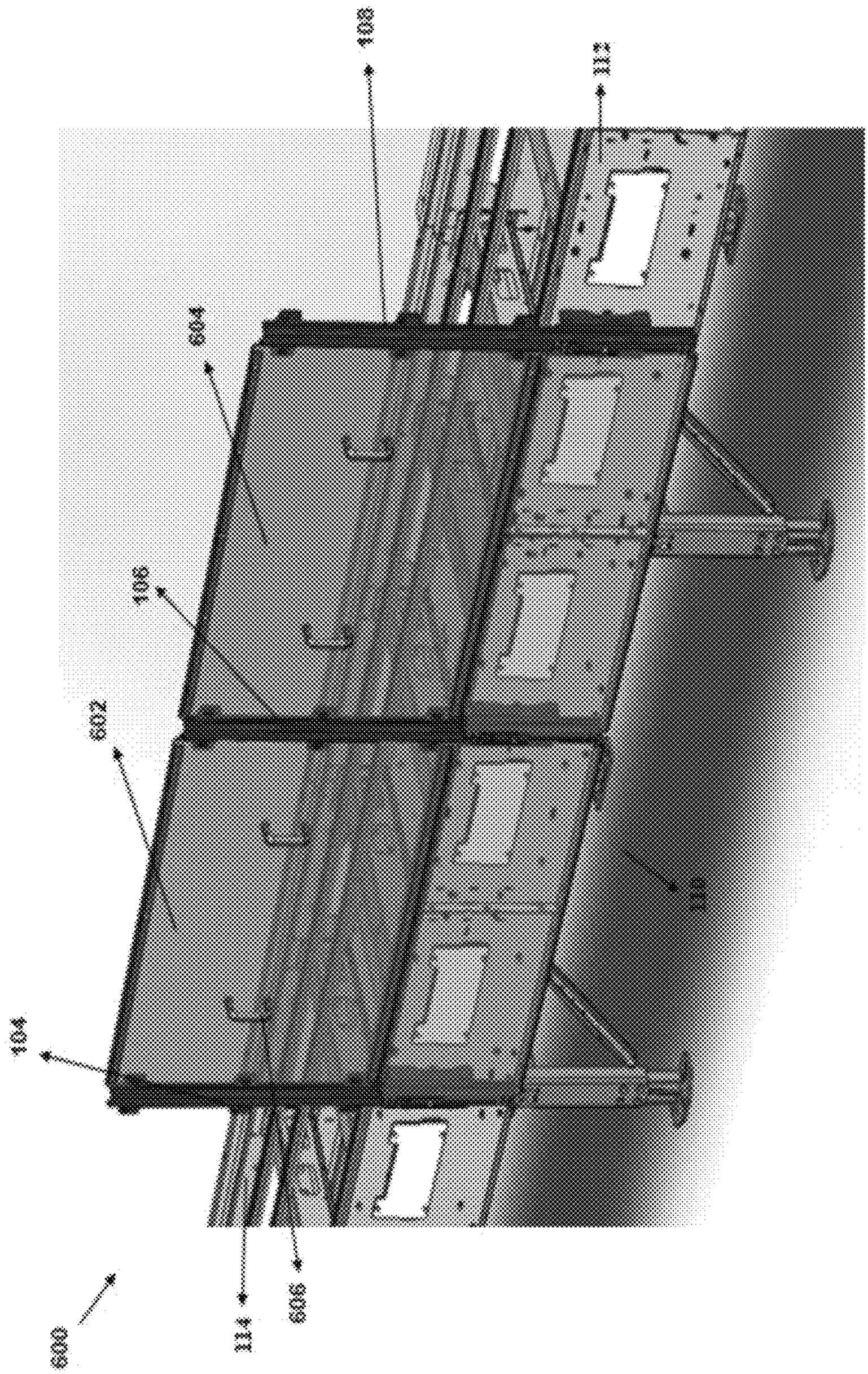

FIG. 6

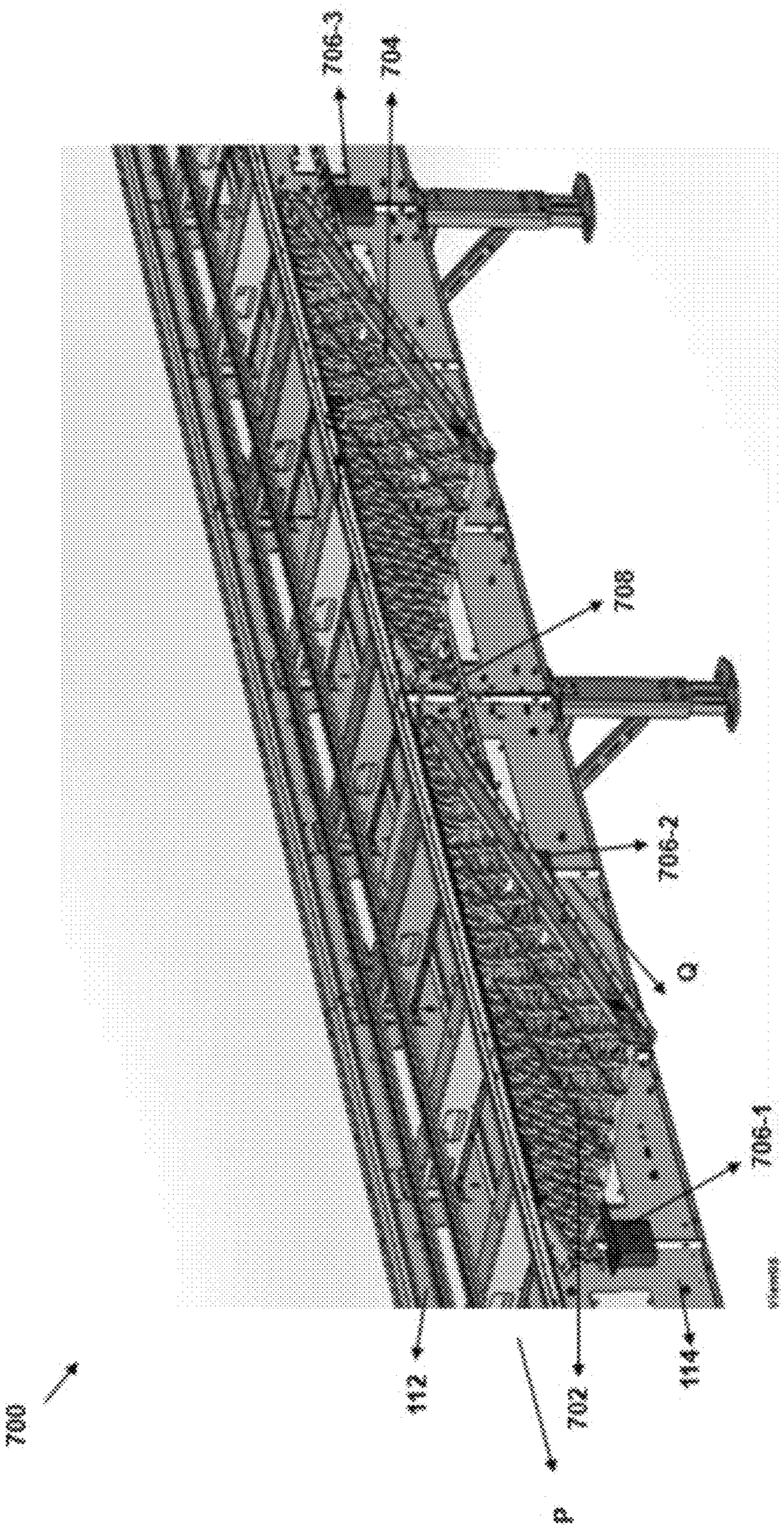

FIG. 7

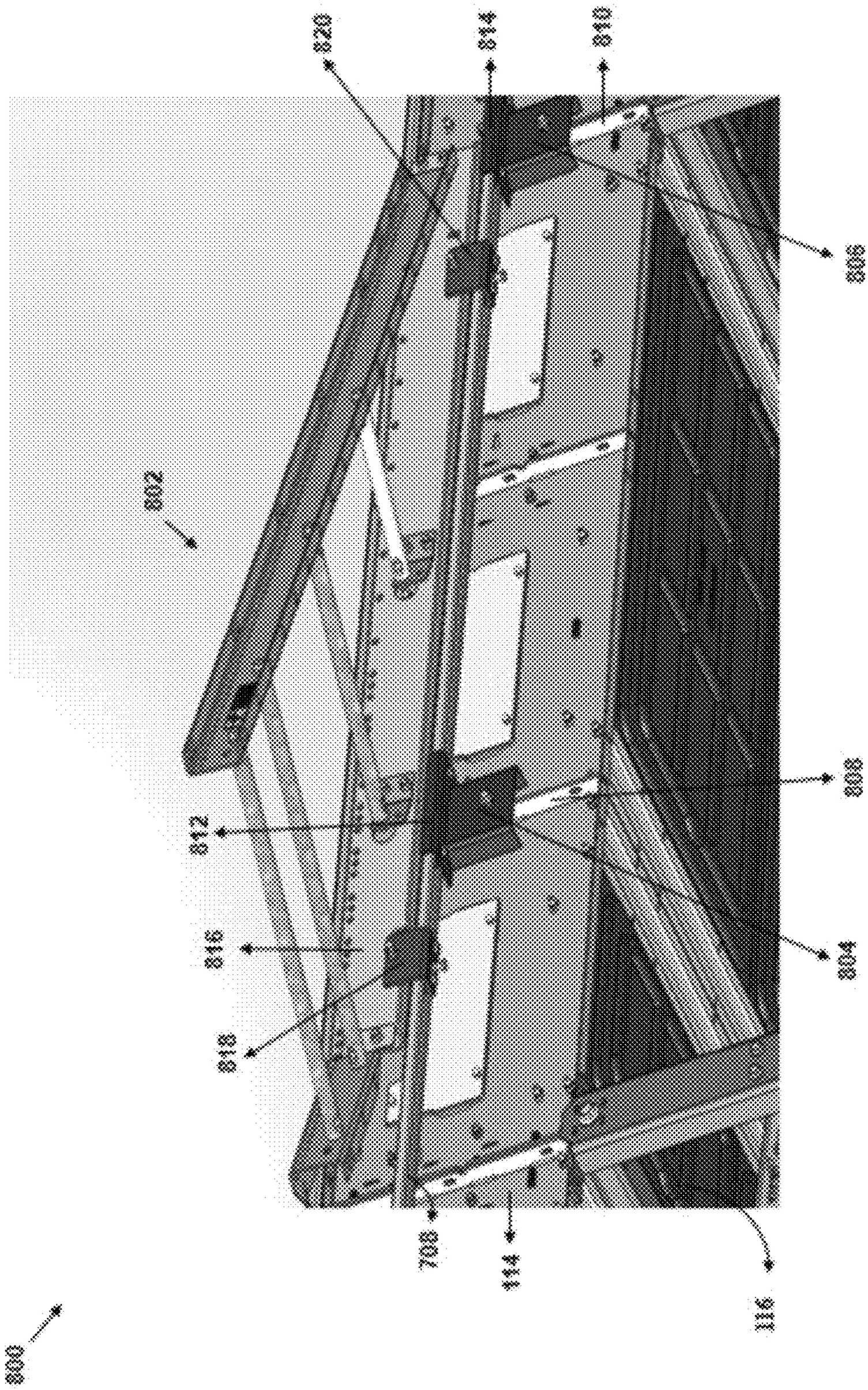

FIG. 8

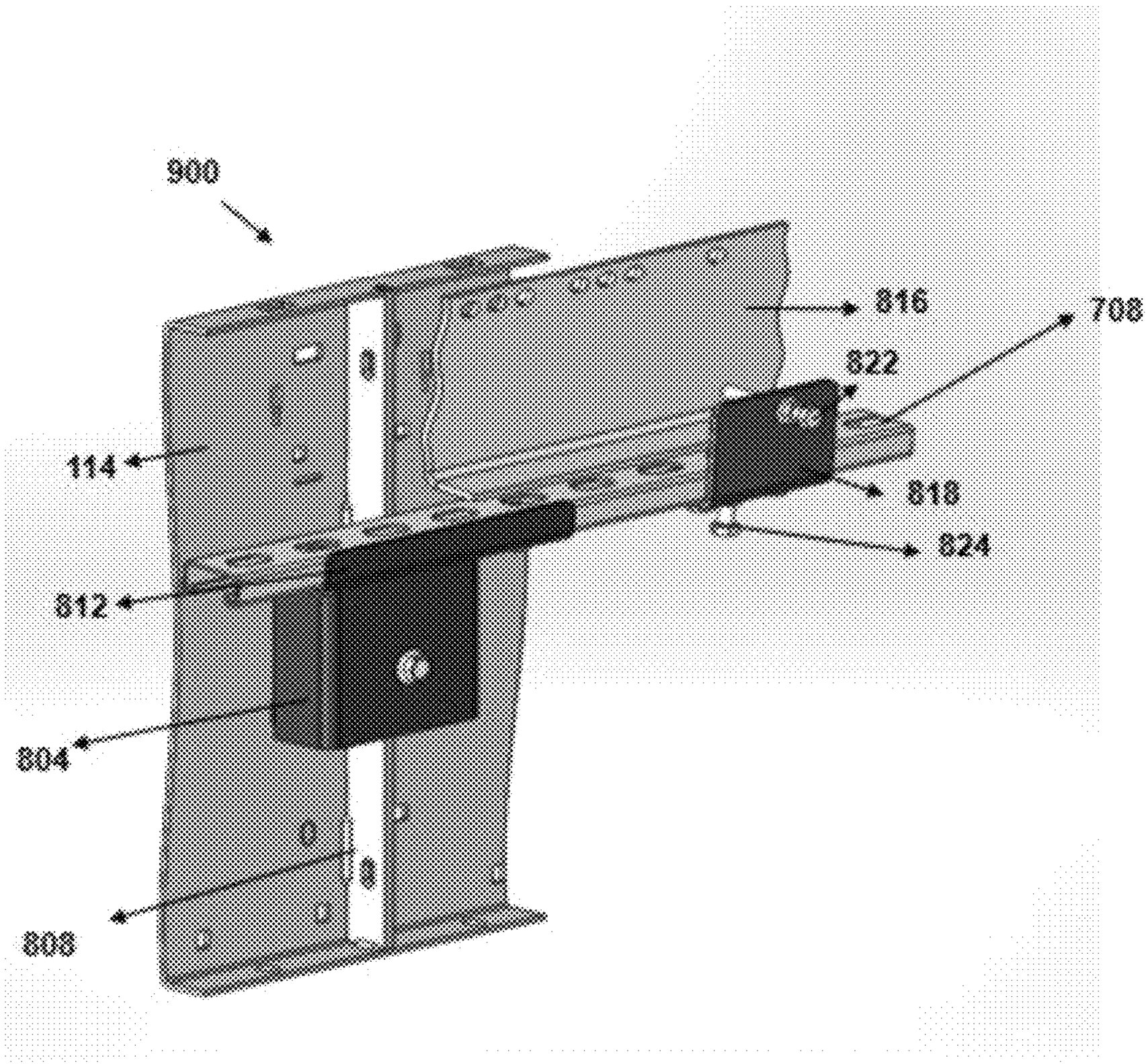

FIG. 9

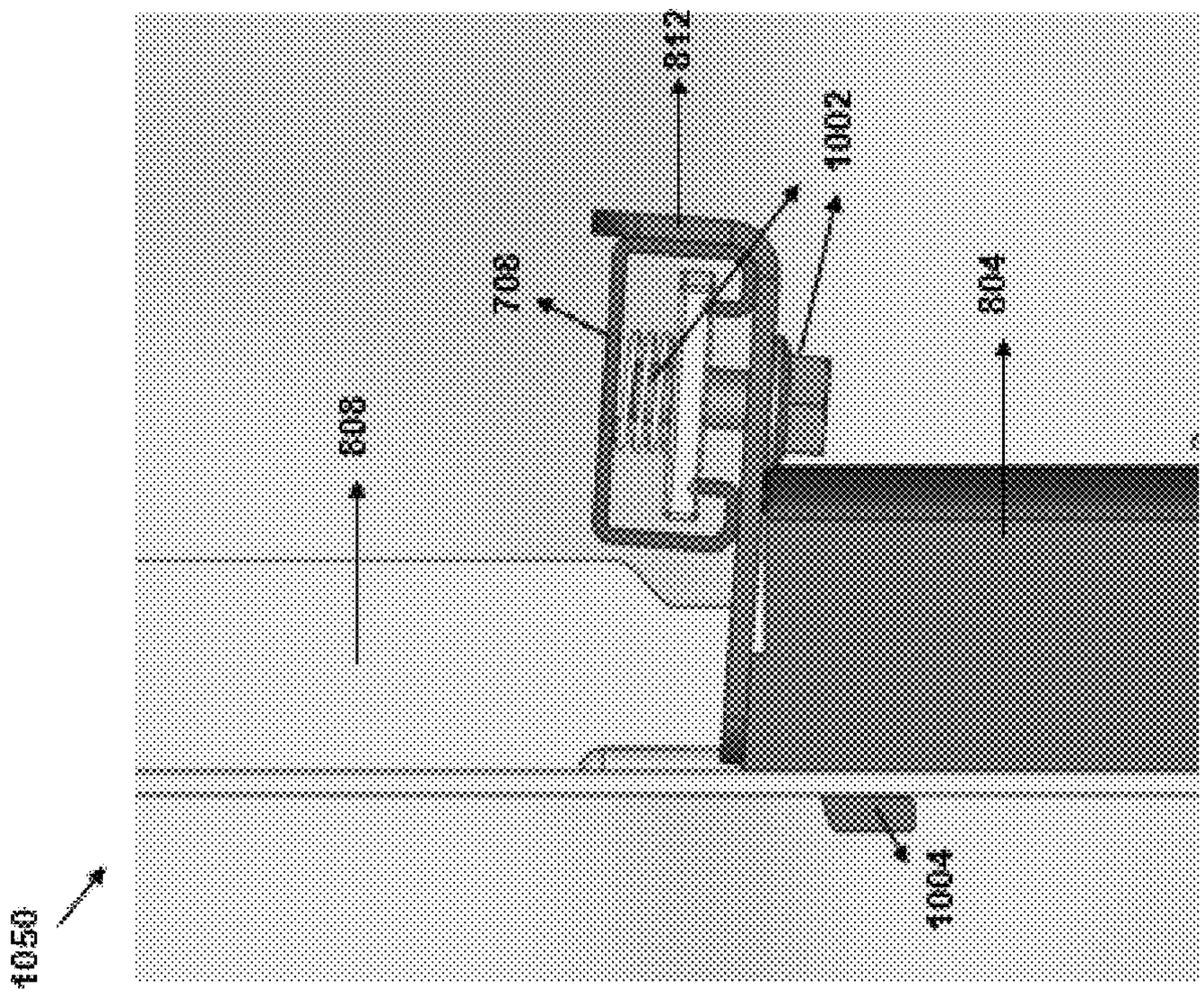

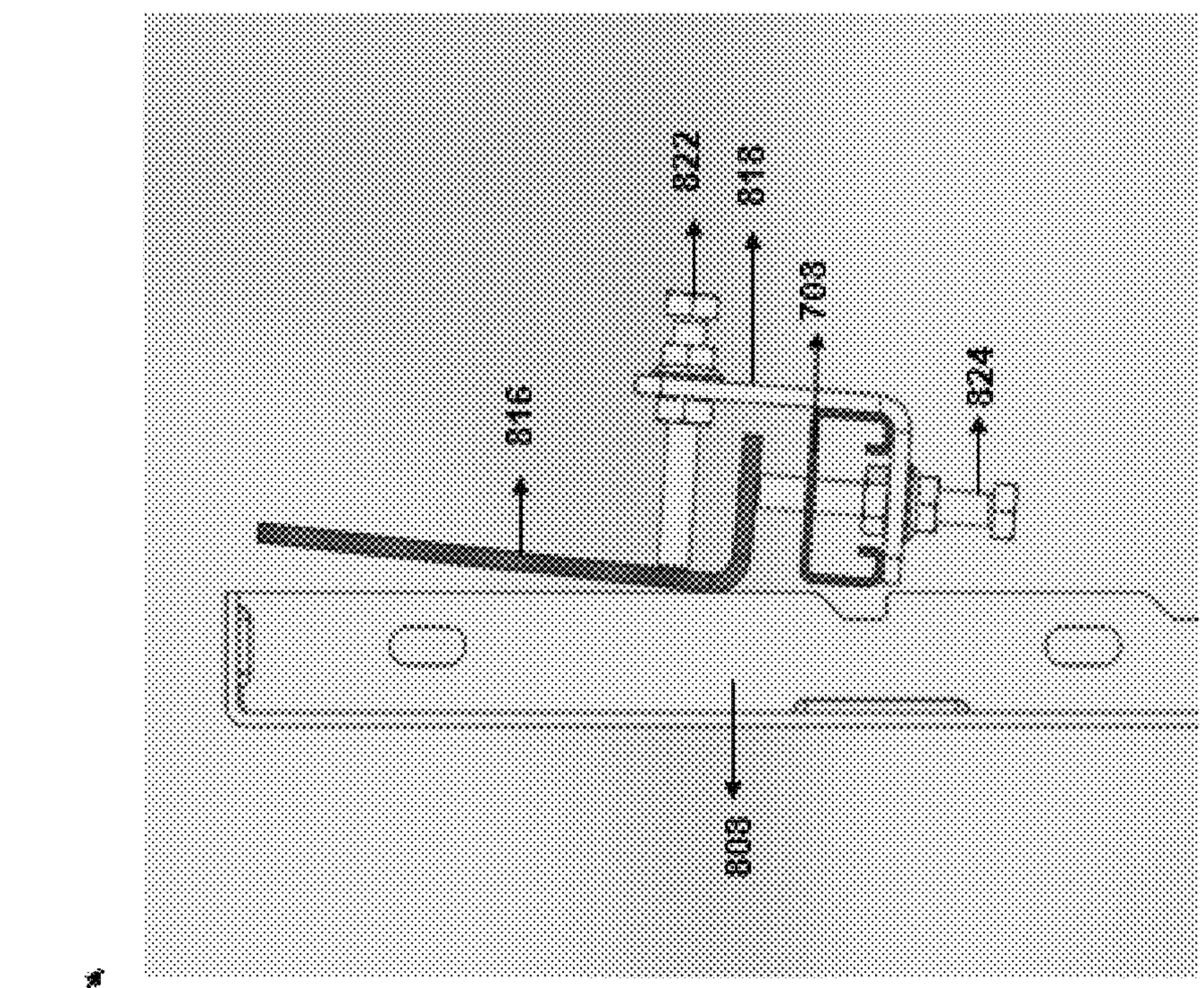

FIG. 10

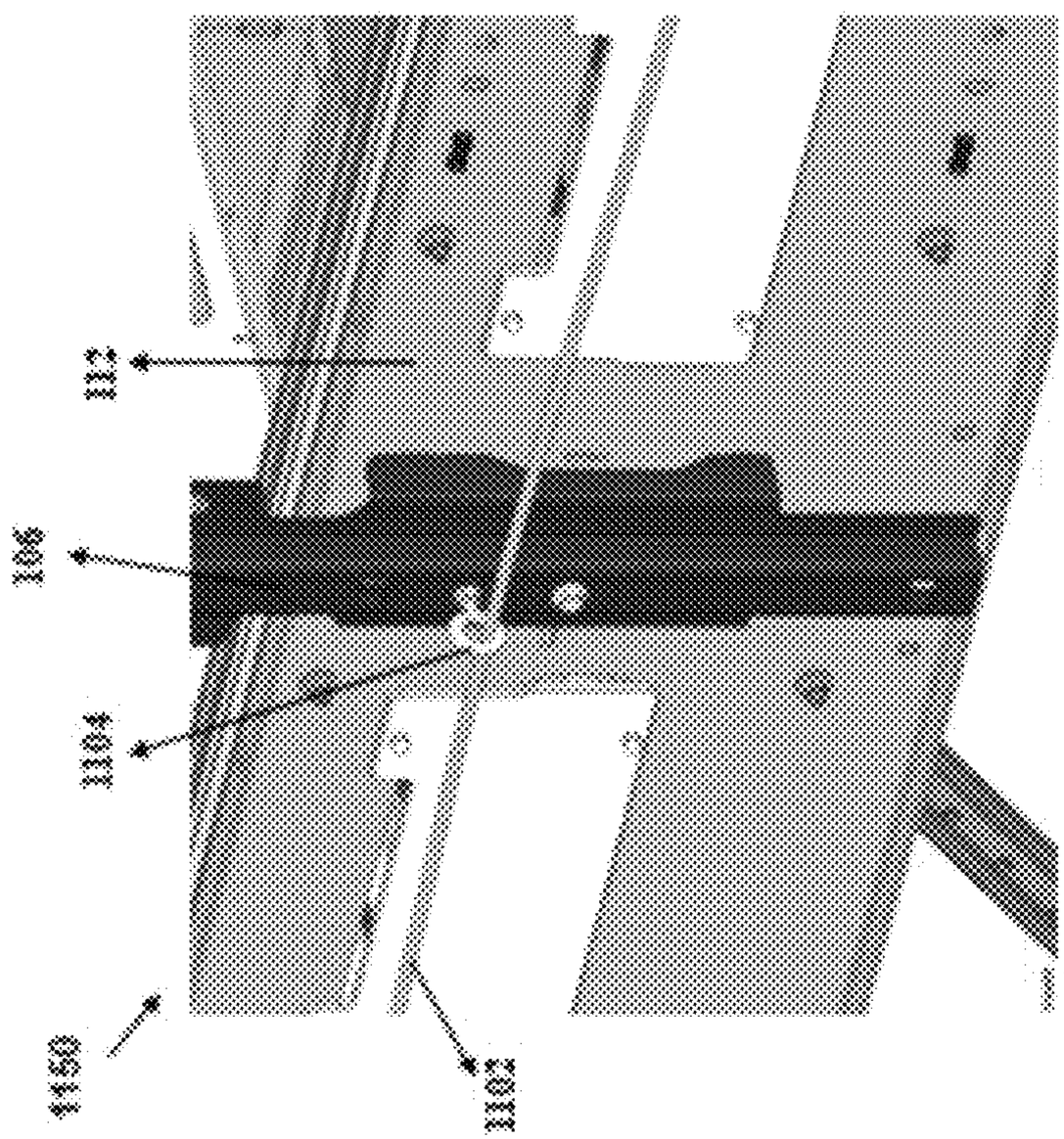

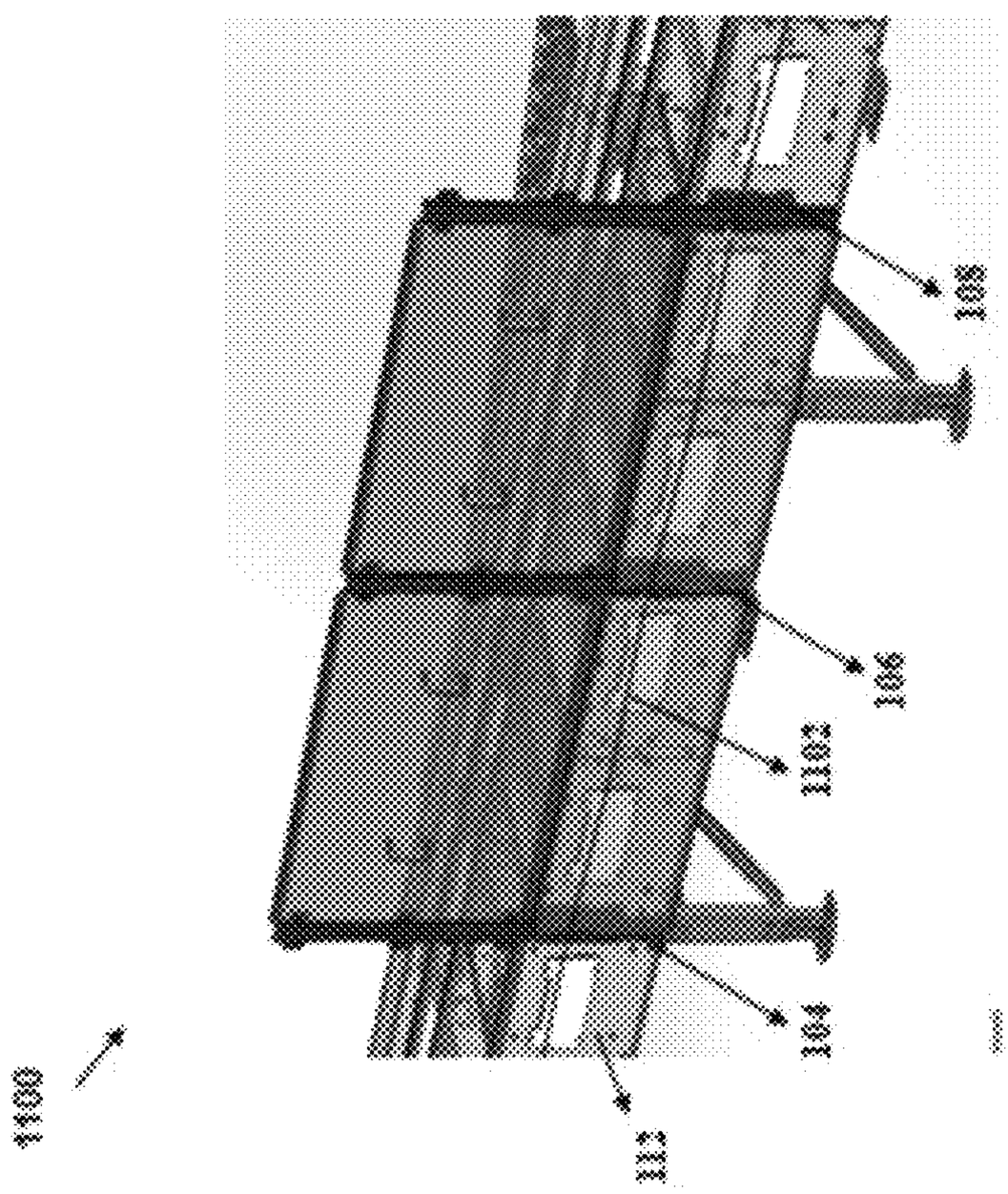

FIG. 11

CONVEYOR WITH A STANCHION FOR MOUNTING AN EQUIPMENT ON THE CONVEYOR

TECHNOLOGICAL FIELD

Example embodiments described herein relate generally to a conveyor comprising a stanchion for mounting equipment on the conveyor, and, more particularly, to a stanchion that can be mounted on a conveyor frame of the conveyor.

BACKGROUND

Generally, in material handling environments like, but not limited to, distribution centers, warehouses, inventories, or shipping centers, a material handling system, can convey, handle, sort, and organize various type of items (e.g. cartons, cases, containers, shipment boxes, totes, packages, and/or the like) at high speeds on a conveyor. In some examples, conveyors can include a roller conveyor bed, or a conveyor belt mounted between two sides of a conveyor frame. In some examples, the conveyor can correspond to a shoe sorter that can comprise, or rail guides mounted between the two sides of the conveyor frame. Typically, to mount various components and/or assembly (e.g., but not limited to, a safety panel, a drive pulley, a divert unit, etc.) the conveyor frame is designed to include one or more slots, apertures, and/or mounting members. To this end, mounting one or more components on the conveyor frame has associated challenges.

SUMMARY

The following presents a simplified summary to provide a basic understanding of some aspects of the disclosed material handling system. This summary is not an extensive overview and is intended to neither identify key or critical elements nor delineate the scope of such elements. Its purpose is to present some concepts of the described features in a simplified form as a prelude to the more detailed description that is presented later.

Various example embodiments described herein relate to a conveyor. The conveyor can comprise a conveyor frame that includes a slot and a notch. In this regard, the slot can be defined on a first portion of the conveyor frame and the notch can be defined on a second portion of the conveyor frame. Further, the conveyor frame can comprise a stanchion that can be configured to be mounted on the conveyor frame. In some examples, the stanchion can comprise, a hook adapted to pass through the slot of the conveyor frame and a surface that can define an aperture. In this regard, the aperture on the surface can be adapted to enable a bolt to pass through the stanchion and insert into the notch in the second portion of the conveyor frame.

In some example embodiments, the stanchion can be configured to be fixedly mounted on the conveyor frame based on at least an engagement of the hook of the stanchion with the slot of the conveyor frame and fastening of the bolt through the stanchion engaged on the conveyor frame.

In some example embodiments, the second portion of the conveyor frame is a cross-bar that extends across a side of the conveyor frame.

According to some example embodiments, the bolt can be fastened through the stanchion engaged to the conveyor frame so that a distal end of the bolt abuts against a locking end defined by the notch.

In some example embodiments, the stanchion can comprise, a first portion that defines the hook. Further, the stanchion can comprise a second portion and a third portion defined between the first portion and the second portion. In some examples, the third portion is defined to protrude out from a plane defined by the first portion and the second portion and can comprise the surface that defines the aperture.

According to some example embodiments, the conveyor frame can comprise, a first slot, a second slot, a third slot, and a fourth slot. In this regard, in some examples, the stanchion can comprise, a first portion that defines a first hook and a second hook. To this end, the first hook and the second hook can be adapted to engage with the first slot and the second slot, respectively, of the conveyor frame. According to some example embodiments, the stanchion further can comprise, the second portion that defines a third hook and a fourth hook. In this regard, the third hook and the fourth hook can be adapted to engage with the third slot and the fourth slot respectively, of the conveyor frame.

According to some example embodiments, the stanchion can further comprise, an equipment mounting slot adapted to enable an engagement of a safety guard panel on the conveyor frame.

In some example embodiments, the stanchion can further comprise, an equipment mounting that can be adapted to enable an engagement of a divert unit of the conveyor on the conveyor frame. Some example embodiments described herein relate to a stanchion that can be configured to be mounted on a conveyor frame of a conveyor. The stanchion can comprise, a longitudinal post that can be defined between a first end and a second end. The longitudinal post can comprise, a first portion that can define a first hook and a second portion that can define a second hook. Further, the longitudinal post can comprise, a third portion that can be defined between the first portion and the second portion so that the third portion protrudes out from a plane defined by the first portion and the second portion. Furthermore, in some examples, the third portion can define an aperture adapted to enable a bolt to pass through from the aperture and insert into a member of the conveyor frame, thereby, engaging the stanchion on the conveyor frame.

According to some example embodiments, a shape of the first hook and the second hook of the stanchion can complement to a shape of a first slot and a second slot of the conveyor frame, thereby supporting an engagement of the first hook into the first slot and an engagement of the second hook into the second slot of the conveyor frame.

In an example embodiment, the stanchion can further comprise, an equipment mounting slot that can be adapted to enable an engagement of a safety guard panel on the conveyor frame.

In another example embodiment, the stanchion can further comprise, an equipment mounting slot that can be adapted to enable an engagement of a divert unit of the conveyor on the conveyor frame.

According to some example embodiments, the stanchion can be configured to be fixedly mounted on the conveyor frame based on at least: an engagement of the first hook into a first slot of the conveyor frame, an engagement of the second hook into a second slot of the conveyor frame and fastening of the bolt through the stanchion engaged on the conveyor frame.

In some example embodiments, the bolt can be fastened through the stanchion engaged to the conveyor frame so that a distal end of the bolt abuts against a locking end defined by the member of the conveyor frame.

Some example embodiments described herein relate to a stanchion for mounting equipment on a conveyor frame. The stanchion can comprise, a first portion that can comprise a hook adapted to pass through a slot of the conveyor frame, thereby engaging the stanchion on the conveyor frame. Further, the stanchion can comprise a protruded portion that can define an aperture adapted to enable a bolt to pass through the aperture and abut with a member of the conveyor frame, thereby fixedly mounting the stanchion with the conveyor frame.

In some example embodiments, the stanchion can further comprise, the first portion that defines the first hook and a second hook. In this regard, in some examples, the first hook and the second hook can be adapted to engage with a first slot and a second slot of the conveyor frame. Further, the stanchion can comprise, a second portion that defines a third hook and a fourth hook. In this regard, the third hook and the fourth hook can be adapted to engage with a third slot and a fourth slot of the conveyor frame.

According to some example embodiments, the protruded portion of the stanchion can be defined between the first portion and the second portion of the stanchion. In this regard, in some examples, the protruded portion of the stanchion protrudes out relative to a plane defined by the first portion and the second portion of the stanchion.

According to some example embodiments, at least one of the first portion and the second portion further defines, an equipment mounting slot adapted to enable an engagement of a safety guard panel on the conveyor frame.

According to some example embodiments, the stanchion can be configured to be fixedly mounted on the conveyor frame based on at least, an engagement of the hook with the slot of the conveyor frame and fastening of the bolt so that the bolt may pass through the stanchion and abut at a notch defined at the conveyor frame.

In some example embodiments, the stanchion can further comprise, an equipment mounting adapted to enable an engagement of a divert unit of the conveyor on the conveyor frame.

The above summary is provided merely for purposes of summarizing some example embodiments to provide a basic understanding of some aspects of the disclosure. Accordingly, it will be appreciated that the above-described embodiments are merely examples and should not be construed to narrow the scope or spirit of the disclosure in any way. It will be appreciated that the scope of the disclosure encompasses many potential embodiments in addition to those here summarized, some of which will be further described below.

BRIEF DESCRIPTION OF THE DRAWINGS

The description of the illustrative embodiments can be read in conjunction with the accompanying figures. It will be appreciated that for simplicity and clarity of illustration, elements illustrated in the figures have not necessarily been drawn to scale. For example, the dimensions of some of the elements are exaggerated relative to other elements. Embodiments incorporating teachings of the present disclosure are shown and described with respect to the figures presented herein, in which:

FIG. **1** illustrates a perspective view of a conveyor comprising a stanchion, in accordance with some example embodiments described herein.

FIG. **2** illustrates an exploded view of the stanchion and a conveyor frame of the conveyor, in accordance with some example embodiments described herein.

FIG. **3** illustrates a perspective view of a section of the conveyor frame of the conveyor, in accordance with some example embodiments described herein.

FIG. **4** illustrates a perspective view of the stanchion mounted on the conveyor frame, in accordance with some example embodiments described herein.

FIG. **5** illustrates a side perspective view depicting the mounting of the stanchion on the conveyor frame, in accordance with some example embodiments described herein.

FIG. **6** is an example scenario illustrating a perspective view of safety panels mounted on stanchions of the conveyor, in accordance with some example embodiments described herein.

FIG. **7** is another example scenario illustrating a perspective view of take away spurs mounted on the conveyor using a plurality of stanchions of the conveyor, in accordance with some example embodiments described herein

FIG. **8** is a perspective view of a take away spur mounted on the conveyor by a plurality of stanchions, in accordance with some example embodiments described herein.

FIG. **9** illustrates a perspective view of a portion of the conveyor representing mounting of a spur mounting rail of the take away spur on a side frame of the conveyor, in accordance with some example embodiments described herein.

FIG. **10** illustrates a side view representing mounting of the spur mounting rail on a stanchion of the conveyor and an end view representing mounting of a spur mounting channel on a top member defined by the stanchion, in accordance with some example embodiments described herein.

FIG. **11** is another example scenario illustrating a first view representing a pull cord mounted on the plurality of stanchions of the conveyor and a second view representing an engagement of the pull cord on a hook mounted on a stanchion of the plurality of stanchions, in accordance with some example embodiments described herein

DETAILED DESCRIPTION

Some embodiments of the present disclosure will now be described more fully hereinafter with reference to the accompanying drawings, in which some, but not all embodiments of the disclosure are shown. Indeed, the disclosure may be embodied in many different forms and should not be construed as limited to the embodiments set forth herein; rather, these embodiments are provided so that this disclosure will satisfy applicable legal requirements. The terms "or" and "optionally" are used herein in both the alternative and conjunctive sense, unless otherwise indicated. The terms "illustrative" and "exemplary" are used to be examples with no indication of quality level. Like numbers refer to like elements throughout.

The components illustrated in the figures represent components that may or may not be present in various embodiments of the disclosure described herein such that embodiments may comprise fewer or more components than those shown in the figures while not departing from the scope of the disclosure.

In material handling environment (e.g. distribution centers, warehouses, inventories, shipment centers, and/or the like) that includes one or more conveyors, it is often desired to mount various components (e.g., but not limited to, take-away spurs, safety guards, panels, covers, chutes, safety pullcord guides, and other equipment) alongside on the conveyors (e.g. on base frame of the conveyor). Existing mechanisms for mounting such components on the conveyors are based on extensive pre-engineering or re-designing

of the conveyor frames. For instances, in some examples, the conveyor frames are pre-casted to have one or more slots and support features defined on the surface of the conveyor frames that can support mounting of such components to the conveyor frame. However, designing such conveyor frames has associated challenges and also adds to cost of overall manufacturing of a conveyor base. Also, such conveyor frames may not be utilized for reuse, i.e. to mount a component with a different geometry, shape, or utility.

Various example embodiments described herein relates to, techniques for mounting such components on the conveyor in a manner that enables: (a) such components to be mounted on the conveyor at a reduced cost and (b) future add-on components to be developed and mounted on the conveyor without requiring significant changes to existing components or existing design of the conveyor frames.

Turning now to the drawings, the detailed description set forth below in connection with the appended drawings is intended as a description of various configurations and is not intended to represent the only configurations in which the concepts described herein may be practiced. The detailed description comprises specific details for the purpose of providing a thorough understanding of various concepts with like numerals denote like components throughout the several views. However, it will be apparent to those skilled in the art that these concepts may be practiced without these specific details.

FIG. **1** illustrates a perspective view **100** of a conveyor **102** of a material handling environment. The conveyor **102** comprises, a conveyor base and a plurality of stanchions, for instance, a first stanchion **104**, a second stanchion **106**, and a third stanchion **108** mounted on the conveyor base. Illustratively, the conveyor base includes a conveyor frame **110** defined by at least, a first side frame **112**, a second side frame **112**, and a base frame **114**.

According to some example embodiments, the conveyor **102** corresponds to a sortation system (e.g. a shoe sorter) that can comprise guide rails **118** on which a divert unit (not shown) can be mounted. In this regard, in some example embodiments, the conveyor **102** can correspond to a sortation conveyor with pusher shoes (not shown) mounted on one of the guide rails **118**. Accordingly, in some examples, the conveyor **102** can correspond to the sortation conveyor comprising components that can operate based on some techniques as described in U.S. patent application no U.S. Ser. No. 12/014,922, entitled, "Sortation Conveyor", filed 16 Jan. 2008 and/or U.S. patent application no U.S. Ser. No. 15/147,475, entitled, "High-speed, dual-sided shoe sorter with offset induct", filed 5 May 2016, details of which are incorporated herein by reference.

Alternatively, in some example embodiments, the conveyor **102** can correspond to a roller bed conveyor. In this regard, the roller bed conveyor can include a conveying surface for conveying items that can be defined by a plurality of motor driven or non-motor driven rollers mounted between the first side frame **112** and the second side frame **114** of the conveyor frame **110**. Alternatively, in some example embodiments, the conveyor **102** can correspond to a belt conveyor comprising a plurality of conveyor belts mounted between the first side frame **112** and the second side frame **112** of the conveyor frame **110**. It may be understood, that mounting of the stanchions described hereinafter in accordance with various example embodiments, is not limited to sortation conveyors or roller bed conveyors, rather, in accordance with some example embodiments, the stanchions can be installed on conveyors of any type and/or on components in a material handling environment, for example, singulator conveyors, accumulators, and/or the like.

In accordance with various example embodiments described herein, the plurality of stanchions, i.e. the first stanchion **104**, the second stanchion **104**, the third stanchion **106**, can be mounted on the conveyor frame **110** at predefined distances between each other depending on a utility (e.g., but not limited to, a size of an equipment to be mounted on the conveyor **102**). For instance, as illustrated, the first stanchion **104** and the second stanchion **106** can be mounted on the conveyor **102** a defined distance D from each other. To this end, in some examples, a security panel (i.e. a window that guards and prevents access to the conveyor **102** in operation) can be mounted between the two stanchions (e.g. the first stanchion **104** and the second stanchion **106**) installed on the conveyor frame **110**. Further examples of mounting an equipment on the stanchion are described in reference to FIG. **6**.

Although, FIG. **1** illustrates the stanchions (**104**, **106**, and **108**) mounted on one side frame (i.e. the first side frame **112**) of the conveyor frame **110**, however, in some other example embodiments, similar stanchions can be mounted on the other side of the conveyor frame **110**, i.e. the second side frame **114** also. Said differently, in some example embodiments, the conveyor **102** can comprise multiple stanchions mounted on both sides, i.e. on the first side frame **112** and the second side frame **114** of the conveyor frame **110**.

FIG. **2** illustrates an exploded view **200** of the stanchion **104** and a section **202** of the conveyor frame **110** of the conveyor **102**, in accordance with some example embodiments described herein. Illustratively, the stanchion **104** can be of a shape like a longitudinal post, a molded piece of metal sheet, and/or the like, that can comprise three portions, e.g. a first portion **204**, a second portion **206**, and a third portion **208**. In this regard, in some examples, the first portion **204** can be defined between a first end **210** and a second end **212**. Similarly, the second portion **206** can be defined between a third end **214** and a fourth end **216** of the stanchion **104**. Further, the third portion **208** can be defined between a fifth end **218** and a sixth end **220** of the stanchion **104**. As illustrated, the third portion **208** can be defined so as to protrude out in a direction X from a plane defined by the first portion **204** and the second portion **206** of the stanchion **104**. For the purpose of brevity, the third portion **208** of the stanchion **110** can be interchangeably referred hereinafter, as a protruded portion at some places in this description.

In accordance with some example embodiments described herein, the stanchion **104** can define one or more hooks. In this aspect, the hooks of the stanchion **104** can be adapted to engage with respective slots defined on the conveyor frame **110**. To this end, an engagement of a hook of the stanchion **104** on a slot of the conveyor frame **110** engages the stanchion **104** to the conveyor frame **110**. For instance, according to some example embodiments, the first portion **204** of the stanchion **104** can define a first hook (not shown) and a second hook (not shown). Further, the second portion **206** of the stanchion **104** can define a third hook **240** and a fourth hook **242**. In this regard, according to the example embodiments, a shape of the first hook the second hook, the third hook **240**, and the fourth hook **242** of the stanchion **104** can be such that, it complements to a shape of respective slots on the conveyor frame **110**. Furthermore, according to some example embodiments, a surface **222** of the third portion **208** of the stanchion **104** can define at least one aperture **224**. In this regard, the aperture **224** can be

adapted to enable a bolt **226** to pass through the stanchion **104**. To this end, in some examples, the bolt **226** when passed through the aperture **224** can threads into the stanchion **104**. In some examples, the bolt **226** when passed through the aperture **224** can insert into a notch **228** defined on the section **202** of the conveyor frame **110**, thereby fixedly mounting the stanchion **104** on the conveyor frame **110**.

Referring to FIGS. **2** and **3**, the section **202** of the conveyor frame **110** on which the stanchion **104** can be mounted, is illustrated. According to some example embodiments, the section **202** of the conveyor frame **110** can correspond to a portion of the first side frame **112** of the conveyor frame **110** (as illustrated and described in FIG. **1**). Illustratively, the section **202** of the conveyor frame **110** can be defined between a top end **227** and a bottom end **230** of the first side frame **112**. In some example embodiments, the section **202** of the first side frame **112** can comprise: (i) a wall surface of the first side frame **112**, (ii) a first member **232** and a second member **234** that extends out from the top end **227** and the bottom end **230** of the wall surface of the first side frame **112**, and (iii) a cross-bar member **236**. As illustrated, the cross-bar member **236** can be mounted between ends **304** and **306** of the first member **232** and the second member **234** respectively and extends out at a defined angle relative to the wall surface of the first side frame **112**. Further, the cross-bar member **236** of the first side frame **112** can define at least one notch **228** comprising a locking end **238**.

As illustrated in FIGS. **2** and **3**, the section **202** of the conveyor frame **110** can define a first slot **244**, a second slot **246**, a third slot **248**, and a fourth slot **250**, respectively. In this regard, according to some examples, a shape of, the first hook the second hook, the third hook **240**, and the fourth hook **242** of the stanchion **104** complements to a shape of the first slot **244**, the second slot **246**, the third slot **248**, and the fourth slot **250** respectively. Said differently, the first slot **244**, the second slot **246**, the third slot **248**, and the fourth slot **250** of the conveyor frame **110** can be defined so as to enable passing through of the first hook, the second hook, the third hook **240**, and the fourth hook **242** into the respective slots, thereby supporting an engagement of hooks of the stanchion **104** into respective slots on the conveyor frame **110**.

In some example embodiments, to engage the stanchion **104** over the section **202** of the conveyor frame **110**, the stanchion **104** can be positioned over the section **202** of the conveyor frame **110** so that, the third portion **208** (i.e. protruded portion) defined by the stanchion **104** can be positioned over the cross-bar member **236** of the conveyor frame **110**. In this regard, the stanchion **104** can be positioned over the section **202** so that the first hook can be inserted into the first slot **244**, the second hook can be inserted into the second slot **246**, the third hook **240** can be inserted into the third slot **248**, and the fourth hook **242** can be inserted into the fourth slot **250**.

FIG. **4** illustrates a perspective view **400** that represents the stanchion **104** mounted on section **202** of the conveyor frame **110**, in accordance with some example embodiments described herein. In some examples, the stanchion **104** can be configured to be fixedly mounted on section **202** of the conveyor frame **110**, thereby supporting mounting of additional equipment on the conveyor **102**. According to some example embodiments, the stanchion **104** can be mounted on section **202** based on at least, (i) an engagement of a hook of the stanchion **104** with a slot of the conveyor frame **110** and (ii) fastening of the bolt **226** through the stanchion **104** engaged on the conveyor frame **110**. In this regard, in some example embodiments, as described in FIG. **3**, the stanchion **104** can be positioned over the section **202** of the conveyor frame **110** such that, one or more hooks of the stanchion **104** can slidably move into respective slots defined on section **202** of the conveyor frame **110**. For example, FIG. **4** illustrates, a first section **402** representing an engagement of the third hook **240** of the stanchion **104** into the third slot **248**, a second section **404** representing another engagement of the fourth hook **242** of the stanchion **104** into the fourth slot **250**, and a third section **404** representing another engagement of the bolt **226** into the aperture **224** of the stanchion **104**. Further details of mounting of the stanchion **104** on the conveyor frame **110** are described in reference to FIG. **5**

FIG. **5** illustrates a side perspective view **500** depicting the stanchion **104** mounted on the section **202** of the conveyor frame **110**, in accordance with some example embodiments described herein. As said before, in accordance with some example embodiments described herein, the stanchion **104** can be fixedly mounted on the conveyor frame **110** based on at least: (i) an engagement of at least one hook of the stanchion **104** into a respective slot of the conveyor frame **110** and (ii) fastening of the bolt **226** through the stanchion **104** engaged on the conveyor frame **110**. For instance, the side perspective view **500** illustrates, an engagement of: (a) the third hook **240** of the stanchion **104** into the third slot **248** of the conveyor frame **110** and (b) the fourth hook **242** of the stanchion **104** into the fourth slot **250** of the conveyor frame **110**.

As described before in reference to FIG. **2**, the stanchion **104** defines the aperture **224** that can be adapted to enable the bolt **226** to pass through the stanchion **104** and abut with the cross-bar member **236** of the conveyor frame **110**. In some examples, the bolt **226** can thread into the stanchion **104** as the bolt **226** is passed through the aperture **224**. Having said that, the side perspective view **500** also illustrates, the bolt **226** fastened over the stanchion **110**. In this regard, according to some examples, the bolt **226** can be passed through the aperture **224** of the stanchion **104** and can be fastened over the stanchion **104**, so that: (a) a crown defined by a proximal end **502** of the bolt **226** abuts to the surface **222** of the stanchion **110** and (b) a distal end **504** of the bolt **226** can be received into the notch **228** of the cross-bar member **236**. Fastening the bolt **226** over the stanchion **104** can cause the distal end **504** of the bolt **226** to slidably move within a cavity defined by the notch **228**. To this end, in some examples, the bolt **226** can be fastened over the stanchion **119**, until the distal end **504** of the bolt **226** abuts against the locking end **238** defined by the notch **228**, thereby fixedly mounting the stanchion **110** on section **202** of the conveyor frame **110**.

FIG. **6** illustrates a perspective view **600** of one or more equipment mounted on stanchions (**104**, **106**, and **108**) of the conveyor **102**, in accordance with some example embodiments described herein. Illustratively, the conveyor **102** comprises, the first stanchion **104**, the second stanchion **106**, and the third stanchion **108** mounted on the conveyor frame **110** of the conveyor **102**. The stanchions **104**, **106**, and **108** can be mounted on the conveyor frame **110** in a similar manner as described in FIGS. **4-5**. Illustratively, a first safety guard panel **602** can be mounted on the conveyor **102** between the first stanchion **104** and the second stanchion **106** on the conveyor **102**. Further, a second safety guard panel **604** can be mounted between the second stanchion **106** and the third stanchion **108** on the conveyor **102**. In some examples, the first safety guard panel **602** and the second

safety guard panel **604** can comprise one or more handles **606** that can be used for handling the safety guard panels **602** and **604** while the panels are mounted between two stanchions.

According to some example embodiments, each of the first stanchion **104**, the second stanchion **106**, and the third stanchion **108** can comprise one or more engagement slots (e.g. similar to the engagement slot **252** illustrated in FIG. **2**) that can support mounting of the equipment on the conveyor **102**. In this regard, according to some example embodiments, the first safety guard panel **602** and the second safety guard panel **604** can also comprise one or more slots that can be defined of a shape that compliments with a shape of the engagement slots (e.g. the engagement slot **252**) of the stanchions **104**, **106**, and **108**. To this end, in some examples, the safety guard panels **602** and **604** can be mounted between two stanchions using a nut and bolt-based engagement assembly. For instance, in some example embodiments, for mounting the safety guard panel **602** between the stanchions **104** and **106**, one or more bolts may be passed through respective slots of the safety guard panel **602** and further through the respective engagement slots of the stanchions **104** and **106**. Further, one or more nuts can be fastened over the respective bolts engaging the safety guard panel **602** between the stanchions **104** and **106**.

Although not illustrated, however, in some example embodiments, the stanchions **104**, **106**, and **108** can be configured to support mounting of a divert path on the conveyor **102**. The path referred herein corresponds to a conveyor path on which the items can be diverted from the conveyor **102** (e.g. a shoe sorter). In this regard, the engagement slots (e.g. the engagement slot **252**) of the stanchions **104**, **106**, and **108** can be adapted to support mounting of the divert unit on the conveyor **103**. Further, according to some example embodiments described herein, the stanchions **104**, **106**, and **108** can also support mounting of components like take-away spurs, safety guards, panels, covers, chutes, safety pullcord guides, and other equipment on the conveyor **102**.

FIG. **7** is another example scenario illustrating a perspective view **700** of take away spurs (**702**, **704**) mounted on the conveyor **102** using a plurality of stanchions of the conveyor **102**, in accordance with some example embodiments described herein. Illustratively, the conveyor **102** comprises the plurality of stanchions (**706-1**, **706-2**, **706-3**) that can be configured for mounting the take away spurs (**702**, **704**) on the second side frame **114** of the conveyor **102**. In this regard, the stanchions (**706-1**, **706-2**, and **706-3**) can support positioning of a mounting channel **708** on which a spur mounting rail (not shown) of the take away spurs (**702**, **704**) can be mounted. Further details of mounting of the take away spurs (**702**, **704**) are described in reference to FIG. **8**. In accordance with some example embodiments, the take away spurs (**702**, **704**) referred herein, can be configured to receive one or more articles that may be diverted (e.g. laterally) to move in a direction Q from a direction of conveyance P of the conveyor **102**.

FIG. **8** is a perspective view **800** of a take away spur **802** mounted on the conveyor **102** by a plurality of stanchions (**804**, **806**), in accordance with some example embodiments described herein. As illustrated, the plurality of stanchions (**804**, **806**) can be mounted on respective cross-bar members (**808**, **810**) defined on the second side frame **114** of the conveyor **102**. For instance, the stanchion **804** can be mounted on the cross-bar member **808** and the stanchion **806** can be mounted on the cross-bar member **810** (in a similar fashion as described with reference for stanchion **104** in FIGS. **2-5**). Further, in some example embodiments, each of the stanchions **804**, **806** can define a respective top member **812** and **814** that can be configured to receive the spur mouting channel **708**. In this regard, in some example embodiments, upon positioning the mounting channel **708** on the top members **812**, **814**, the mounting channel **708** can be engaged with the top members **812**, **814** using channel spring nuts and bolts (not shown), thereby fixing the spur mounting channel **708** on the stanchions (**804**, **806**). Further, in some example embodiments, a spur mounting rail **816** of the take away spur **802** can be mounted on the mounting channel **708** using spur mounting clips **818**, **820**. Details of the spur mounting rail **816**, the spur mounting clips **818**, **820**, and the spur mounting channel **708** are described in reference to FIGS. **9-10**.

FIG. **9** illustrates a perspective view **900** of a portion of the conveyor **102** representing mounting of the spur mounting rail **816** on the second side frame **114** of the conveyor **102**. Illustratively, the top member **812** defined by the stanchion **808** can receive the spur mounting channel **708**. In this regard, in some example embodiments, the spur mounting channel **708** can be mounted with the stanchion **804** using channel spring nuts and hex bolts (not shown). Mounting of the spur mounting channel **708** on the top member **812** defined by the stanchion **808** is illustrated in FIG. **10**. In accordance with some example embodiments, a frame of the take away spur **802** can comprise the spur mounting rail **816**. In this regard, as illustrated, the spur mounting rail **816** of the take away spur **802** can be positioned over the spur mounting channel **708**. Further, in some example embodiments, upon positioning the spur mounting rail **816** on the spur mounting channel **708**, the spur mounting clip **818** can be positioned against the spur mounting channel **708** and fastened using channel nuts (**822**, **824**) and hex bolts, thereby fixing the spur mounting clip **818** on the spur mounting channel **708** and the spur mounting rail **816** between the spur mounting clip **818** and the second side rail **114**. Further details of mounting of the spur mounting clip **818** on the spur mounting channel **708** are described in reference with FIG. **10**.

FIG. **10** illustrates a side view **1000** representing mounting of the spur mounting rail **816** between the cross-member bar **808** (e.g. defined by the second side rail **114** described in FIG. **1**) and the spur mounting clip **818**, in accordance with some example embodiments described herein. FIG. **10** also illustrates an end view **1050** representing mounting of the spur mounting channel **708** on the top member **812** defined by the stanchion **804**, in accordance with some example embodiments described herein.

Referring to the side view **1000**, the spur mounting channel **708** is positioned on the top member **812** defined by the stanchion **804** and supports the spur mounting rail **816**. In this regard, in some example embodiments, the spur mounting rail **816** can be fixedly mounted between the spur mounting clip **818** and the cross-bar member **808** defined by the second side rail **114** based on fastening by the channel bolts (**822**, **824**) and hex bolts. In some example embodiments, an angle at which the take away spur **802** can be mounted relative to the second side frame **114** of the conveyor **102**, can be adjusted based on fastening of one or more lock nuts over the channel bolts (**822**, **824**).

Referring to the end view **1050**, the spur mounting channel **708** can be mounted on the top member **812** defined by the stanchion **804** using channel spring nut **1002**. Illustratively, the end view **1050** also illustrates an engagement

of a hook **1004** of the stanchion **804** in a respective slot on the cross-bar member **808** of the second side frame **114** of the conveyor **102**.

In some example embodiments, the stanchions (**104**, **106**, **108**, **706-1**, **706-2**, **706-3**, **804**, **806**) as described in the description can be configured to support mounting of a pull cord of the conveyor **102**. FIG. **11** is another example scenario illustrating a first view **1100** representing a pull cord **1102** mounted on the stanchions (**104**, **106**, **108**) of the conveyor **102** and a second view **1150** representing engagement of the pull cord **1102** on a hook **1104** mounted on a pull cord bracket defined by the stanchion **106**, in accordance with some example embodiments described herein. In some example embodiments, the pull cord **1102** may be connected to a switch (not shown) that can be actuated by pulling the pull cord **1102** to stop an ongoing operation of the conveyor **102**.

Thus, in accordance with various example embodiments, the stanchions (**104**, **106**, **108**, **706-1**, **706-2**, **706-3**, **804**, **806**) can be mounted on the side frames of the conveyor **102** and can be further configured to mount a plurality of components (e.g., but not limited to, the take away spurs **704**, **704 802**, pull cord **1102**, safety panels **602**, **604**) as described in various example embodiments herein. It may be noted that, as used in this specification and the appended claims, the singular forms "a," "an" and "the" comprise plural referents unless the content clearly dictates otherwise.

References within the specification to "one embodiment," "an embodiment," "embodiments", or "one or more embodiments" are intended to indicate that a particular feature, structure, or characteristic described in connection with the embodiment is comprised in at least one embodiment of the present disclosure. The appearance of such phrases in various places within the specification are not necessarily all referring to the same embodiment, nor are separate or alternative embodiments mutually exclusive of other embodiments. Further, various features are described which may be exhibited by some embodiments and not by others.

It should be noted that, when employed in the present disclosure, the terms "comprises," "comprising," and other derivatives from the root term "comprise" are intended to be open-ended terms that specify the presence of any stated features, elements, integers, steps, or components, and are not intended to preclude the presence or addition of one or more other features, elements, integers, steps, components, or groups thereof.

Detailed embodiments are disclosed herein; however, it is to be understood that the disclosed embodiments are merely exemplary, which may be embodied in various forms. Therefore, specific structural and functional details disclosed herein are not to be interpreted as limiting, but merely as a basis for the claims.

While it is apparent that the illustrative embodiments described herein disclosed fulfill the objectives stated above, it will be appreciated that numerous modifications and other embodiments may be devised by one of ordinary skill in the art. Accordingly, it will be understood that the appended claims are intended to cover all such modifications and embodiments, which come within the spirit and scope of the present disclosure.

What is claimed is:

1. A conveyor comprising:

a conveyor frame that comprises:

a first slot defined on a first portion of the conveyor frame; and

a notch defined on a second portion of the conveyor frame; and

a stanchion configured to be mounted on the conveyor frame, the stanchion comprising:

a first hook adapted to pass through the first slot of the conveyor frame; and

a surface that defines an aperture, the aperture adapted to enable a bolt to pass through the stanchion and insert into the notch in the second portion of the conveyor frame,

wherein the stanchion comprises:

a first portion that defines the first hook;

a second portion;

a third portion defined between the first portion and the second portion and protruding out from a plane defined by the first portion and the second portion,

wherein the third portion comprises the surface that defines the aperture.

2. The conveyor of claim **1**, wherein the stanchion is fixedly mountable on the conveyor frame based on at least an engagement of the first hook of the stanchion with the first slot of the conveyor frame and fastening of the bolt through the stanchion engaged on the conveyor frame.

3. The conveyor of claim **1**, wherein the second portion of the conveyor frame is a cross bar that extends across a side of the conveyor frame.

4. The conveyor of claim **2**, wherein the bolt is fastened through the stanchion engaged to the conveyor frame so that a distal end of the bolt abuts against a locking end defined by the notch.

5. The conveyor frame of claim **1**, wherein the conveyor frame further comprises a second slot, a third slot, and a fourth slot, and wherein

the first portion further defines a second hook, the first hook and the second hook adapted to engage with the first slot and the second slot, respectively, of the conveyor frame; and

the second portion defines a third hook and a fourth hook, the third hook and the fourth hook adapted to engage with the third slot and the fourth slot, respectively, of the conveyor frame.

6. The conveyor frame of claim **1**, wherein the stanchion further comprises:

an equipment mounting slot adapted to enable an engagement of a safety guard panel on the conveyor frame.

7. The conveyor frame of claim **1**, wherein the stanchion further comprises:

an equipment mounting slot adapted to enable an engagement of a divert unit of the conveyor on the conveyor frame.

8. A stanchion configured to be mounted on a conveyor frame of a conveyor, the stanchion comprising:

a longitudinal post defined between a first end and a second end, the longitudinal post comprising:

a first portion defining a first hook;

a second portion defining a second hook; and

a third portion defined between the first portion and the second portion so that the third portion protrudes out from a plane defined by the first portion and the second portion, wherein the third portion defines an aperture adapted to enable a bolt to pass through from the aperture and insert into a member of the conveyor frame, thereby, engaging the stanchion on the conveyor frame.

9. The stanchion of claim **8**, wherein a shape of the first hook and the second hook of the stanchion complements to a shape of a first slot and a second slot of the conveyor frame, thereby supporting an engagement of the first hook

into the first slot and an engagement of the second hook into the second slot of the conveyor frame.

10. The stanchion of claim **8** further comprising, an equipment mounting slot adapted to enable an engagement of a safety guard panel on the conveyor frame.

11. The stanchion of claim **8** further comprising, an equipment mounting slot adapted to enable an engagement of a divert unit of the conveyor on the conveyor frame.

12. The stanchion of claim **8** is fixedly mountable on the conveyor frame based on at least: an engagement of the first hook into a first slot of the conveyor frame, an engagement of the second hook into a second slot of the conveyor frame and fastening of the bolt through the stanchion engaged on the conveyor frame.

13. The stanchion of claim **8**, wherein, the bolt is fastened through the stanchion engaged to the conveyor frame so that a distal end of the bolt abuts against a locking end defined by the member of the conveyor frame.

14. A stanchion for mounting an equipment on a conveyor frame, comprising:

a first portion comprising a first hook adapted to pass through a first slot of the conveyor frame, thereby engaging the stanchion on the conveyor frame, wherein the first portion defines the first hook and a second hook, the first hook and the second hook adapted to engage with the first slot and a second slot of the conveyor frame, respectively;

a second portion defining a third hook and a fourth hook, the third hook and the fourth hook adapted to engage with a third slot and a fourth slot of the conveyor frame; and

a protruded portion that defines an aperture adapted to enable a bolt to pass through the aperture and abut with a member of the conveyor frame, thereby fixedly mounting the stanchion with the conveyor frame, wherein the protruded portion is defined between the first portion and the second portion of the stanchion and wherein the protruded portion protrudes out relative to a plane defined by the first portion and the second portion of the stanchion.

15. The stanchion of claim **14**, wherein at least one of the first portion and the second portion further defines, an equipment mounting slot adapted to enable an engagement of a safety guard panel on the conveyor frame.

16. The stanchion of claim **14** is fixedly mountable on the conveyor frame based on at least, an engagement of the first hook with the first slot of the conveyor frame and fastening of the bolt so that the bolt pass through the stanchion and abuts at a notch defined at the conveyor frame.

17. The stanchion of claim **14** further comprising, an equipment mounting slot adapted to enable an engagement of a divert unit of the conveyor on the conveyor frame.

18. A stanchion for mounting an equipment on a conveyor frame, comprising:

a first portion comprising a first hook adapted to pass through a slot of the conveyor frame, thereby engaging the stanchion on the conveyor frame;

a second portion; and

a protruded portion that defines an aperture adapted to enable a bolt to pass through the aperture and abut with a member of the conveyor frame, thereby fixedly mounting the stanchion with the conveyor frame, wherein the protruded portion is defined between the first portion and the second portion of the stanchion and wherein the protruded portion protrudes out relative to a plane defined by the first portion and the second portion of the stanchion.

* * * * *