V. D. KING.

SHINGLE BRACKET.

APPLICATION FILED JAN. 6, 1911.

1,028,362.

Patented June 4, 1912.

2 SHEETS—SHEET 1.

Fig. 1

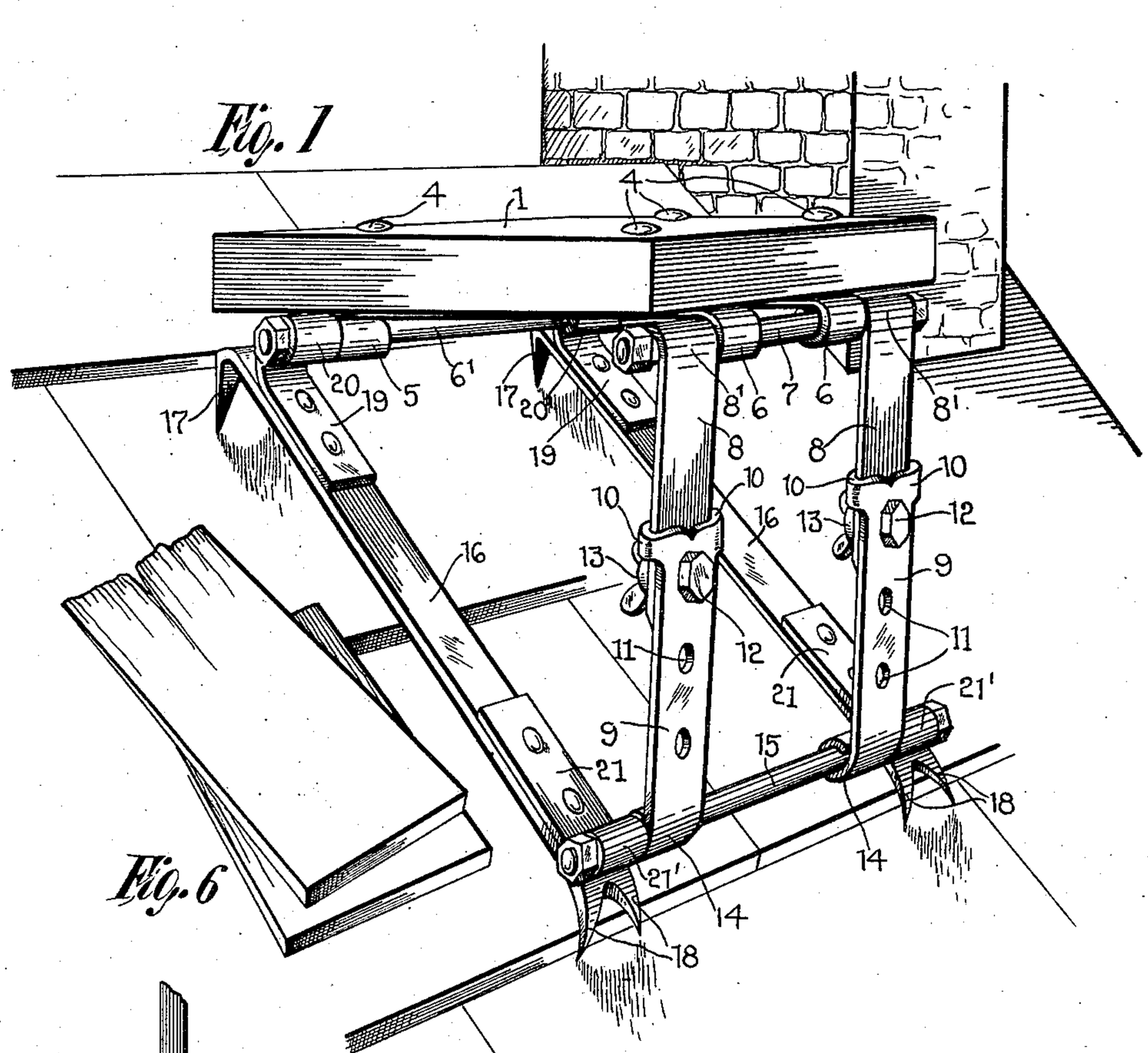

Fig. 6

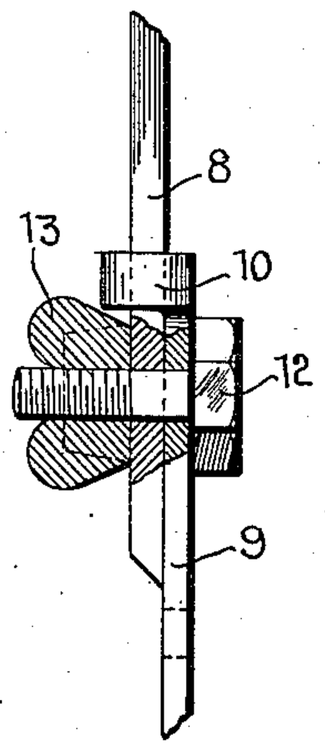

WITNESSES

Robert M. Sutphen.

R. J. Woodward.

INVENTOR

V. D. King

By E. C. Groosman, his Attorney.

COLUMBIA PLANOGRAPH CO., WASHINGTON, D. C.

V. D. KING.

SHINGLE BRACKET.

APPLICATION FILED JAN. 6, 1911.

1,028,362.

Patented June 4, 1912.

2 SHEETS—SHEET 2.

Fig. 2

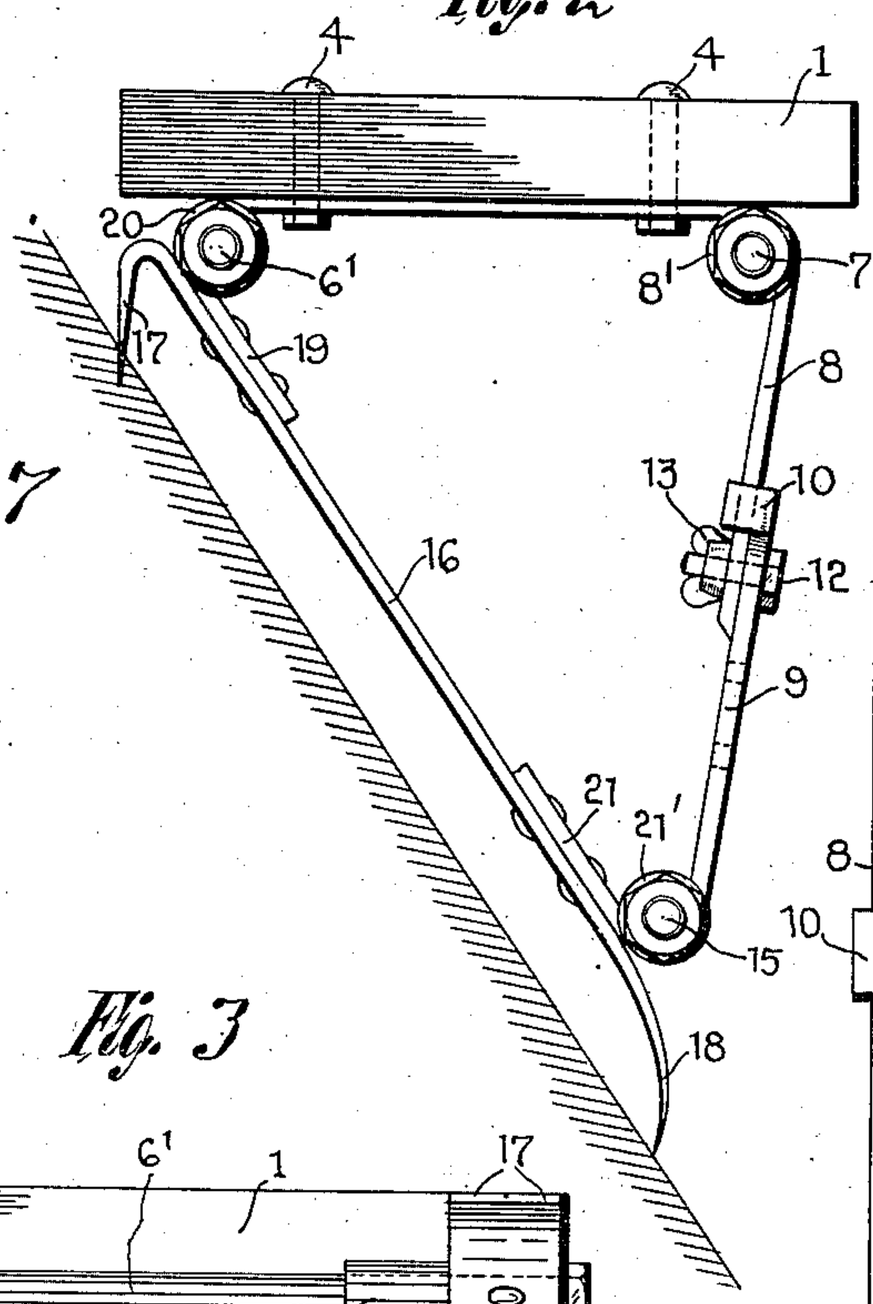

Fig. 7

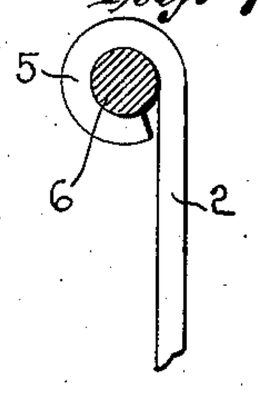

Fig. 5

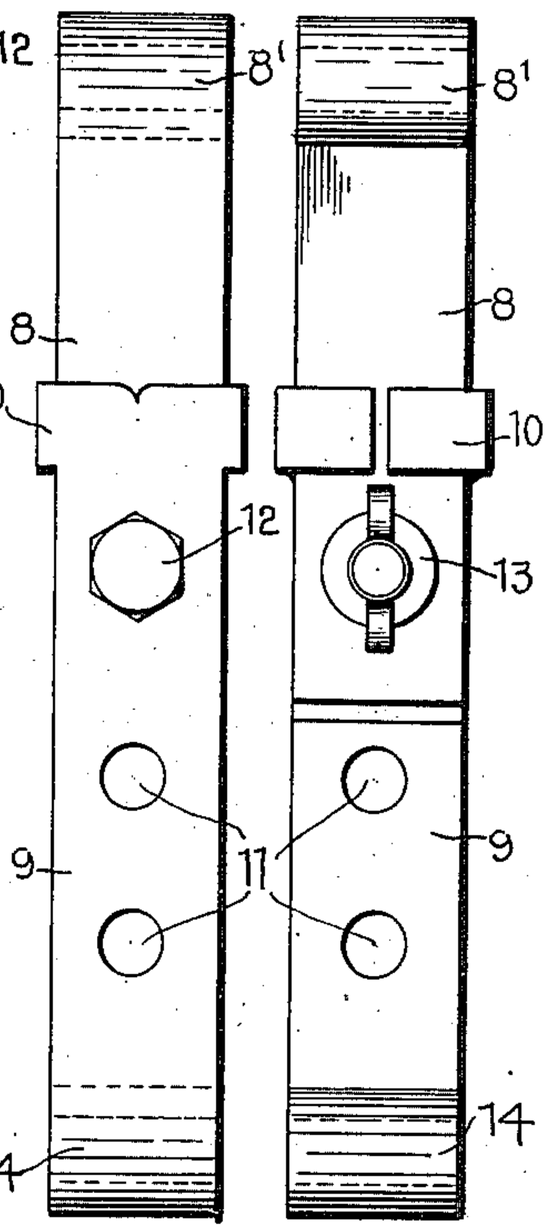

Fig. 4

Fig. 3

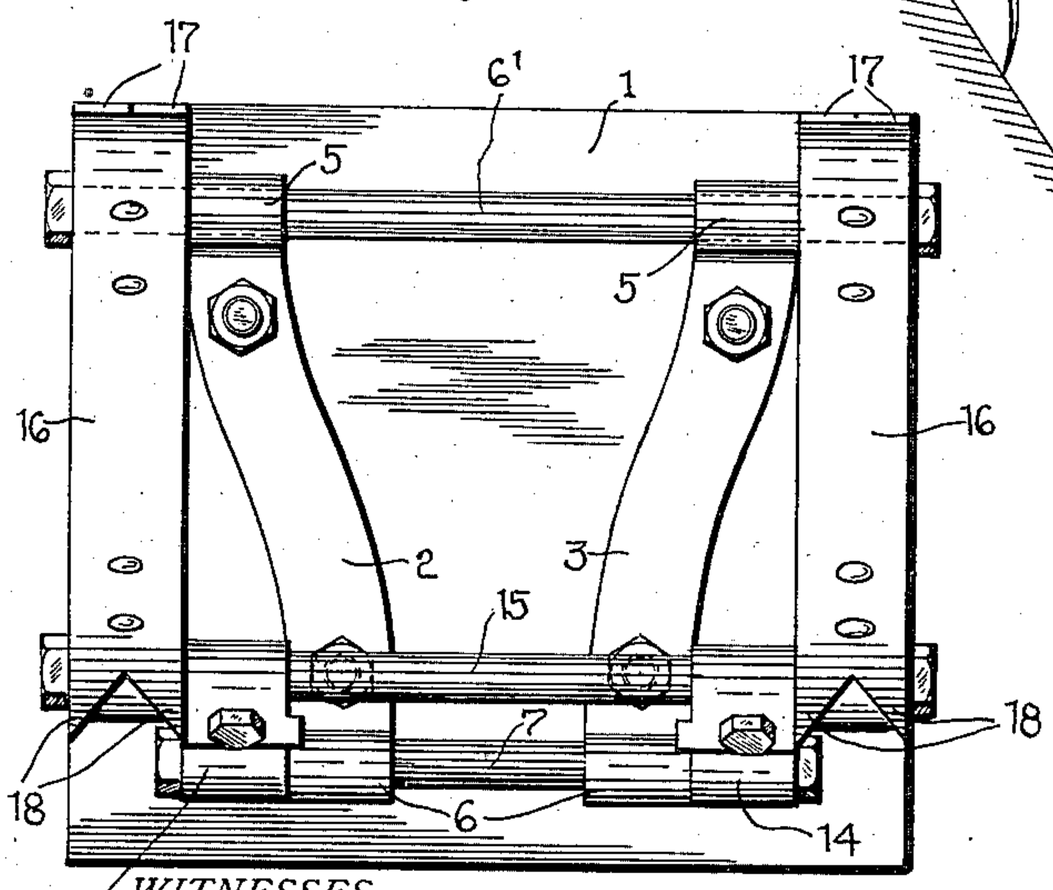

WITNESSES

Robert M. Sutphen

R. J. Woodward.

INVENTOR

V. D. KING

By E. G. Siggers Attorney.

COLUMBIA PLANOGRAPH CO., WASHINGTON, D. C.

UNITED STATES PATENT OFFICE.

VERSAL D. KING, OF GREENSBORO, VERMONT.

SHINGLE-BRACKET.

1,028,362. Specification of Letters Patent. Patented June 4, 1912.

Application filed January 5, 1911. Serial No. 600,955.

To all whom it may concern:

Be it known that I, VERSAL D. KING, a citizen of the United States, residing at Greensboro, in the county of Orleans and State of Vermont, have invented certain new and useful Improvements in Shingle-Brackets, of which the following is a specification, reference being had therein to the accompanying drawing.

This invention relates to scaffolds of the type which are principally used in shingling a roof and the principal object of the same is to provide a means whereby the scaffold may be adjusted so that the scaffold may be used on roofs slanting to different degrees and yet have the platform of the scaffold horizontal.

This invention is illustrated in the accompanying drawings, wherein:—

Figure 1 is a perspective view of the improved scaffold and shows the same positioned upon a roof. Fig. 2 is a side view of the scaffold. Fig. 3 is a bottom plan view of the scaffold. Fig. 4 is an enlarged view of one of the struts. Fig. 5 is a view of one of the struts looking from the opposite side from that shown in Fig. 4. Fig. 6 is an enlarged sectional view of a portion of one of the struts and shows the manner of connecting the two sections. Fig. 7 is an enlarged fragmentary view of the end of one of the struts.

Referring to the accompanying drawings by numerals it will be seen that the improved scaffold comprises a platform 1, which is preferably made from wood. A pair of supporting bars 2 and 3 are secured to the under surfaces of the platform 1 by means of the bolts 4 which pass through the platform and bars. The supporting bars are secured at one end near the center of the platform and are outwardly curved and have their ends positioned near the sides of the platform. The ends of the braces are rolled to provide housings 5 and 6, the housings at each end of the braces being in alinement. The rods 6′ and 7 are passed through the alined housings, and have their outer ends extending beyond the outer ends of the housings.

A strut is positioned upon each outer end portion of the rod 7 and holds the platform in a horizontal position. The strut comprises an upper section 8 and a lower section 9. The section 8 has its upper portion rolled to form a housing 8′ which surrounds the outer end portion of the rod 7, and by means of which the strut is pivotally connected with the rod. The struts are held upon the rods by means of nuts, or any other desired means. The lower section 9 is provided with a pair of arms 10 which surround the section 8 and form a means for slidably connecting the sections together. The section 8 is provided with an opening near its lower end and the section 9 is provided with a longitudinal series of openings 11. A bolt 12 passes through one of the openings 11 and through the opening formed in the end of the section 8 to hold the strut in an adjusted position, the bolt being held in place by a wing nut 13. The lower ends of the section 9 are rolled to form housings 14 through which there is passed the rod 15, which extends to either side of the housings. The fact that the ends of the braces having the housings 5 curve toward the sides of the platform brings the housings 5 and 14 in alinement and, as the rods 6′ and 15 are of approximately the same length, there is an equal amount of rod extending to the sides of the two sets of housings.

A pair of ties 16, each has its ends filed to provide a pair of upper claw teeth 17 and lower claw teeth 18. The upper teeth are bent back upon the body of the tie at approximately an angle of 45 degrees and the lower teeth are curved downwardly and approximately at an angle parallel with the angle of the upper teeth. A strip of metal 19 is secured to the upper portion of each of the ties and has its free end curved to form a housing 20, which surrounds the outer ends of the rod 6′ and which is held in place by means of nuts, or other desired securing means. A similar strip 21 is secured near the lower end of each of the ties and has its free end rolled to provide housings 21′ which are mounted upon the outer ends of the rods 15 where they are held by means of nuts or other desired securing means.

In the operation the angle of the roof is ascertained and the struts are moved to bring the ties at approximately the same angle to the platform. The platform is then placed upon the roof and the claw teeth 17 and 18 sink into the roof as clearly shown in Fig. 2. By means of having the upper teeth and the lower teeth positioned at an angle shown there is no danger of the platform slipping as the greater strain there is

placed upon the platform, the deeper the teeth will sink into the roof, and the tighter the platform will hold. It should be noted however, that the teeth do not sink deep enough into the roof to cause the same to leak.

What I claim is:—

A device of the character described, comprising an adjustable platform, curved supporting bars secured to the under side of said platform, the inner widely spaced ends of said supporting bars being secured upon a transverse rod at the inner side of said platform and the other more narrowly spaced ends being secured upon a transverse rod which is carried by the upper sections of adjustable struts which support the outer portion of the platform, and means to connect the lower ends of said adjustable struts with an inner transverse rod secured upon toothed ties which are also secured upon the first mentioned transverse rod.

In testimony whereof I hereunto affix my signature in presence of two witnesses.

VERSAL D. KING.

Witnesses:

W. W. REIRDEN,

P. L. WEBSTER.

Copies of this patent may be obtained for five cents each, by addressing the "Commissioner of Patents, Washington, D. C."