US010254828B2

(12) **United States Patent**
Fu et al.

(10) **Patent No.: US 10,254,828 B2**
(45) **Date of Patent: *Apr. 9, 2019**

(54) **DETECTION OF IMPROPER VIEWING POSTURE**

(71) Applicant: **International Business Machines Corporation**, Armonk, NY (US)

(72) Inventors: **Lin Fu**, Shanghai (CN); **Di Hu**, Shanghai (CN); **Shi Kun Li**, Shanghai (CN); **Ka Lin**, Shanghai (CN); **Wei Zuo**, Shanghai (CN)

(73) Assignee: **International Business Machines Corporation**, Armonk, NY (US)

(*) Notice: Subject to any disclaimer, the term of this patent is extended or adjusted under 35 U.S.C. 154(b) by 70 days.

This patent is subject to a terminal disclaimer.

(21) Appl. No.: **14/929,506**

(22) Filed: **Nov. 2, 2015**

(65) **Prior Publication Data**

US 2017/0068314 A1 Mar. 9, 2017

Related U.S. Application Data

(63) Continuation of application No. 14/849,152, filed on Sep. 9, 2015, now Pat. No. 9,990,033.

(51) **Int. Cl.**

G06F 3/01	(2006.01)
G06K 9/00	(2006.01)
G06F 3/03	(2006.01)

(52) **U.S. Cl.**

CPC ***G06F 3/013*** (2013.01); ***G06F 3/0304*** (2013.01); ***G06K 9/0061*** (2013.01); ***G06K 9/00281*** (2013.01)

(58) **Field of Classification Search**

CPC G06F 3/013; G06F 3/014; G06F 3/017

See application file for complete search history.

(56) **References Cited**

U.S. PATENT DOCUMENTS

8,464,160	B2	6/2013	Sakata et al.
2011/0102538	A1	5/2011	Tan

(Continued)

FOREIGN PATENT DOCUMENTS

CN	102841354	A	12/2012
CN	103512547	A	1/2014

(Continued)

OTHER PUBLICATIONS

Chen et al., "Depth Image Based System for Notifying Human Keeping Appropriate Distance from Screen-Implement", Computer Science and its Applications, Lecture Notes in Electrical Engineering, 2015, pp. 1215-1224, vol. 330, Springer Berlin Heidelberg.

(Continued)

Primary Examiner — Sepehr Azari
(74) *Attorney, Agent, or Firm* — Daniel R. Simek

(57) **ABSTRACT**

Embodiments of the present invention provide efficient and automatic systems and methods for regulating the viewing posture of a user. Embodiments of the present invention can be used to regulate the viewing posture of both juveniles and adults, by providing real-time data analysis of a viewing distance and viewing angle of a device, and generating feedback to a user related to their current viewing posture, while also providing increased supervision of the viewing posture of juvenile device users.

6 Claims, 7 Drawing Sheets

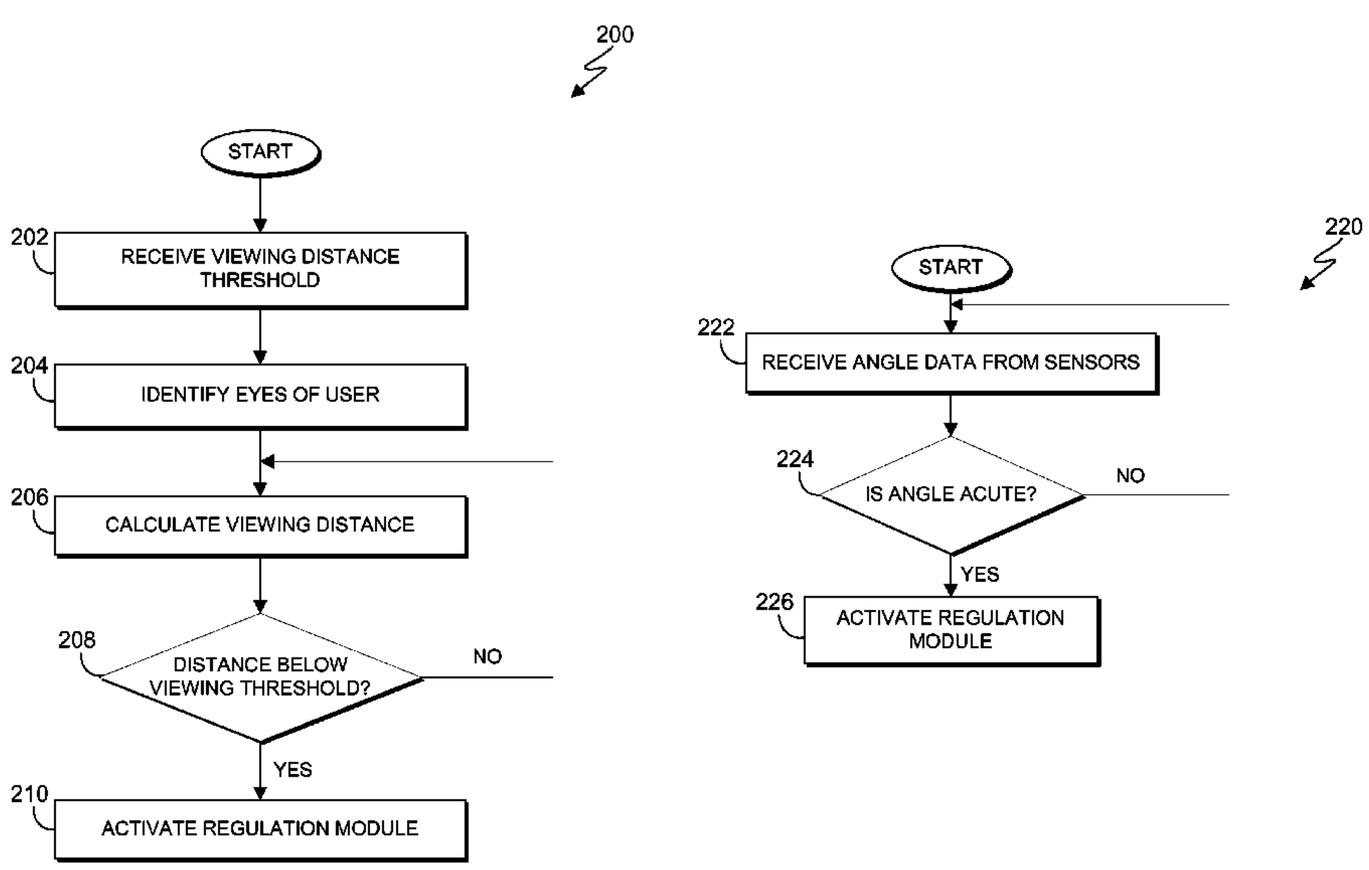

(56) **References Cited**

U.S. PATENT DOCUMENTS

2012/0133754	A1*	5/2012	Lee	G06F 3/013 348/78
2014/0285436	A1*	9/2014	Wu	G06F 3/013 345/156
2014/0355830	A1	12/2014	Park et al.	
2015/0193014	A1*	7/2015	Yamada	G06F 1/1615 345/156
2015/0379716	A1*	12/2015	Peng	G06T 7/73 382/106
2016/0026241	A1*	1/2016	Leung	G06F 3/012 345/156
2016/0050391	A1*	2/2016	Schultz	H04N 7/144 348/14.07

FOREIGN PATENT DOCUMENTS

CN	103646637	A	3/2014
CN	103839386	A	6/2014
CN	104076925	A	10/2014

OTHER PUBLICATIONS

Dong et al., "Eyesight Protection Mechanism for a Tablet", An IP.com Prior Art Database Technical Disclosure, IP.com No. 000223205, Nov. 8, 2012, pp. 1-3.

"Core Motion Framework Reference", iOS Developer Library, Updated Sep. 18, 2013, p. 1, <https://developer.apple.com/library/ios/documentation/CoreMotion/Reference/CoreMotion_Reference/index.htrnl>.

"Position Sensors", Android Developers, Printed Jul. 6, 2015, pp. 1-7, <http://developer.android.com/guide/topics/sensors/sensors_position.htrnl#sensors-pos-orient.

U.S. Appl. No. 14/849152, filed Sep. 9, 2015, Entitled "Detection of Improper Viewing Posture".

Appendix P: List of IBM Patents or Patent Applications Treated As Related, dated Nov. 2, 2015, 2 pages.

Office Action from corresponding CN Application No. 201610740908.5 dated Jan. 22, 2019.

Search Report from corresponding CN Application No. 201610740908.5 dated Dec. 29, 2018.

* cited by examiner

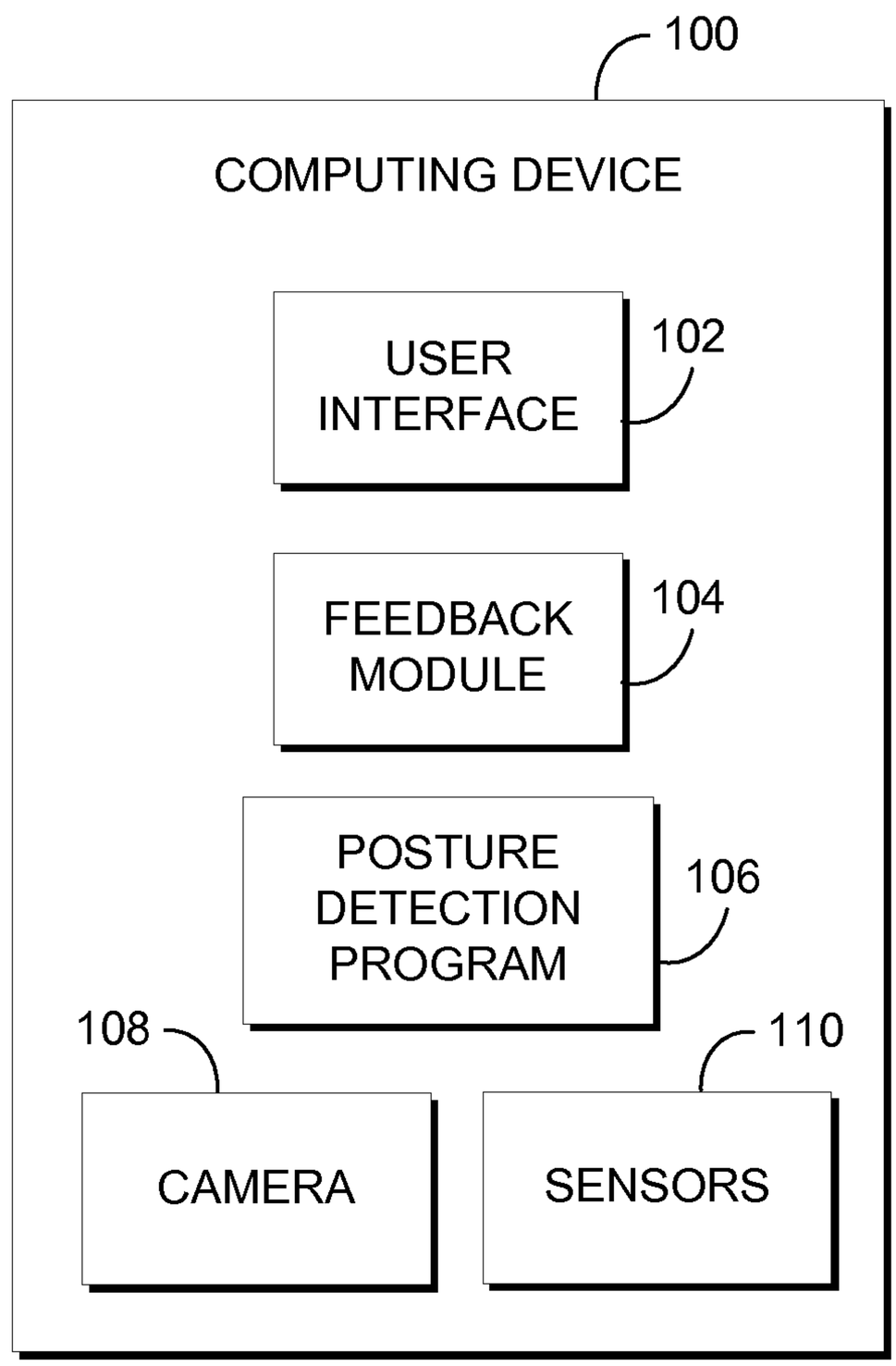
100
COMPUTING DEVICE
USER INTERFACE
102
FEEDBACK MODULE
104
POSTURE DETECTION PROGRAM
106
108
110
CAMERA
SENSORS

FIG. 1

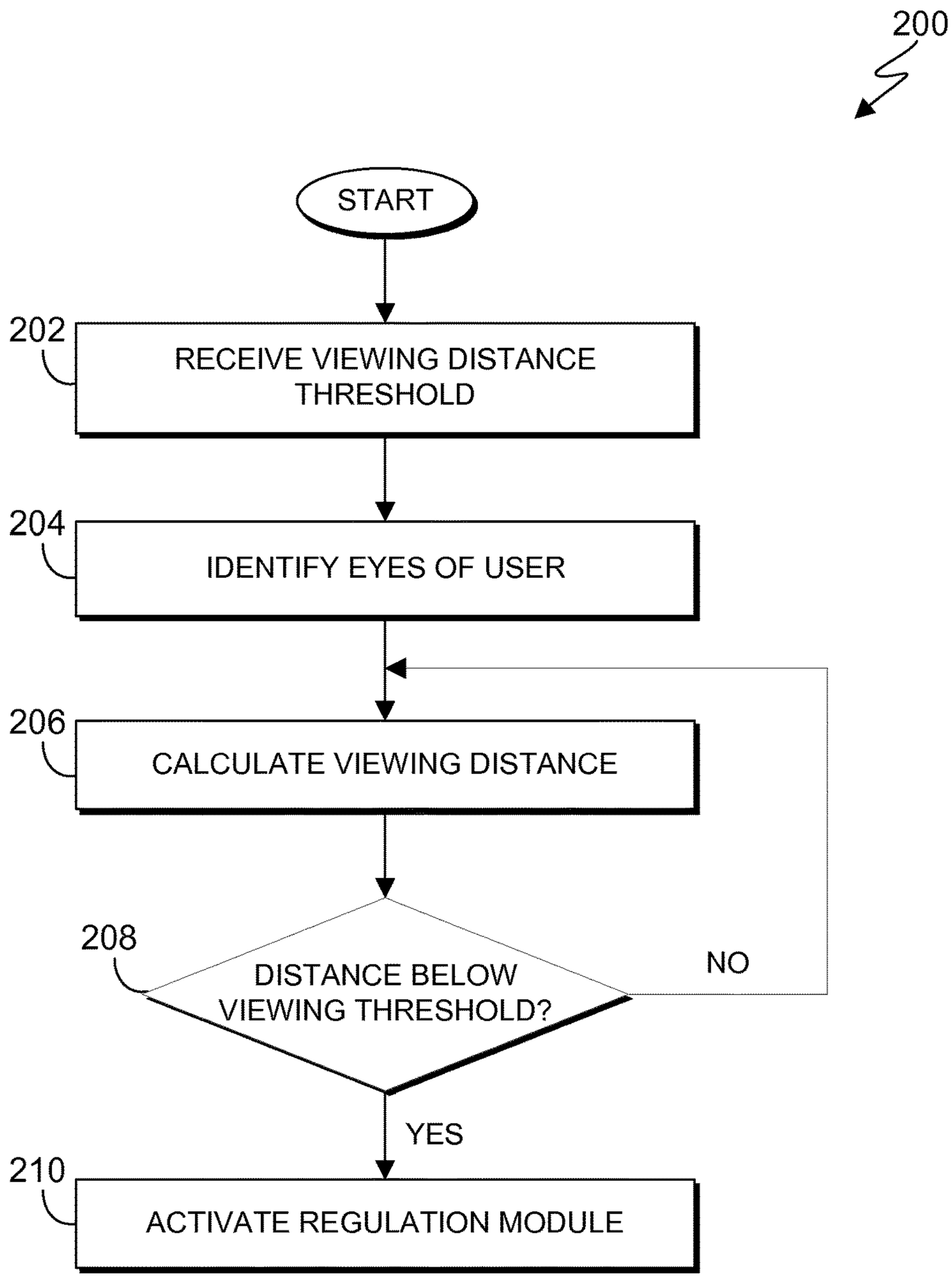
200
START
202
RECEIVE VIEWING DISTANCE THRESHOLD
204
IDENTIFY EYES OF USER
206
CALCULATE VIEWING DISTANCE
208
DISTANCE BELOW VIEWING THRESHOLD?
NO
YES
210
ACTIVATE REGULATION MODULE

FIG. 2A

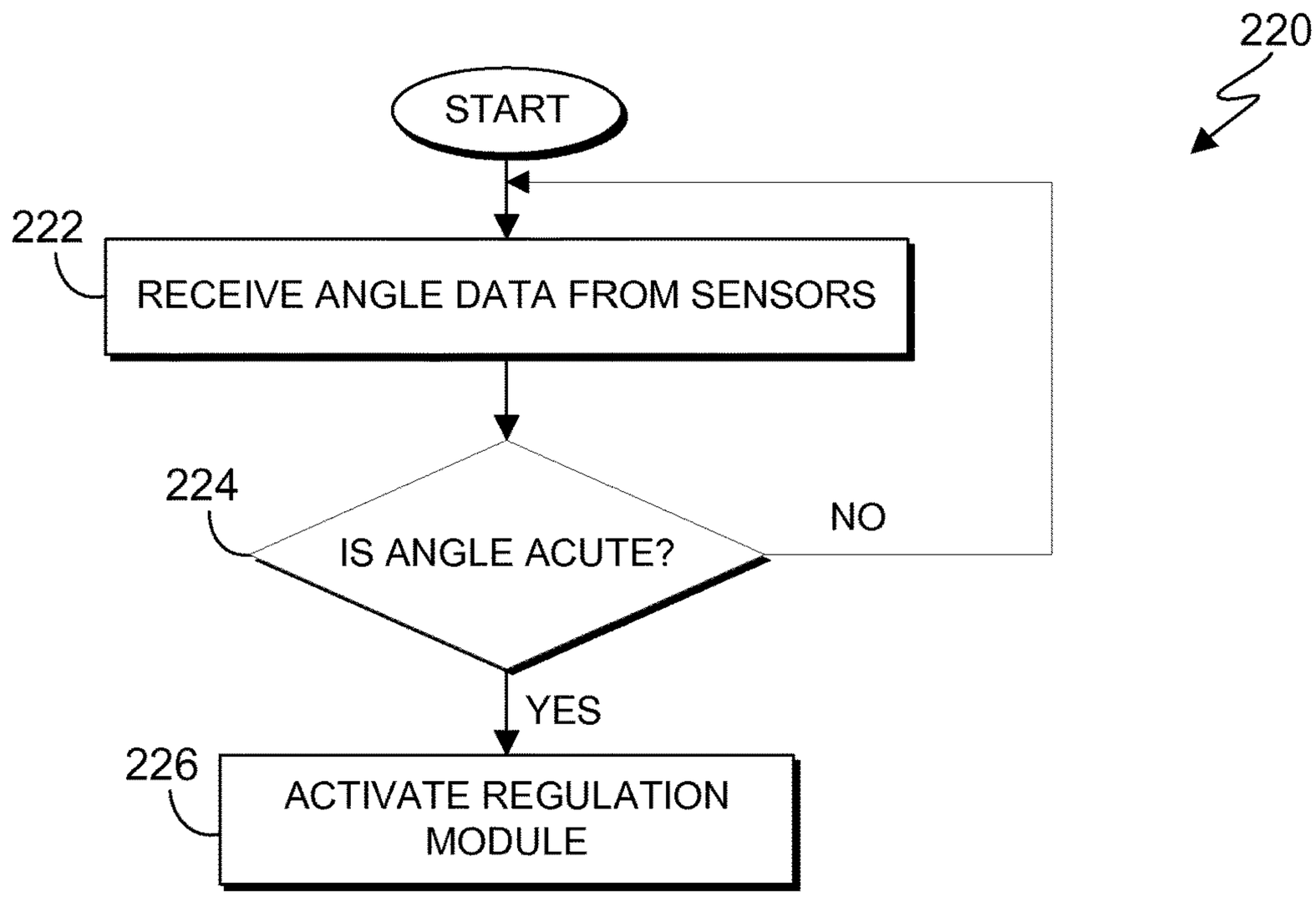
220
START
222
RECEIVE ANGLE DATA FROM SENSORS
224
IS ANGLE ACUTE?
NO
YES
226
ACTIVATE REGULATION MODULE

FIG. 2B

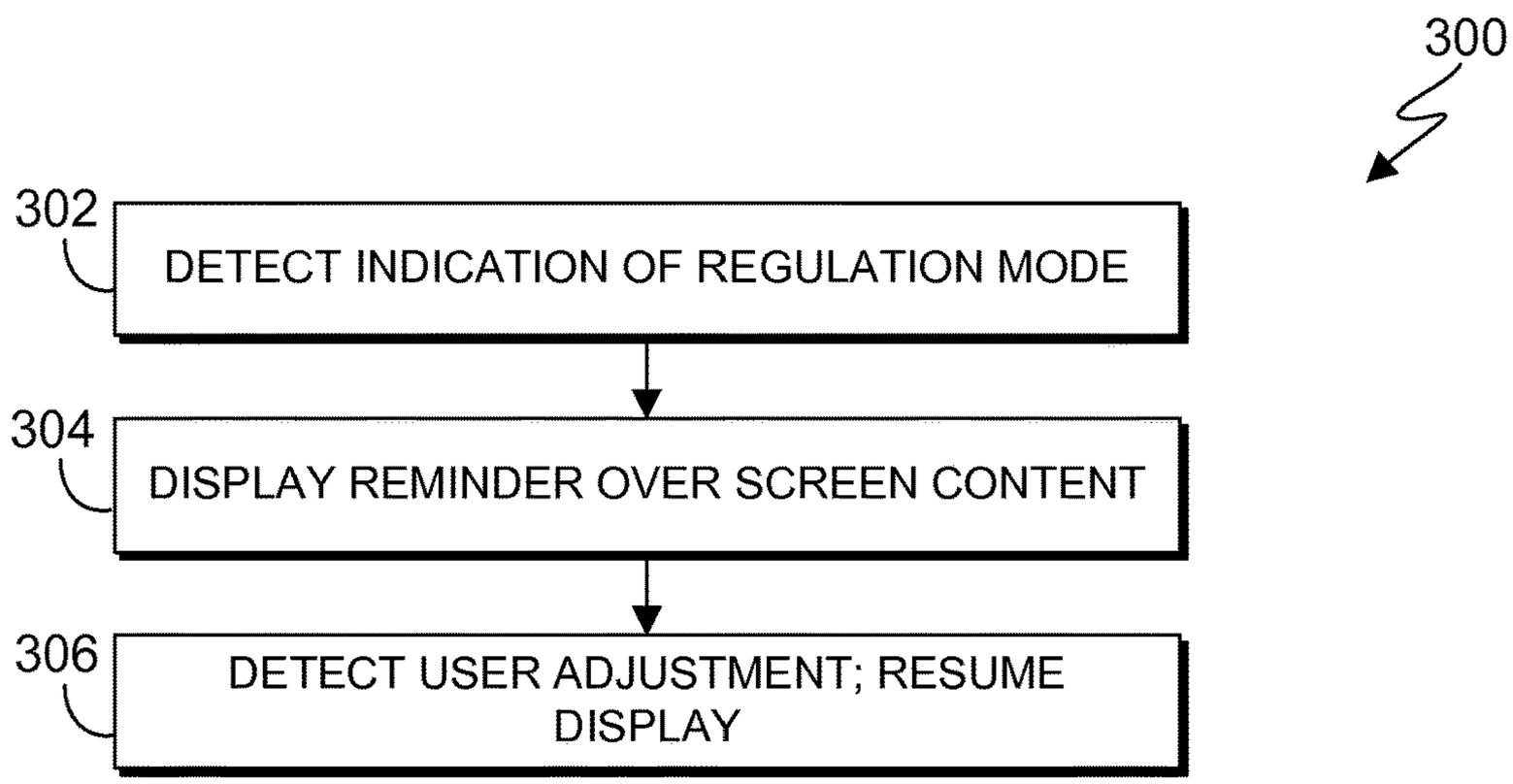
300
302
DETECT INDICATION OF REGULATION MODE
304
DISPLAY REMINDER OVER SCREEN CONTENT
306
DETECT USER ADJUSTMENT; RESUME DISPLAY

FIG. 3

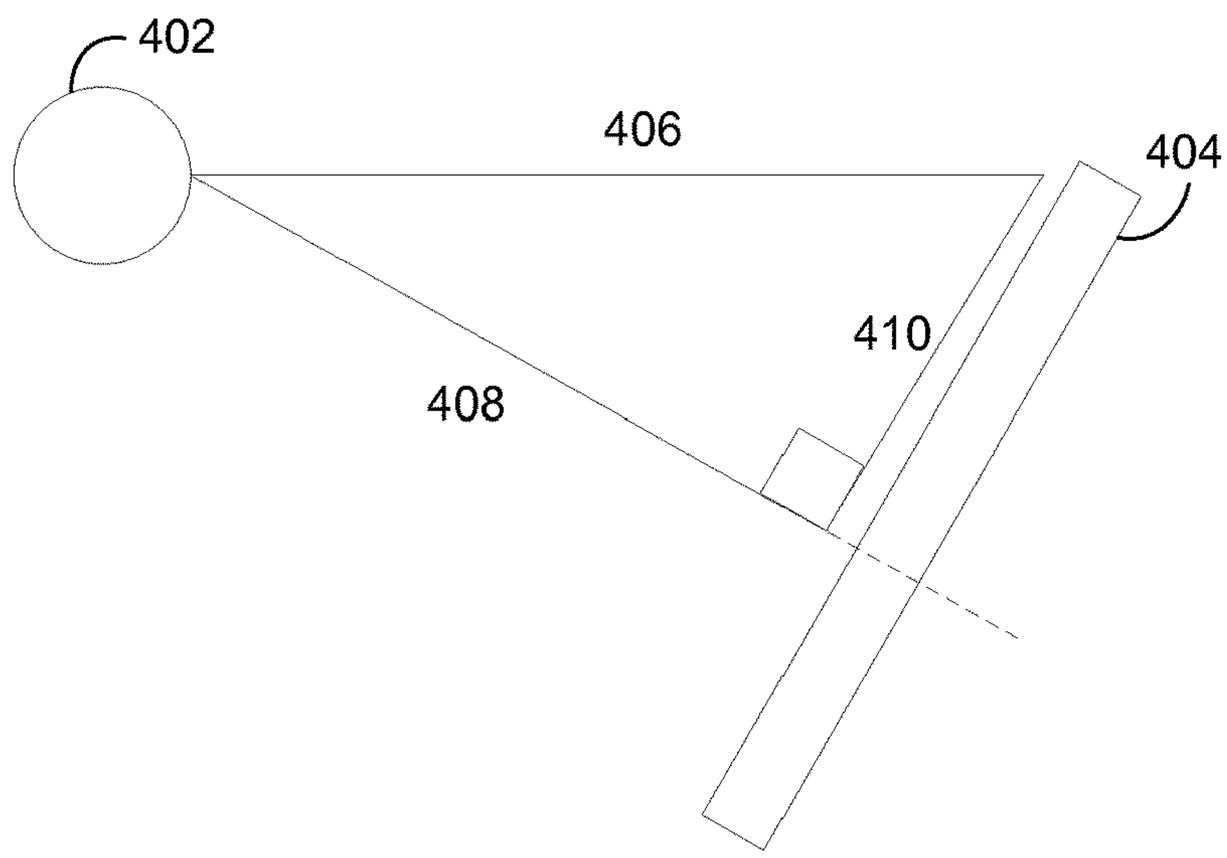

FIG. 4A

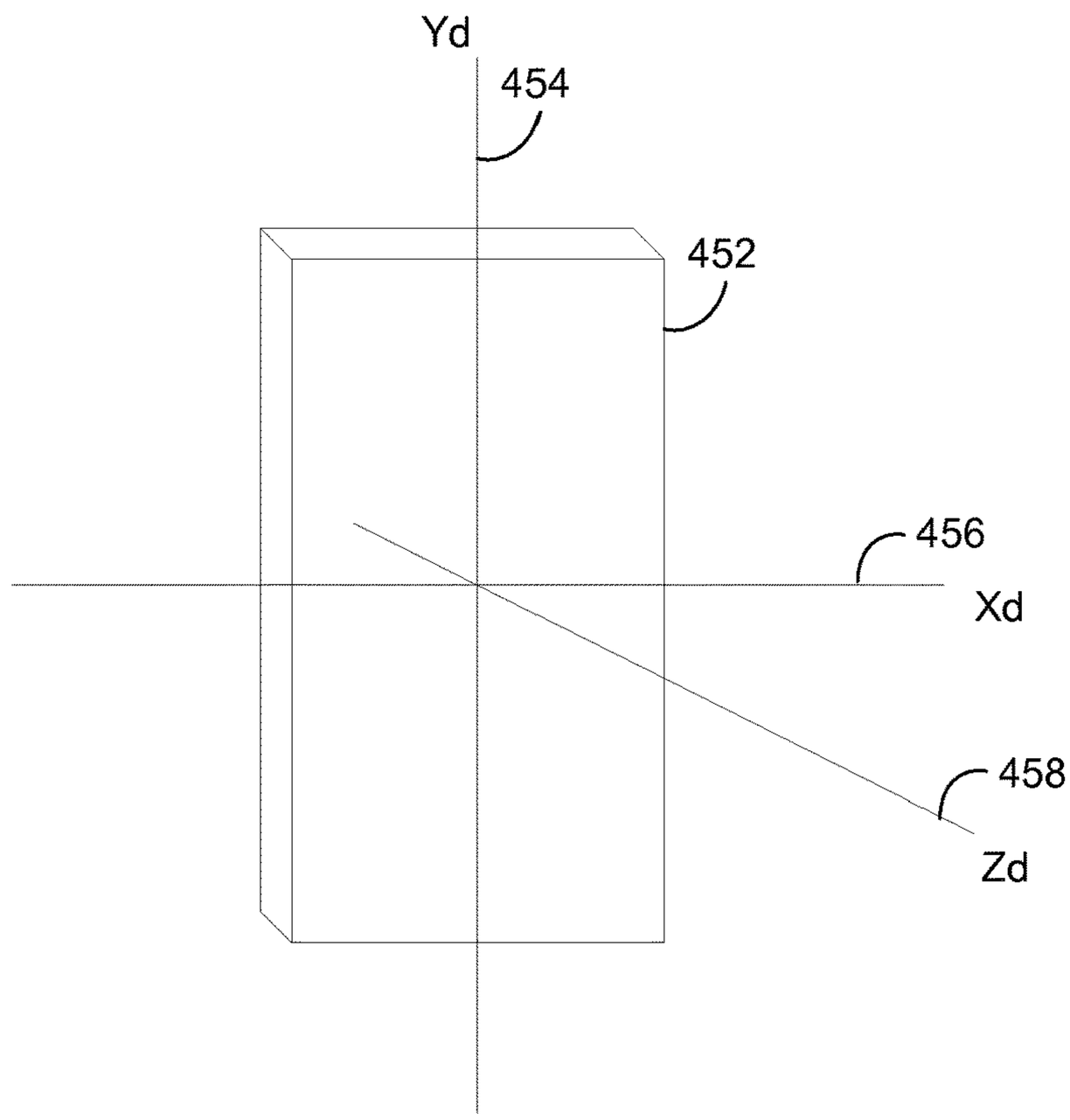

FIG. 4B

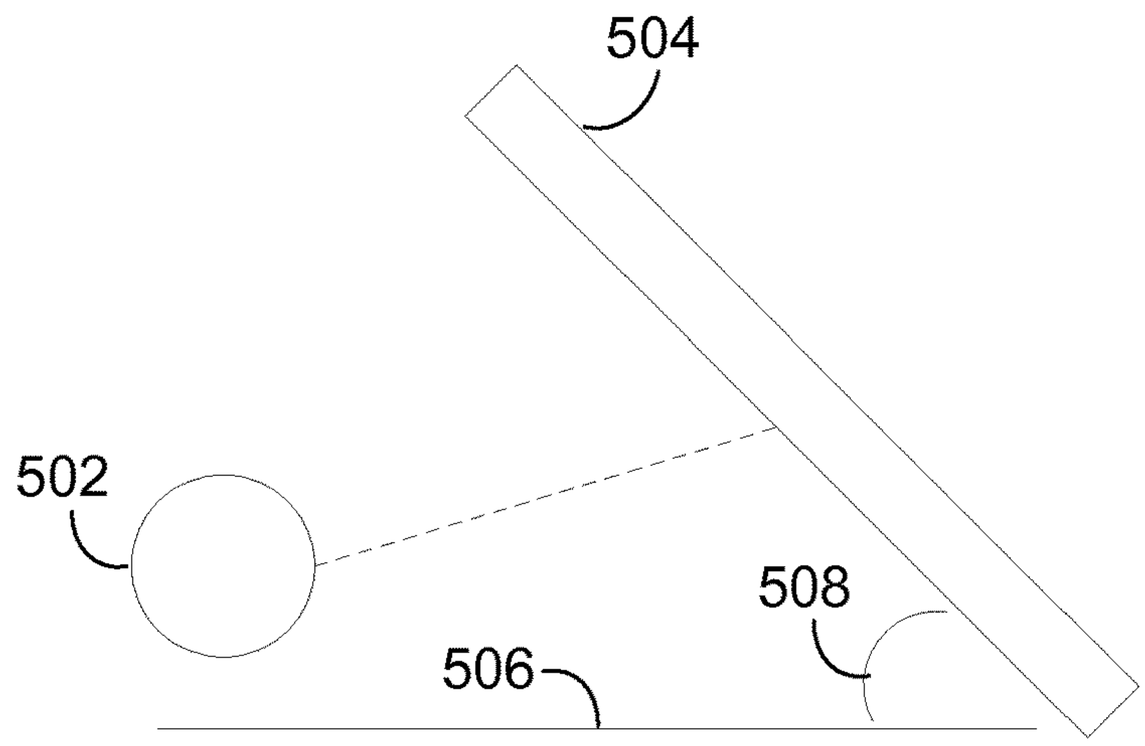

FIG. 5A

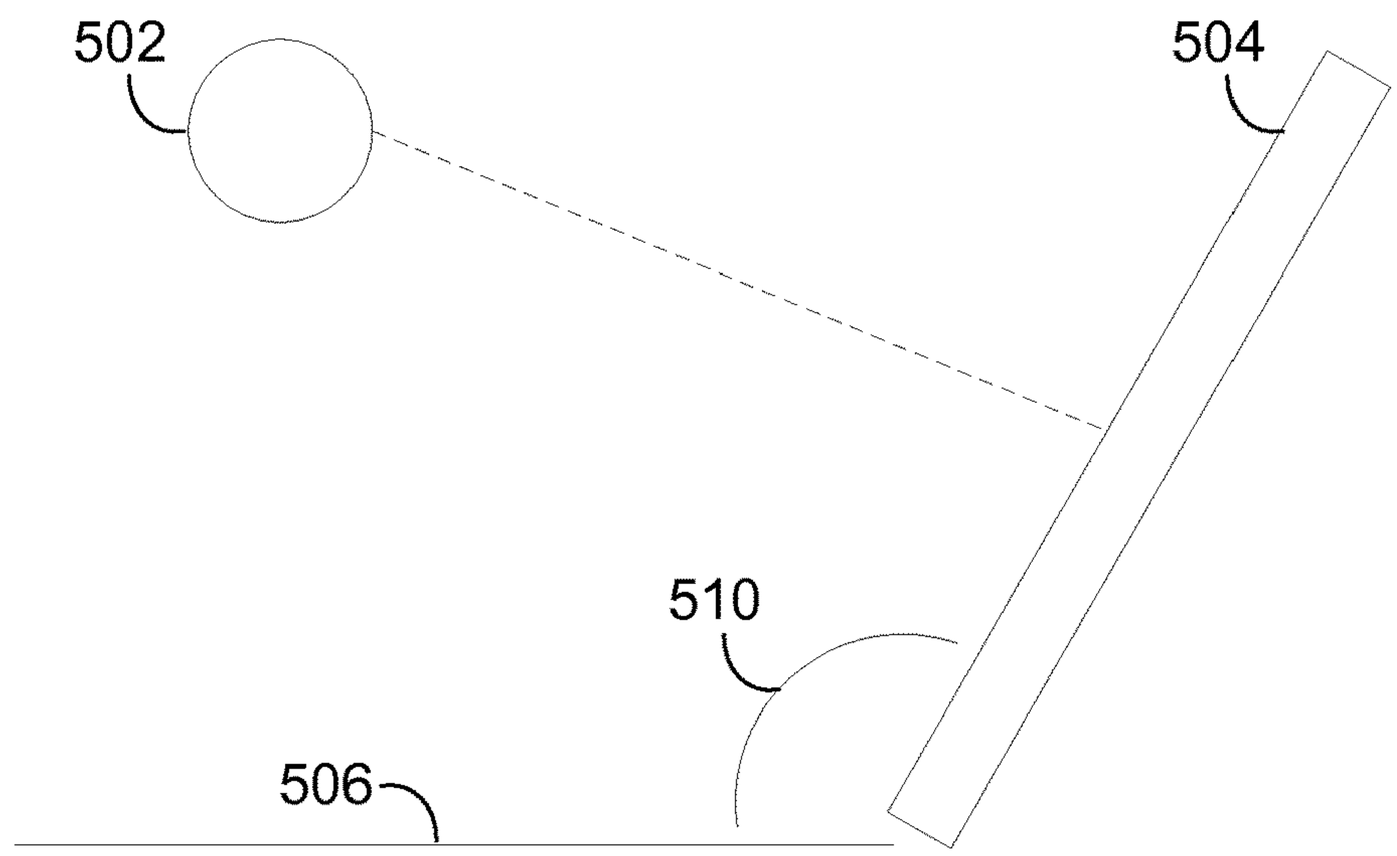

FIG. 5B

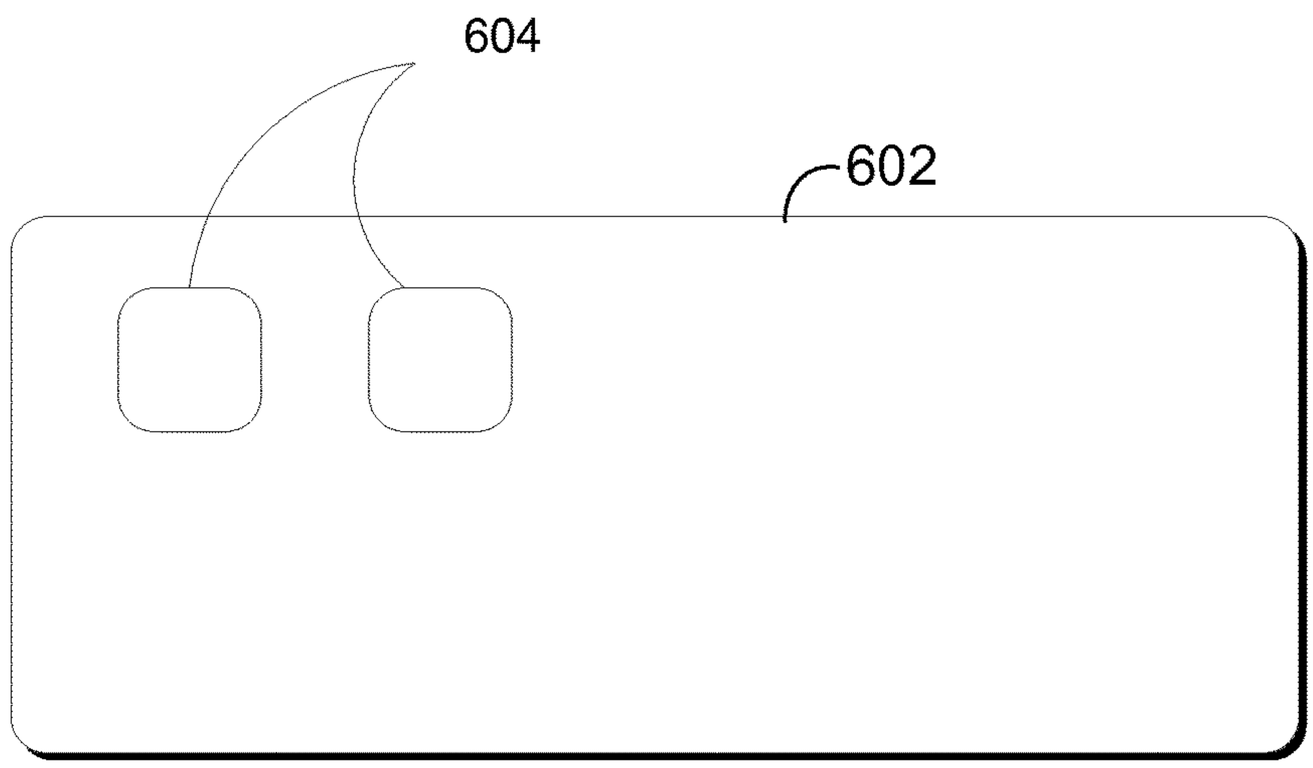

FIG. 6A

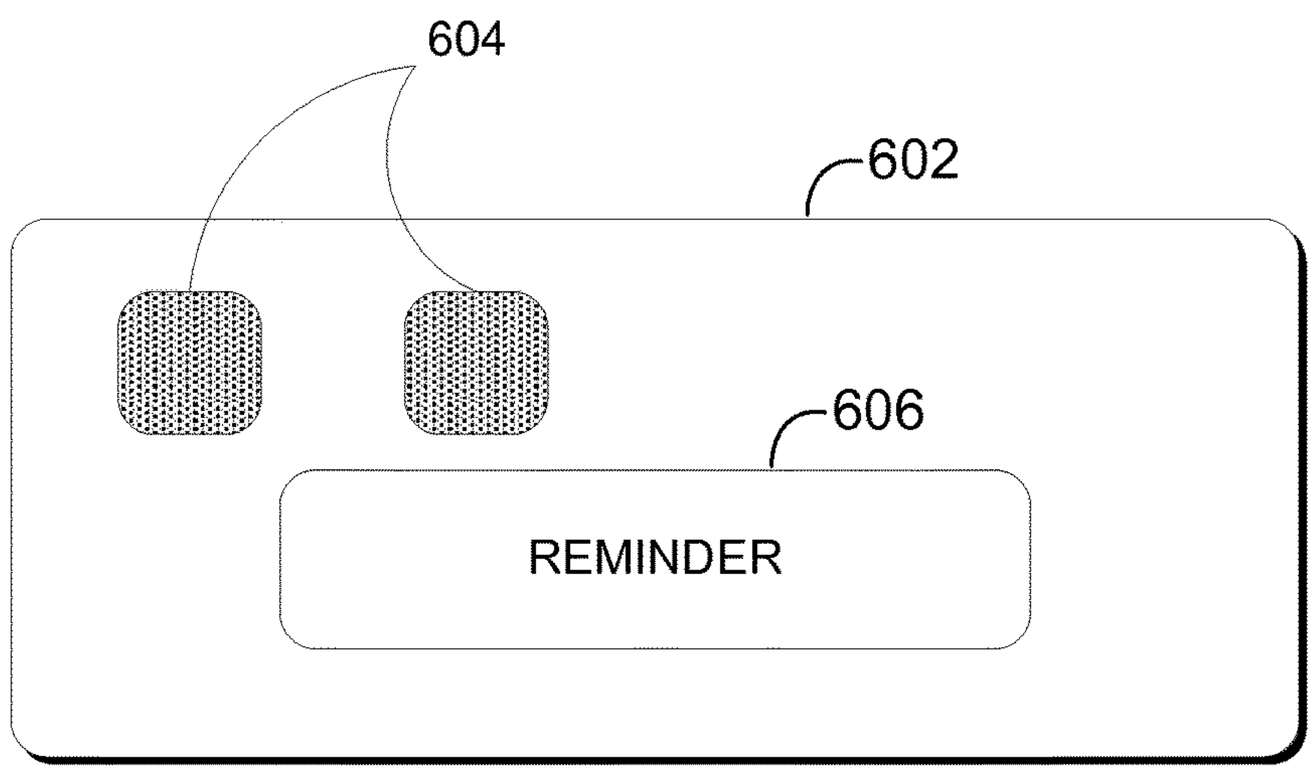

FIG. 6B

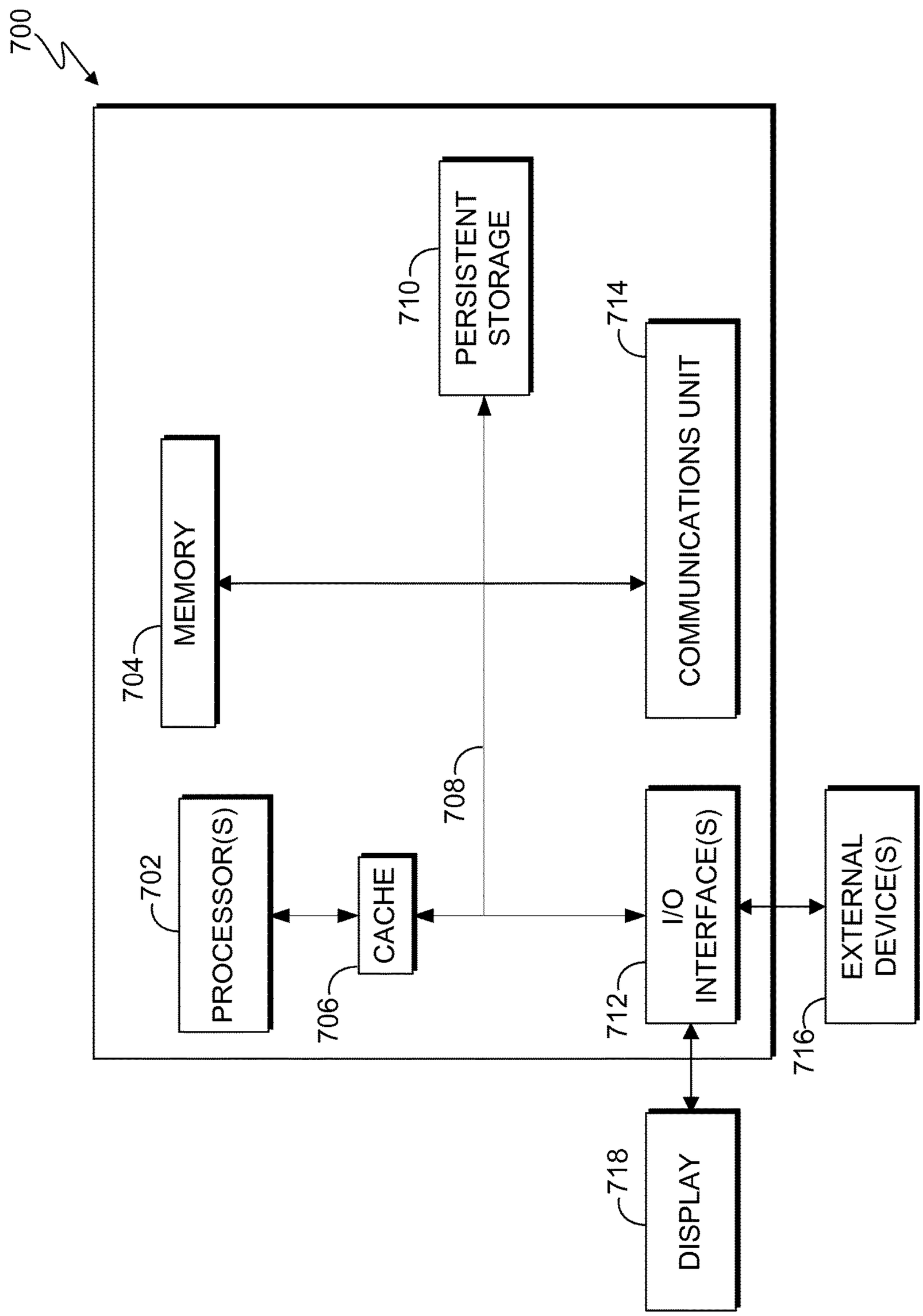
700
PERSISTENT STORAGE
710
COMMUNICATIONS UNIT
714
MEMORY
704
708
PROCESSOR(S)
702
CACHE
706
I/O INTERFACE(S)
712
EXTERNAL DEVICE(S)
716
DISPLAY
718

FIG. 7

DETECTION OF IMPROPER VIEWING POSTURE

BACKGROUND OF THE INVENTION

The present invention relates generally to the field of data processing and analysis, and more particularly to detecting improper posture while viewing a device screen and notifying the user of the improper posture, in order to continuously protect the eyesight of the user.

Mobile electronic devices are becoming more and more common. Mobile electronic devices may be, for example, smart phones, tablet computers, PSPs, and any device in which an electronic screen is eminent. As these mobile electronic devices are not fixed, users may place the devices in any viewing position they choose. Users of these mobile electronic devices may include adults, students, teenagers, and children. Time spent by users of all ages viewing content on mobile electronic devices is increasing.

While mobile electronic devices are beneficial and convenient for searching and/or viewing content, excessive time spent viewing the electronic screen may be harmful to the eyesight of a user, particularly children (i.e., under 18 years of age), as their eyesight may be less developed than an adult's eyesight, and they may not apply the proper viewing postures as consciously as an adult. Some postures, such as lying down (i.e., improper angle of viewing the device) or holding the device screen closely to the user's face, may be more harmful to a user's eyesight, leading to, for example, eye fatigue and/or shortsightedness.

Regulating a user's posture while viewing an electronic device is often not feasible all of the time, especially for an adult supervising the viewing posture of a child. There is a need for automatically regulating the viewing posture of a device user, which includes monitoring both the distance from the screen of a device, as well as, the viewing angle of a user viewing a device screen.

SUMMARY

According to an embodiment of the present invention, a method for regulating the viewing posture is provided. The method comprises identifying, by a front-facing camera, the eye of a device user, based on a set of eye attributes and calculating a distance between the eye of the device user and the screen of a device. The method further comprises determining whether the distance between the eye of the device user and the screen of the device is below a threshold, in which the threshold is a predetermined distance, based on the type of the device in use. The method further comprises sending an alert to the device user, responsive to determining that the distance between the eye of the device user and the screen of the device is below the threshold.

According to another embodiment of the present invention, a method for regulating the viewing posture is provided. The method comprises receiving, from an embedded sensor of the device, information detailing an angle of the device relative to a vantage point. The method further comprises determining whether the angle of the device relative to the vantage point is greater than zero degrees and less than 90 degrees and responsive to determining that the angle of the device relative to the vantage point is greater than or equal to zero degrees and less than 90 degrees, sending an indication to the device user.

Another embodiment of the present invention provides a computer program product for regulating viewing posture, based on the method described above.

Another embodiment of the present invention provides a computer system for regulating viewing posture, based on the method described above.

This may have the advantage that a user need not be constantly conscious of their viewing posture when viewing a device. As the device is constantly monitoring the distance of the device from the eye of the user, as well as the angle of the device against the horizon, a user may be notified in real-time when they are implementing a potentially harmful viewing posture. Embodiments of the present invention may additionally have the advantage that additional components are not needed to regulate the viewing posture of a user, as embodiments of the invention utilize embedded components of computing devices to monitor and calculate a user's viewing posture. Embodiments of the present invention may further have the advantage that the potentially less developed eyesight of a child using the device is better protected, and supervision efforts of a parent of the child may be lessened, as embodiments of the invention provide the feedback as to the posture of the device user, and an indication as to how to adjust an improper viewing posture.

BRIEF DESCRIPTION OF THE DRAWINGS

FIG. **1** depicts a block diagram illustrating a computing device, in accordance with an embodiment of the present invention;

FIG. **2**A depicts a flowchart illustrating operational steps for detecting that a user is viewing a display too closely, in accordance with an embodiment of the present invention;

FIG. **2**B depicts a flowchart illustrating operational steps for detecting that a user is viewing a display while lying down, in accordance with an embodiment of the present invention;

FIG. **3** depicts a flowchart illustrating operational steps for providing feedback to adjust the viewing posture of a user, in accordance with an embodiment of the present invention;

FIG. **4**A depicts an example of a user viewing a device for calculating the distance between a user's eye and the device camera, in accordance with an embodiment of the present invention;

FIG. **4**B depicts an example of the sensor coordinates used to determine a user's viewing angle, in accordance with an embodiment of the present invention;

FIGS. **5**A and **5**B depict examples of different user viewing angles, in accordance with an embodiment of the present invention;

FIGS. **6**A and **6**B depict an example of a reminder displayed to a user when viewing the device using an improper viewing posture, in accordance with an embodiment of the present invention; and

FIG. **7** depicts a block diagram of components of a computing device, in accordance with an illustrative embodiment of the present invention.

DETAILED DESCRIPTION

Embodiments of the present invention provide systems and methods to monitor data related to a user's viewing posture in real-time. Embodiments of the present invention provide systems and methods to detect a user's viewing posture, including the distance of viewing and the angle of viewing a mobile electronic device screen, and prompt users on how to adjust their viewing posture to a less harmful posture, when the user is in a potentially harmful viewing posture. As mobile electronic devices are not fixed, a user

may place the device in any viewing position, and it may be difficult for the user to be continuously conscious of whether they are viewing the device using a proper posture.

Embodiments of the invention may have the advantage that users do not need to monitor their own viewing posture, as the viewing posture of the user is constantly monitored, and the user is automatically notified when they have taken an improper viewing posture, thus aiding in avoiding viewing postures which may harm the eyesight of adults (e.g., eye fatigue or shortsightedness), as well as juveniles (i.e., users under 18 years of age, whose eyesight may still be developing). Embodiments of the invention leverage existing, embedded electronic device technologies, such as an embedded front-facing camera and embedded sensors, and additionally, leverage the computing capacity of the mobile electronic device on which the invention is operating. A more accurate calculation (i.e., error value is less than 5 mm) of the viewing distance is obtained using the embedded front-facing camera, which can emit infrared rays, and measures the distance between the device camera and the user's eye, rather than an interpupillary distance (i.e., the distance between the center of the pupils of the two eyes) which can vary in distance value between different users, leading to less accuracy.

Embodiments of the invention may additionally have the advantage of saving the supervision efforts of parents in regulating the posture of their children, while the children are using and viewing device screens, as the system can automatically detect an improper viewing posture of the child, and send a notification on how to adjust their viewing posture to a less harmful posture (e.g., by moving the device screen further from the eyes of the user, or adjusting the angle of the user viewing the device). Children may not apply the proper viewing postures as consciously as an adult, and thus embodiments of the invention aid in supervision efforts of adults in regulating the posture of their children while viewing device screens.

The present invention will now be described in detail with reference to the Figures. FIG. **1** depicts a block diagram illustrating a computing device, generally designated **100**, in accordance with an embodiment of the present invention. Modifications to computing device **100** may be made by those skilled in the art without departing from the scope of the invention as recited by the claims. In an exemplary embodiment, computing device **100** includes user interface (UI) **102**, feedback module **104**, posture detection program **106**, camera **108**, and sensors **110**.

In various embodiments of the present invention, computing device **100** can be a laptop computer, a tablet computer, a netbook computer, a personal computer (PC), a desktop computer, a personal digital assistant (PDA), a smart phone, a thin client, a wearable device, or any programmable mobile electronic device capable of executing computer readable program instructions. Computing device **100** may include internal and external hardware components, as depicted and described in further detail with respect to FIG. **7**.

UI **102** may be, for example, a graphical user interface (GUI) or a web user interface (WUI) and can display text, documents, web browser windows, user options, notifications, application interfaces, and instructions for operation, and includes the information (such as graphic, text, and sound) a program presents to a user and the control sequences the user employs to control the program. UI **102** is capable of receiving data, user commands, and data input modifications from a user. UI **102** is also capable of communicating with posture detection program **106**, feedback module **104**, camera **108**, and sensors **110**, and displaying notifications based on data obtained from posture detection program **106**, feedback module **104**, camera **108**, and/or sensors **110**. In some embodiments, UI **102** can be integrated with feedback module **104** and/or posture detection program **106**.

Feedback module **104** is a component which generates feedback to a user, in response to data gathered by posture detection program **106**, detecting an improper viewing posture of a user. In this exemplary embodiment, feedback module **104** sends feedback to UI **102** in the form of a written message. In other embodiments, feedback module **104** may generate any type of feedback in response to the detection of an improper viewing posture of a user, including haptic feedback, visual feedback, and audio feedback. In some embodiments, feedback module **104** is integrated with UI **102**.

In this exemplary embodiment, posture detection program **106** can communicate with camera **108** and sensors **110** to receive data about the angle, distance, and/or movement of computing device **100**. Posture detection program **106** can determine, based on the gathered data, whether a user is in a correct viewing posture (i.e., predetermined safe distance and viewing angle), and if a user is not in a correct viewing posture, posture detection program **106** can send a notification to the user, via feedback module **104**.

Camera **108** can be any computing device camera technology known in the art. In this exemplary embodiment, camera **108** is embedded within computing device **100** and can emit infrared rays. In other embodiments, camera **108** can be a separate component from computing device **100**, and can communicate with computing device **100** through a wired or wireless connection. Camera **108** can identify the eyes of a user, based on predetermined eye characteristics, and can communicate a distance between the eyes of the user and the camera to posture detection program **106**.

In this exemplary embodiment, sensor(s) **110** can be any sensor, or combination of sensors, including, for example, gravity sensors, orientation sensors, accelerometers, and geomagnetic field sensors. Sensor(s) **110** can gather data, such as computing device **100** orientation and/or position information, and send the gathered information to posture detection program **106**.

FIG. **2**A depicts flowchart **200** illustrating operational steps of posture detection program **106** for detecting that a user is viewing a device screen too closely, in accordance with an embodiment of the present invention.

In step **202**, posture detection program **106** receives a viewing distance threshold. In this exemplary embodiment, a manufacturer of computing device **100** sends a viewing distance threshold for a specific computing device, which is determined from scientific study results. In other embodiments, a threshold distance may be included with computing device **100**. In some embodiments, the viewing distance threshold may be different depending on the computing device (i.e., one threshold distance for a particular smartphone, and a different threshold distance for a particular tablet device).

In step **204**, a camera, such as camera **108**, of computing device **100** identifies the eyes of a user. In this exemplary embodiment, when computing device **100** is turned on, an embedded, front-facing, camera **108** identifies the eyes of a user, based on a set of predetermined eye attributes. For example, attributes to define the eyes of a user may be: for a single eye, the outline is olivary, and there is a circle in the middle, which takes up about 30% to 50% of the area; eyes are always in axisymmetric pairs because the face of a user

is usually parallel to the screen while they are viewing a device; and the centric part of each eye is colorful, such as black, brown, green, blue, or amber, and the rest of the eye is white. In other embodiments, a user's eyes may be defined using any set of attributes, including a specific eye color or eye size (i.e., the eyes of a child may be a smaller size than the eyes of an adult).

In step **206**, posture detection program **106** calculates the viewing distance between the identified eyes of a user and the device screen. In this exemplary embodiment, camera **108** can emit an infrared ray, which is used in measuring the distance between the eyes of a user and the device screen (i.e., the viewing distance). By calculating the endpoint of the viewing distance as the user's eye, the error value is less than 5 mm. In order to calculate the viewing distance, the distance from camera **108** and the central horizontal line is obtained (a constant value that the manufacturer of the device can set) and the distance between the user's eye and camera **108** is obtained. The distance between the user's eye and the screen (i.e., the viewing distance) can then be calculated using the above two obtained values (described in further detail with respect to FIG. **4**A).

In step **208**, posture detection program **106** determines whether the viewing distance is below the received viewing threshold. Posture detection program **106** continuously receives and monitors the viewing distance of the user. In this exemplary embodiment, the viewing distance is below a received viewing threshold when posture detection program **106** determines that the measured distance between the eyes of the user and the device screen is less than the viewing distance threshold, received from the manufacturer (i.e., a user is too close to the device screen).

If, in step **208**, posture detection program **106** determines that the viewing distance is below the received viewing threshold, indicating that the user is too close to the device screen, then, in step **210**, posture detection program **106** activates feedback module **104** (described in FIG. **3**).

If, in step **208**, posture detection program **106** determines that the viewing distance is not below the received viewing threshold, then posture detection program **106** continues to calculate and monitor the distance of the device from the eyes of the user (i.e., step **206**).

FIG. **2**B depicts flowchart **220** illustrating operational steps of posture detection program **106** for detecting that a user is viewing a display while lying down, in accordance with an embodiment of the present invention.

In step **222**, posture detection program **106** receives angle data from sensors **110**. In this exemplary embodiment, when the screen is on, an embedded sensor(s) **110** continuously measures the angle of computing device **100** against the horizon. In some embodiments, APP developers can use the application program interfaces (APIs) provided by the operating system (OS) providers to detect the motions of the device, enabling the APPs to be motion controlled. For example, APP developers can design motion controlled APPs for various brands and products.

In step **224**, posture detection program **106** determines whether the angle of computing device **100** against the horizon is acute. The angle against the horizon is acute if the angle is less than 90 degrees (i.e., less than a right angle). In this exemplary embodiment, an angle that is less than 90 degrees is an indication that the user is lying down while viewing computing device **100**. In other embodiments, any angle which may be predetermined to be an unsafe viewing angle may be used as the threshold angle against the horizon of computing device **100**.

If, in step **224**, posture detection program **106** determines that the angle of computing device **100** against the horizon is acute, then, in step **226**, posture detection program **106** activates feedback module **104** (described in FIG. **3**).

If, in step **224**, posture detection program determines that the angle of computing device **100** against the horizon is not acute (i.e., the angle is greater than 90 degrees), then posture detection program **106** continues to monitor the angle degree by analyzing received angle data from sensors **110**. In this exemplary embodiment, an angle that is not acute is an indication that the user is viewing computing device **100** at a safe viewing angle.

FIG. **3** depicts a flowchart **300** illustrating operational steps for providing feedback to adjust the viewing posture of a user, in accordance with an embodiment of the present invention.

In step **302**, posture detection program **106** detects an indication that feedback module **104** is activated (i.e., from step **210** of FIG. **2**A or step **226** of FIG. **2**B).

In step **304**, feedback module **104** displays a reminder over the screen content. In this exemplary embodiment, the operating system (OS) of computing device **100** pauses the applications and content running on the device, and the content on the device screen becomes fuzzy when a reminder is displayed on the device screen. A reminder indicating the improper posture, and how to fix the improper posture may appear on the screen, such as "You are too close to the screen; please move the screen further from you" or "It detects you are watching lying down; please sit up to protect your eyes." In other embodiments, there is a 'time-out' period in which the operating system may pause the device content for a predetermined period of time, until the user changes their viewing position.

In step **306**, posture detection program **106** detects a user adjustment to the computing device **100**. In this exemplary embodiment, a user may adjust their posture after receiving the reminder displayed on the screen. For example, a user may sit up rather than lying down if posture detection program **106** indicates an acute angle, or increase the viewing distance if posture detection program **106** indicates the user is too close to the device. After a user adjustment has been detected, the OS of computing device **100** resumes the prior operations (e.g., if a video was playing prior to the reminder display, the video resumes playing). In other embodiments, the OS resumes the prior operations responsive to a user gesture. For example, the OS may resume operations responsive to a user gesture dismissing the reminder, such as a tap on the screen of a touch device.

FIG. **4**A depicts an example of a user viewing a device for calculating the distance between a user's eye and the embedded device camera, in accordance with an embodiment of the present invention.

To calculate the viewing distance **408**, the length **410** is needed (i.e., the distance from the embedded front-facing camera **108** and the central horizontal line, which is the center of the device). The length **410** is a constant value, which may be obtained or set by the manufacturer of the particular computing device. The distance **406** between the eye of the user **402** and the camera **108** of computing device **404** is also needed. This value may be obtained by the embedded front-facing camera **108**, which focuses on the identified eye of the user. In this exemplary embodiment, the embedded front-facing camera **108** can emit infrared rays, which are used to measure the viewing distance **408** of a user. Infrared rays are used to measure the distance from the focused object (e.g., the eye of the user) to the camera in an

'auto-focus' mode. This is derived from the optical principle of the Gaussian formula recited in Equation 1:

$$\frac{1}{f} = \frac{1}{u} + \frac{1}{v} \quad \text{(Equation 1)}$$

In this Equation 1, f is the focus length, u is the distance from the lens to the object, and v is the distance from the lens to the image. After obtaining the values for f and u, by applying Equation 1, camera **108** can determine what the distance from the lens to the image (v) should be, and can make the adjustment accordingly in order to generate a high-quality image.

The viewing distance **408** between the eye of the user **402** and the computing device **404** screen may be obtained using the Pythagorean theorem recited in Equation 2:

$$Ds=\sqrt{Dc^2-L^2} \quad \text{(Equation 2)}$$

In this Equation 2, Ds represents the viewing distance **408**, Dc represents the distance **406** between the eye of the user **402** and the camera **108**, and L represents the length **410**. This principle can be applied to obtain a viewing distance **408** (i.e., the distance between the camera and the eye of a user **402**), by using components already integrated with computing device **404** (e.g., an embedded front-facing camera) and known optical principles, (i.e., Equations 1 and 2, as described above).

FIG. **4**B depicts an example of the sensor coordinates used to determine a user's viewing angle, in accordance with an embodiment of the present invention.

In order to determine a user's viewing position (i.e., if the user is lying down), APIs provided by the embedded sensors are used. In the depicted example, device **452** contains an orientation sensor (not shown) which is software-based, and derives its data from an accelerometer and a geomagnetic field sensor. The orientation sensor can be used to monitor the position of a device relative to the Earth's frame of reference (i.e., magnetic north). Further, certain commands (e.g., getOrientation( ) on an Android platform) can compute the orientation of device **452**, based on the rotation matrix. When it returns, the array values may be filled with, for example, the following results: values[0]: azimuth, degrees of rotation around the z axis; values[1]: pitch, degrees of rotation around the x axis; and values[2]: roll, degrees of rotation around the y axis, where the reference coordinate system is as follows: Xd (i.e., x-axis **456**) is defined as the vector product y.z (it is tangential to the ground at the device's current location and roughly points West); Yd (i.e., y-axis **454**) is tangential to the ground at the device's current location and points towards the magnetic North Pole; and Zd (i.e., z-axis **458**) points towards the center of the Earth and is perpendicular to the ground.

In this example, the rotations around the x-axis **456** or the y-axis **454** are relevant, as the x-y plane is parallel to the ground (i.e., the horizon). A rotation around the z-axis **458** is not relevant in this calculation, as movement in this plane does not change the angle of the device against the ground. For example, if device **452** is lying on a flat surface, with the screen facing upwards, x-axis **456** equals −x, y-axis **454** equals y, and z-axis **458** equals −z. The degree values of device **452** against the x-axis and the y-axis are all zero in this example. When device **452** begins to rotate around the x-axis **456** with the z-axis **458** in the y direction, the rotation degree is positive. When device **452** begins to rotate around the x-axis **456** with z-axis **458** in the −y direction, the rotation degree is negative. If the rotation degree is found to be in the range of (−180° to −90°) and (90° to 180°), the screen is in a downward facing direction, which means that the angle against the ground is acute (less than 90°). This same range can be obtained for the rotation around the y-axis **454**, in which case the screen is also downward and the angle against the ground is acute (depicted further in FIGS. **5**A and **5**B).

In other embodiments, the device may use iOS, in which case Core Motion Framework is provided, according to which an instance of CMDeviceMotion encapsulates measurements of the attitude of a device. An instance of the CMAttitude class represents a measurement of the device's attitude at a point in time. A device's attitude refers to the orientation of a body relative to a given frame of reference (i.e., the device's orientation relative to a point of reference, such as the horizon or the ground). Similar algorithms as those described above can be used to obtain the angle of the device relative to the ground.

FIGS. **5**A and **5**B depict examples of different user viewing angles, in accordance with an embodiment of the present invention.

FIG. **5**A depicts a user **502** viewing device **504** at an acute angle **508** relative to ground **506**. In this example, posture detection program **106**, using the methods described with respect to FIGS. **2**B and **4**B, can detect that a user **502** is viewing device **504** at an angle that is less than 90° (i.e., downward displaying screen), and thus is viewing the device lying down, which is considered an improper/unsafe viewing posture.

FIG. **5**B depicts the user **502** viewing device **504** at an obtuse (i.e., greater than 90°) angle **510** relative to ground **506**. In this example, posture detection program **106**, using the methods described with respect to FIGS. **2**B and **4**B, can detect that a user **502** is viewing device **504** at an angle that is greater than 90°, and thus is viewing the device using a proper viewing posture.

FIGS. **6**A and **6**B depict an example of a reminder displayed to a user when viewing the device using an improper viewing posture, in accordance with an embodiment of the present invention.

FIG. **6**A depicts an example of device **602**, displaying applications **604**, in normal use by a user. FIG. **6**B depicts an example of device **602**, after posture detection program **106** detects an improper viewing posture of the user (e.g., viewing too close to the device or viewing while lying down). In this exemplary embodiment, the device operating system causes applications **604** to 'pause' (i.e., become temporarily disabled) and a reminder **606** is shown on the screen of device **602**. Reminder **606** may contain a more specific message, such as "You are too close to the screen; please move the screen further away from you" or "It detects you are watching lying down; please sit up to protect your eyes" depending on the detected improper viewing posture of the user. Device **602** displays both an indication to the user that they are using an improper viewing posture, and an indication as to how the user can adjust their viewing posture to a safer one (e.g., move device further from eyes, or sit up so not watching the device lying down). In this exemplary embodiment, the user can proceed to view the content on the device after posture detection program **106** detects the user has adjusted their posture. In other embodiments, the user may 'tap' the reminder, or perform another gesture which indicates they have seen the reminder, and have adjusted their position. In yet another embodiment, the reminder may display for a certain period of time (e.g., 10 seconds), and then disappear, allowing the OS to resume the operations.

FIG. **7** is a block diagram of internal and external components of a computing device, generally designated **700**, which is representative of the computing devices of FIG. **1**, in accordance with an embodiment of the present invention. It should be appreciated that FIG. **7** provides only an illustration of one implementation and does not imply any limitations with regard to the environments in which different embodiments may be implemented. Many modifications to the depicted environment may be made.

Computing device **700** includes communications fabric **708**, which provides communications between computer processor(s) **702**, memory **704**, cache **706**, persistent storage **710**, communications unit **714**, and input/output (I/O) interface(s) **712**. Communications fabric **708** can be implemented with any architecture designed for passing data and/or control information between processors (such as microprocessors, communications and network processors, etc.), system memory, peripheral devices, and any other hardware components within a system. For example, communications fabric **708** can be implemented with one or more buses.

Memory **704** and persistent storage **710** are computer-readable storage media. In this embodiment, memory **704** includes random access memory (RAM). In general, memory **704** can include any suitable volatile or non-volatile computer readable storage media. Cache **706** is a fast memory that enhances the performance of processors **702** by holding recently accessed data, and data near recently accessed data, from memory **704**.

Program instructions and data used to practice embodiments of the present invention may be stored in persistent storage **710** and in memory **704** for execution by one or more of the respective processors **702** via cache **706**. In an embodiment, persistent storage **710** includes a magnetic hard disk drive. Alternatively, or in addition to a magnetic hard disk drive, persistent storage **710** can include a solid state hard drive, a semiconductor storage device, read-only memory (ROM), erasable programmable read-only memory (EPROM), flash memory, or any other computer readable storage media that is capable of storing program instructions or digital information.

The media used by persistent storage **710** may also be removable. For example, a removable hard drive may be used for persistent storage **710**. Other examples include optical and magnetic disks, thumb drives, and smart cards that are inserted into a drive for transfer onto another computer readable storage medium that is also part of persistent storage **710**.

Communications unit **714**, in these examples, provides for communications with other data processing systems or devices, including resources of a network. In these examples, communications unit **714** includes one or more network interface cards. Communications unit **714** may provide communications through the use of either or both physical and wireless communications links. Program instructions and data used to practice embodiments of the present invention may be downloaded to persistent storage **710** through communications unit **714**.

I/O interface(s) **712** allows for input and output of data with other devices that may be connected to computing device **700**. For example, I/O interface **712** may provide a connection to external devices **716** such as a keyboard, keypad, a touch screen, and/or some other suitable input device. External devices **716** can also include portable computer-readable storage media such as, for example, thumb drives, portable optical or magnetic disks, and memory cards. Software and data used to practice embodiments of the present invention (e.g., software and data) can be stored on such portable computer-readable storage media and can be loaded onto persistent storage **710** via I/O interface(s) **712**. I/O interface(s) **712** also connect to a display **718**.

Display **718** provides a mechanism to display data to a user and may be, for example, a computer monitor, or a television screen.

The present invention may be a system, a method, and/or a computer program product. The computer program product may include a computer readable storage medium (or media) having computer readable program instructions thereon for causing a processor to carry out aspects of the present invention.

The computer readable storage medium can be a tangible device that can retain and store instructions for use by an instruction execution device. The computer readable storage medium may be, for example, but is not limited to, an electronic storage device, a magnetic storage device, an optical storage device, an electromagnetic storage device, a semiconductor storage device, or any suitable combination of the foregoing. A non-exhaustive list of more specific examples of the computer readable storage medium includes the following: a portable computer diskette, a hard disk, a random access memory (RAM), a read-only memory (ROM), an erasable programmable read-only memory (EPROM or Flash memory), a static random access memory (SRAM), a portable compact disc read-only memory (CD-ROM), a digital versatile disk (DVD), a memory stick, a floppy disk, a mechanically encoded device such as punch-cards or raised structures in a groove having instructions recorded thereon, and any suitable combination of the foregoing. A computer readable storage medium, as used herein, is not to be construed as being transitory signals per se, such as radio waves or other freely propagating electromagnetic waves, electromagnetic waves propagating through a waveguide or other transmission media (e.g., light pulses passing through a fiber-optic cable), or electrical signals transmitted through a wire.

Computer readable program instructions described herein can be downloaded to respective computing/processing devices from a computer readable storage medium or to an external computer or external storage device via a network, for example, the Internet, a local area network, a wide area network and/or a wireless network. The network may comprise copper transmission cables, optical transmission fibers, wireless transmission, routers, firewalls, switches, gateway computers and/or edge servers. A network adapter card or network interface in each computing/processing device receives computer readable program instructions from the network and forwards the computer readable program instructions for storage in a computer readable storage medium within the respective computing/processing device.

Computer readable program instructions for carrying out operations of the present invention may be assembler instructions, instruction-set-architecture (ISA) instructions, machine instructions, machine dependent instructions, microcode, firmware instructions, state-setting data, or either source code or object code written in any combination of one or more programming languages, including an object oriented programming language such as Smalltalk, C++ or the like, and conventional procedural programming languages, such as the "C" programming language or similar programming languages. The computer readable program instructions may execute entirely on the user's computer, partly on the user's computer, as a stand-alone software package, partly on the user's computer and partly on a

remote computer or entirely on the remote computer or server. In the latter scenario, the remote computer may be connected to the user's computer through any type of network, including a local area network (LAN) or a wide area network (WAN), or the connection may be made to an external computer (for example, through the Internet using an Internet Service Provider). In some embodiments, electronic circuitry including, for example, programmable logic circuitry, field-programmable gate arrays (FPGA), or programmable logic arrays (PLA) may execute the computer readable program instructions by utilizing state information of the computer readable program instructions to personalize the electronic circuitry, in order to perform aspects of the present invention.

Aspects of the present invention are described herein with reference to flowchart illustrations and/or block diagrams of methods, apparatus (systems), and computer program products according to embodiments of the invention. It will be understood that each block of the flowchart illustrations and/or block diagrams, and combinations of blocks in the flowchart illustrations and/or block diagrams, can be implemented by computer readable program instructions.

These computer readable program instructions may be provided to a processor of a general purpose computer, special purpose computer, or other programmable data processing apparatus to produce a machine, such that the instructions, which execute via the processor of the computer or other programmable data processing apparatus, create means for implementing the functions/acts specified in the flowchart and/or block diagram block or blocks. These computer readable program instructions may also be stored in a computer readable storage medium that can direct a computer, a programmable data processing apparatus, and/or other devices to function in a particular manner, such that the computer readable storage medium having instructions stored therein comprises an article of manufacture including instructions which implement aspects of the function/act specified in the flowchart and/or block diagram block or blocks.

The computer readable program instructions may also be loaded onto a computer, other programmable data processing apparatus, or other device to cause a series of operational steps to be performed on the computer, other programmable apparatus or other device to produce a computer implemented process, such that the instructions which execute on the computer, other programmable apparatus, or other device implement the functions/acts specified in the flowchart and/or block diagram block or blocks.

The flowchart and block diagrams in the Figures illustrate the architecture, functionality, and operation of possible implementations of systems, methods, and computer program products according to various embodiments of the present invention. In this regard, each block in the flowchart or block diagrams may represent a module, segment, or portion of instructions, which comprises one or more executable instructions for implementing the specified logical function(s). In some alternative implementations, the functions noted in the block may occur out of the order noted in the figures. For example, two blocks shown in succession may, in fact, be executed substantially concurrently, or the blocks may sometimes be executed in the reverse order, depending upon the functionality involved. It will also be noted that each block of the block diagrams and/or flowchart illustration, and combinations of blocks in the block diagrams and/or flowchart illustration, can be implemented by special purpose hardware-based systems that perform the specified functions or acts or carry out combinations of special purpose hardware and computer instructions.

The descriptions of the various embodiments of the present invention have been presented for purposes of illustration, but are not intended to be exhaustive or limited to the embodiments disclosed. Many modifications and variations will be apparent to those of ordinary skill in the art without departing from the scope and spirit of the invention. The terminology used herein was chosen to best explain the principles of the embodiment, the practical application or technical improvement over technologies found in the marketplace, or to enable others of ordinary skill in the art to understand the embodiments disclosed herein.

What is claimed is:

1. A method for regulating viewing posture, the method comprising:

identifying, by a front-facing camera, a single eye of a user of a device, based on a set of attributes of the single eye;

calculating, by one or more processors, a distance between the single eye of the user of the device and a screen of the device;

determining, by the one or more processors, the distance between the single eye of the user of the device and the screen of the device, based on the distance between the front-facing camera and the single eye of the user of the device and the distance between the front-facing camera and a center of the device;

determining, by the one or more processors, whether the distance between the single eye of the user of the device and the screen of the device is below a threshold, wherein the threshold is a predetermined distance, based on a type of the device in use; and

responsive to determining that the distance between the single eye of the user of the device and the screen of the device is below the threshold, sending, by the one or more processors, feedback to the user of the device;

responsive to determining that the user is positioned close to the screen of the device based on determining that the distance between the single eye of the user of the device and the screen of the device is below the threshold, disabling, by the one or more processors, a plurality of applications in use, as contained within the screen of the device, while simultaneously sending the feedback to the user of the device, wherein the feedback is a respective message associated with detecting an improper viewing posture-type;

detecting, by the one or more processors, the improper viewing posture-type, wherein the improper viewing posture-type comprises: the user positioned is close to the screen of the device based on the distance between the single eye of the user of the device and the screen of the device and the orientation of the user relative to the screen of the device; and

responsive to determining that the user of the device has adjusted the improper viewing posture-type and provided input to the device dismissing the respective message, enabling, by the one or more processors, the plurality of applications for use on the device.

2. The method of claim **1**, wherein detecting the improper viewing posture-type, comprise:

receiving, from an embedded sensor, information detailing an angle of the device relative to a vantage point;

determining, by the one or more processors, whether the angle of the device relative to the vantage point is greater than zero degrees and less than 90 degrees; and

responsive to determining that the angle of the device relative to the vantage point is greater than or equal to zero degrees and less than 90 degrees, sending, by the one or more processors, an indication to the user of the device.

3. The method of claim **2**, wherein the improper posture-type comprises one of: viewing the device below a distance threshold and viewing the device in a lying down position.

4. The method of claim **2**, wherein determining, by the one or more processors, whether the angle of the device relative to the vantage point is greater than or equal to zero degrees and less than 90 degrees comprises:

gathering data, from an orientation sensor of the device, relative to the vantage point; and

computing, by the one or more processors, an orientation of the device relative to the vantage point, based on a rotation matrix, wherein the rotation matrix comprises a number of degrees of rotation around an x-axis, a y-axis, and a z-axis.

5. The method of claim **1**, wherein calculating the distance between the single eye of the user of the device and the screen of the device comprises:

emitting, by the front-facing camera, an infrared ray, wherein the emitted infrared ray ends at the single eye of the user of the device;

determining, by the one or more processors, a distance between the front-facing camera and the center of the device; and

calculating, by the one or more processors, the distance between the front-facing camera and the single eye of the user of the device, using a distance obtained from information associated with the emitted infrared ray and the distance between the front-facing camera and the center of the device.

6. The method of claim **1**, wherein the device simultaneously calculates the distance between the single eye of the user of the device and the screen of the device and calculates an angle of the device relative to a vantage point.

* * * * *