I. ANDERSON.

SHOW CASE.

APPLICATION FILED MAY 18, 1910.

986,667.

Patented Mar. 14, 1911.

Fig. 1.

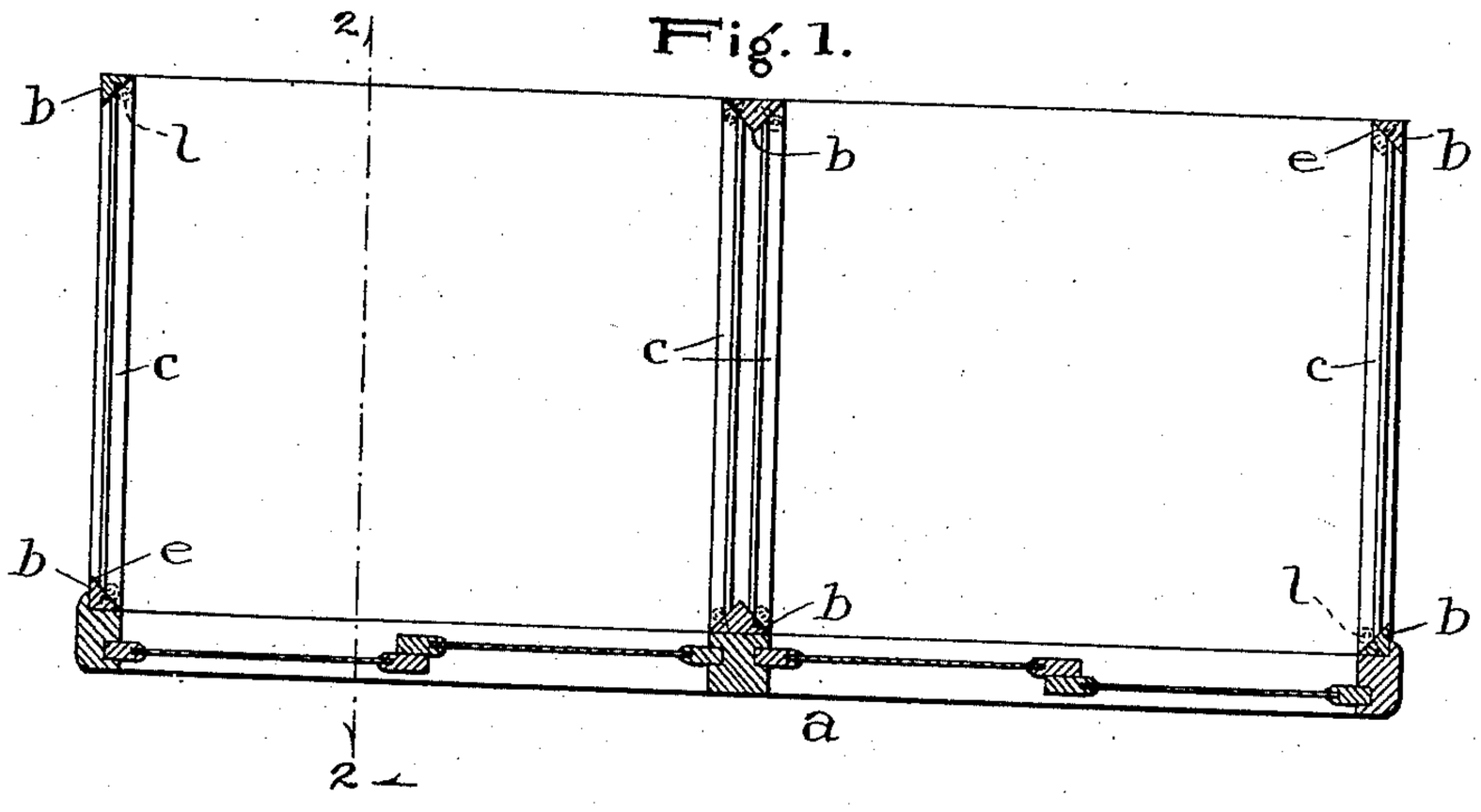

Fig. 2

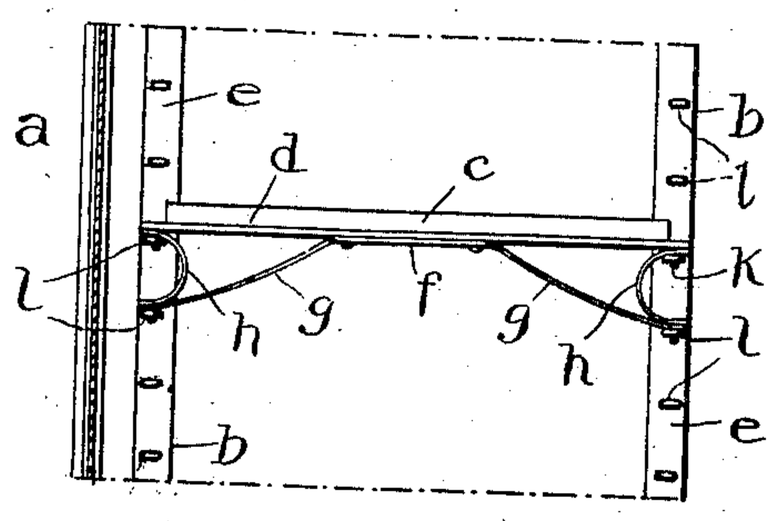

Fig. 3.

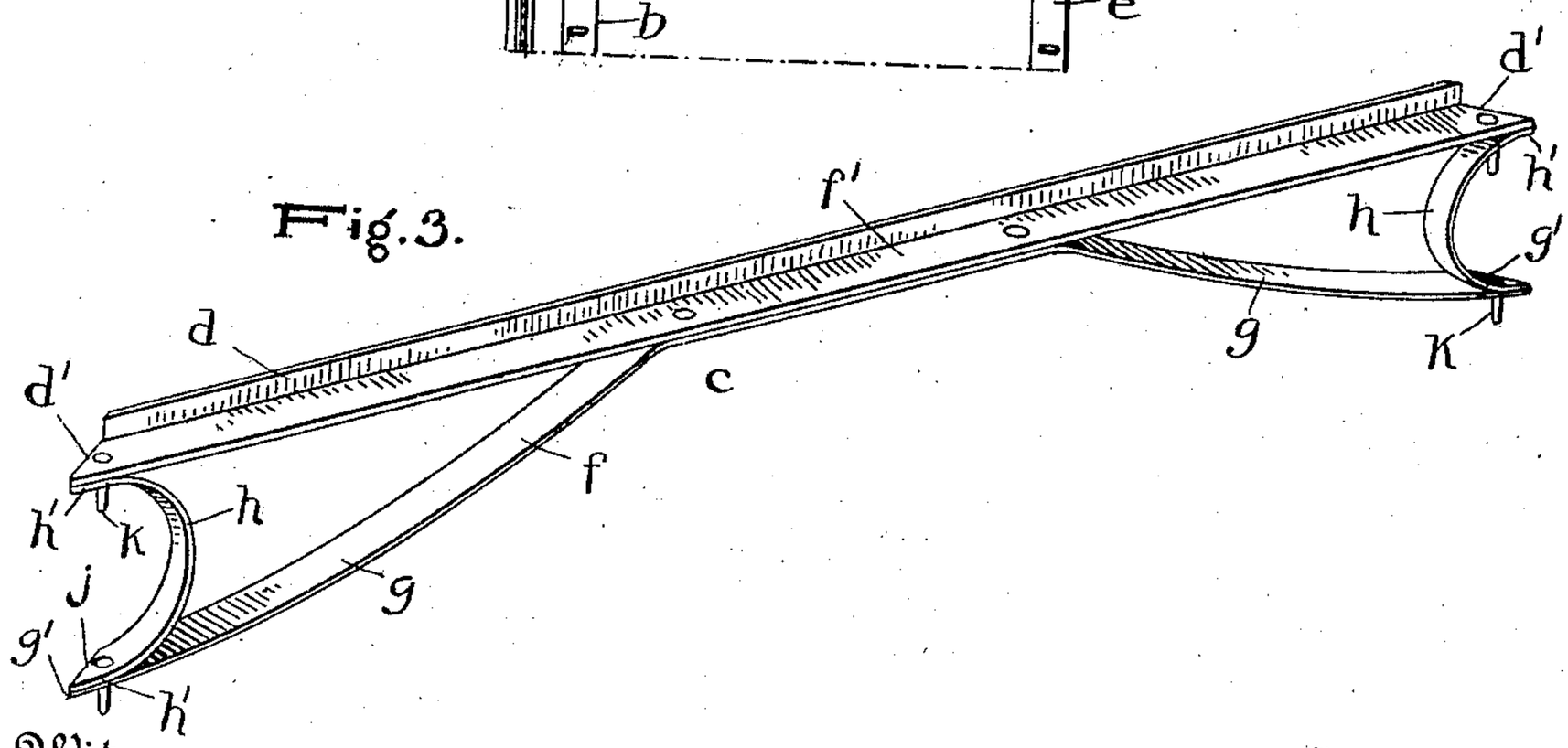

Witnesses

Stuart Hilder.

Francis W. Anderson

Inventor

Isaac Anderson

by E. W. Anderson & Son

his Attorneys

THE NORRIS PETERS CO., WASHINGTON, D. C.

UNITED STATES PATENT OFFICE.

ISAAC ANDERSON, OF DORCHESTER, MASSACHUSETTS.

SHOW-CASE.

986,667. Specification of Letters Patent. Patented Mar. 14, 1911.

Application filed May 18, 1910. Serial No. 562,080.

To all whom it may concern:

Be it known that I, ISAAC ANDERSON, a citizen of the United States, resident of Dorchester, in the county of Suffolk and State of Massachusetts, have made a certain new and useful Invention in Show-Cases; and I declare the following to be a full, clear, and exact description of the same, such as will enable others skilled in the art to which it appertains to make and use the invention, reference being had to the accompanying drawings, and to letters or figures of reference marked thereon, which form a part of this specification.

Figure 1 is a longitudinal horizontal section of a show case having my invention applied thereto. Fig. 2 is a section on the line 2—2 Fig. 1. Fig. 3 is a perspective view of my show case bracket support.

The invention has relation to show cases, and it consists in the novel construction and combinations of parts as hereinafter set forth.

In the accompanying drawings illustrating the invention, the letter *a* designates the show case, having upright corner posts *b*, *b*, of wedge or right-triangle form in cross section. The bracket *c* is designed to span the interval between opposite posts *b*, *b*, and is provided with an upper straight spring metal strip *d* of L-form in cross section for the reception of the edge of the shelf to be supported, said strip having oblique ends *d'*, *d'*, of proper angular relation to fit closely against the outer walls *e*, *e*, of the corner posts corresponding to the hypotenuse of the triangle in cross section.

Centrally connected to the strips *d* at its straight central portion *f'* is a lower spring metal strip *f*, having downward extending end portions *g*, *g*, terminating in line with the ends of the upper strip and having also oblique ends *g'*, *g'*, corresponding to the oblique ends of the upper bar and for similar matching purposes.

Spanning the interval between the upper and lower bars *b* and *f* at each end thereof is a vertical arc-form spring metal brace strip *h*, provided with straight plane end extensions *h'*, *h'* fitting closely against the ends of the upper and lower strips and soldered or brazed thereto, each brace strip having oblique ends *j*, *j*, matching the oblique ends of the upper and lower strips.

Connecting the ends of the upper and lower strips and the brace strips are downward extending studs *k*, *k*, soldered or brazed in perforations of such ends, and designed to fit removably in screw eyes *l*, *l*, of the corner posts *b*, *b*.

The ledge bracket is of light, neat and strong character and being of skeleton form is inconspicuous. It is readily placed in position and as readily removed.

Having thus described my invention, what I claim as new and desire to secure by Letters Patent is:—

The combination with a show case having corner strips of triangular form in cross section and carrying screw eyes, of a ledge bracket comprising an elongated straight metal top strip having an upward extending back flange, an elongated lower metal strip having attachment at its central portion to the central portion of said top strip, and downward extending end portions, arc-form metal brace strips connecting said downward extending end portions and the end portions of said top strip, and terminal studs at the ends of said top strip and downward extending end portions of said lower strip for engagement with said screw eyes, said upper strip and said lower strip having oblique ends.

In testimony whereof I affix my signature, in presence of two witnesses.

ISAAC ANDERSON.

Witnesses:
E. H. R. BURROUGHS,
OSCAR HILL.

Copies of this patent may be obtained for five cents each, by addressing the "Commissioner of Patents. Washington, D. C."