K. F. UNGERER & E. BECKER.

MACHINE FOR MANUFACTURING METAL CORDS.

APPLICATION FILED MAR. 27, 1908.

979,110.

Patented Dec. 20, 1910.

4 SHEETS—SHEET 1.

Fig. 1.

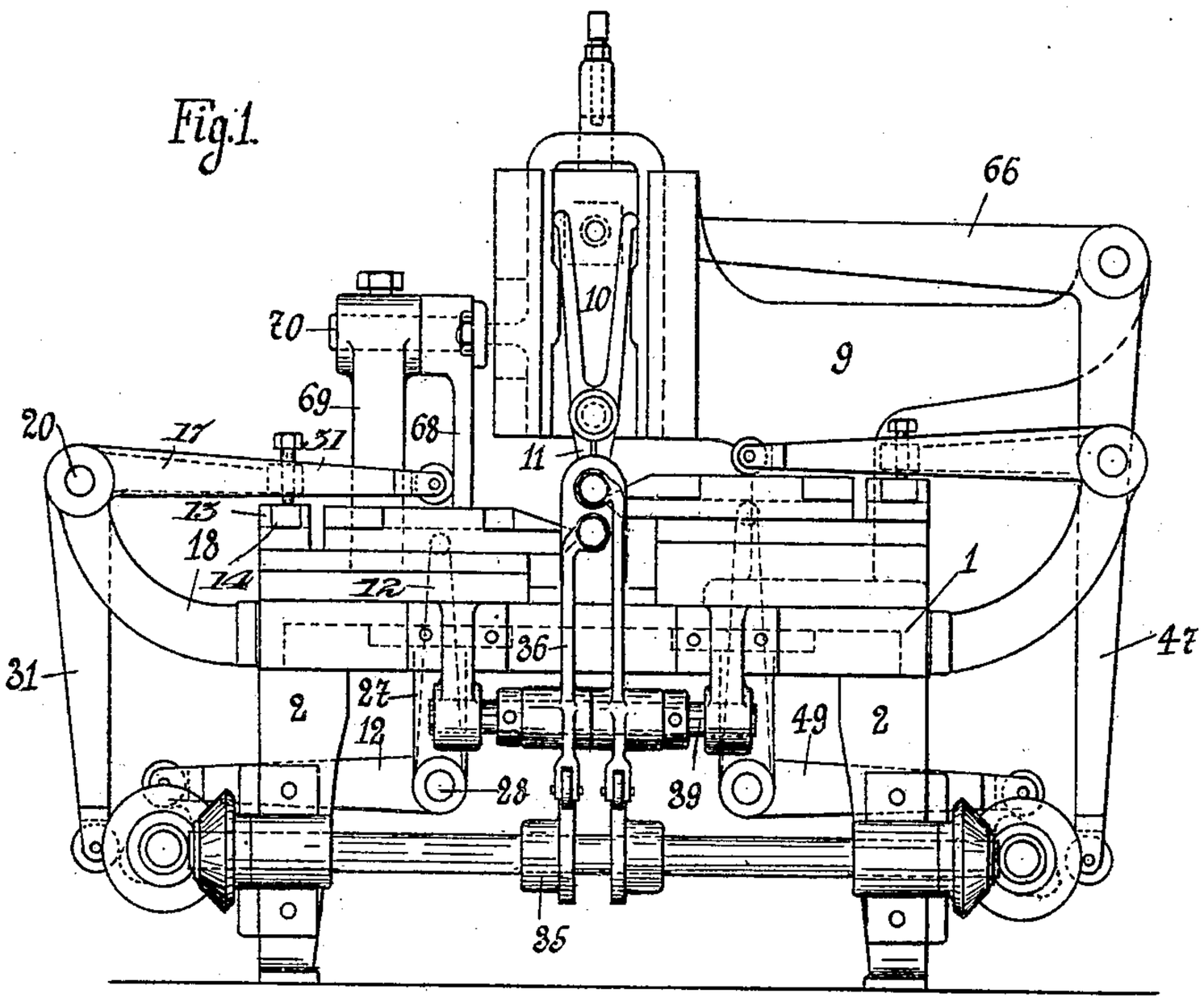

Fig. 2.

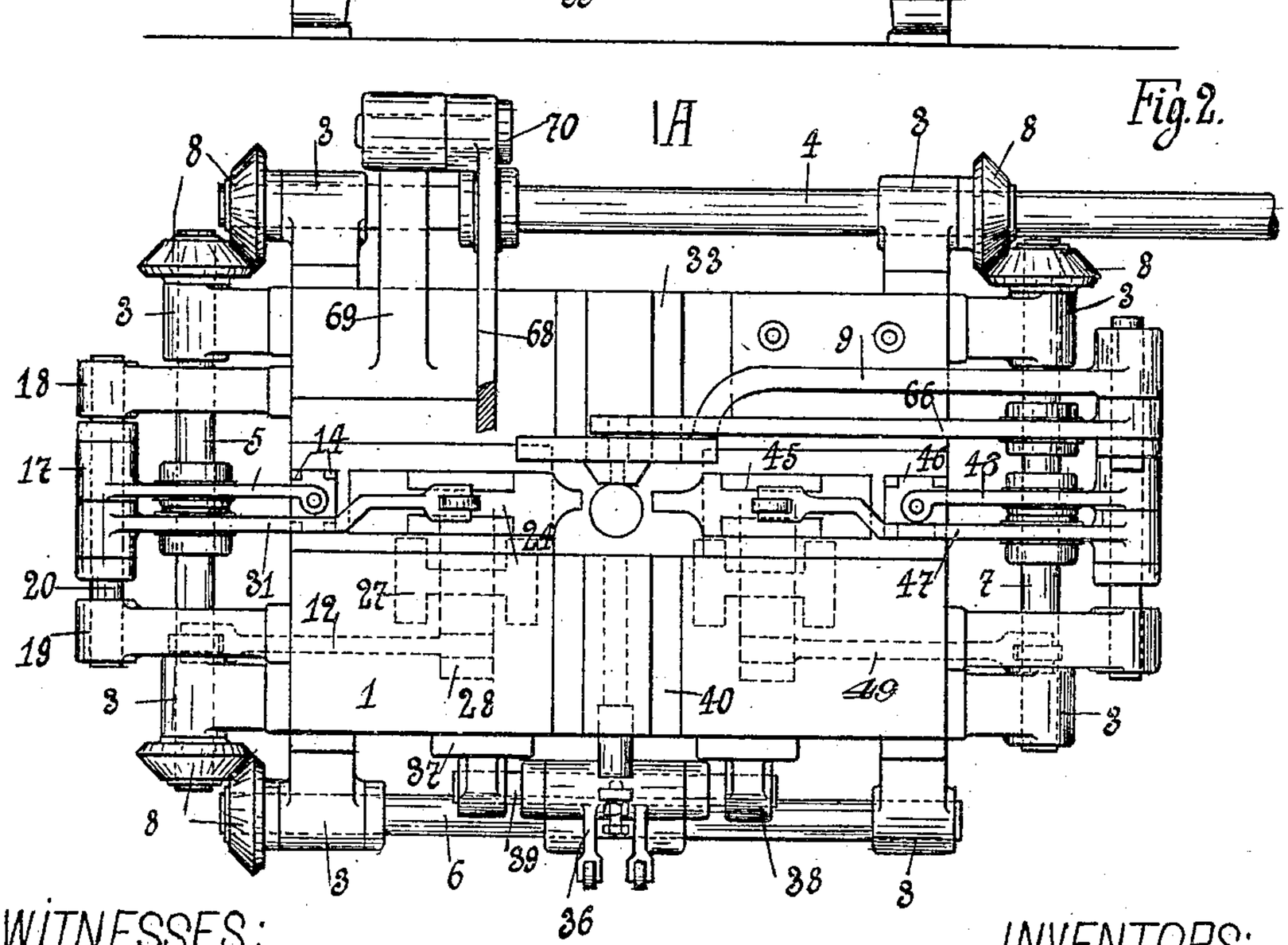

WITNESSES:

R. Bufalb.

W. Diederichs.

INVENTORS:

Karl Friedr. Ungerer,

and Emil Becker

THE NORRIS PETERS CO., WASHINGTON, D. C.

K. F. UNGERER & E. BECKER.

MACHINE FOR MANUFACTURING METAL CORDS.

APPLICATION FILED MAR. 27, 1908.

979,110. Patented Dec. 20, 1910.

4 SHEETS—SHEET 2.

Fig. 3.

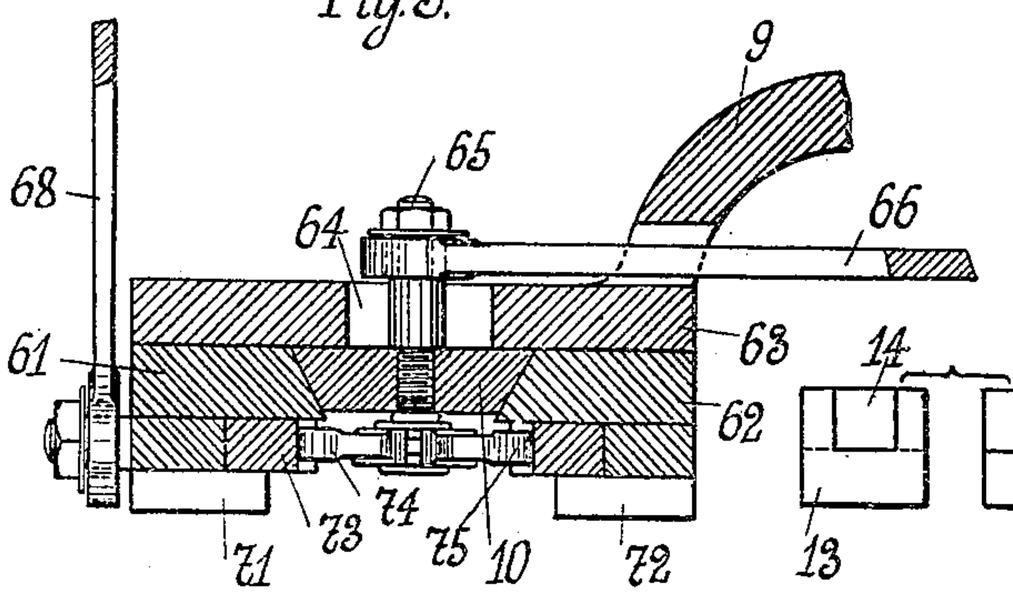

Fig. 5.

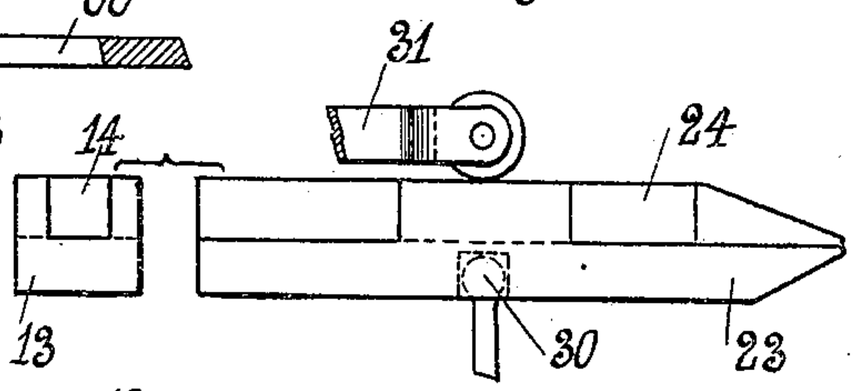

Fig. 4.

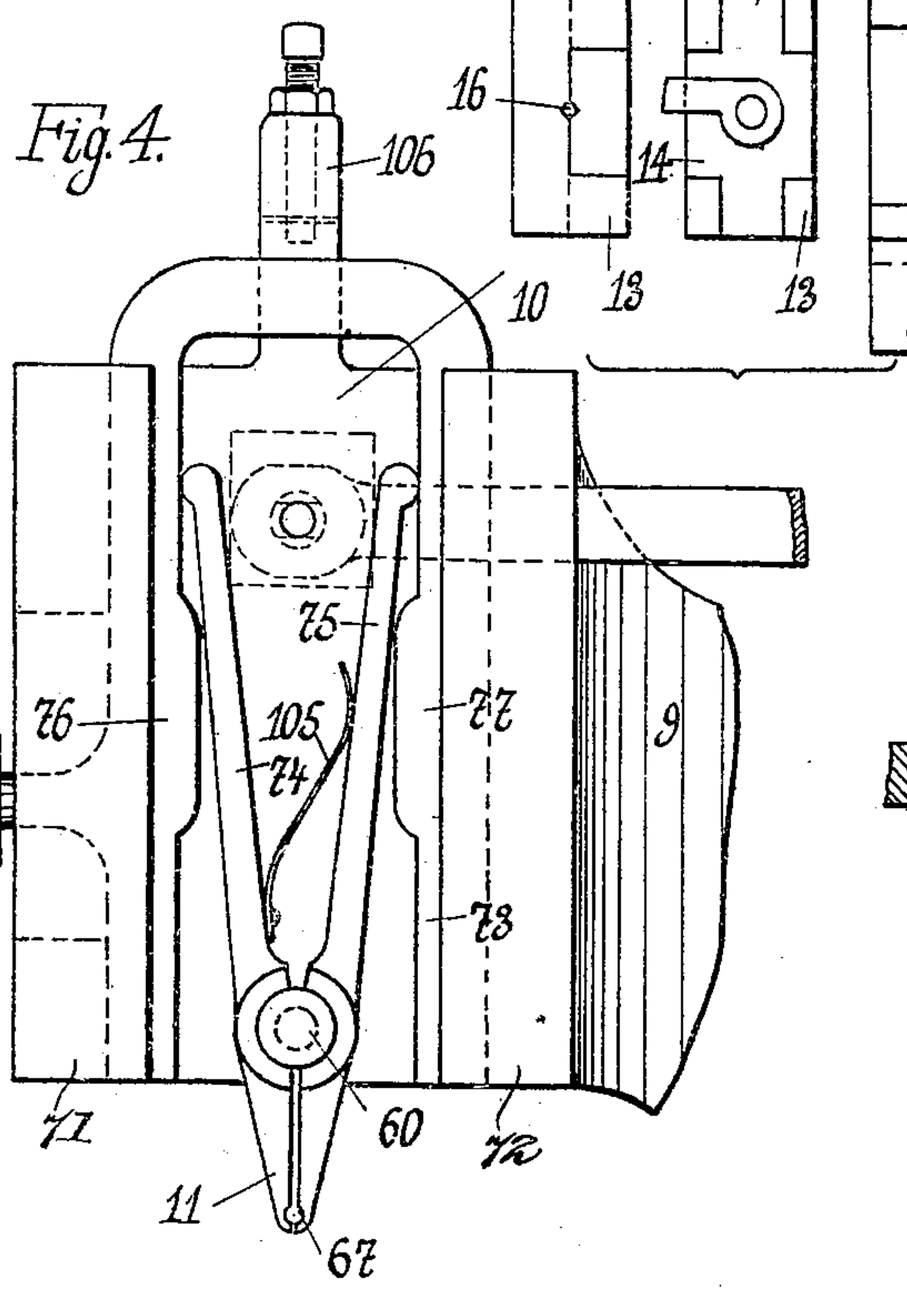

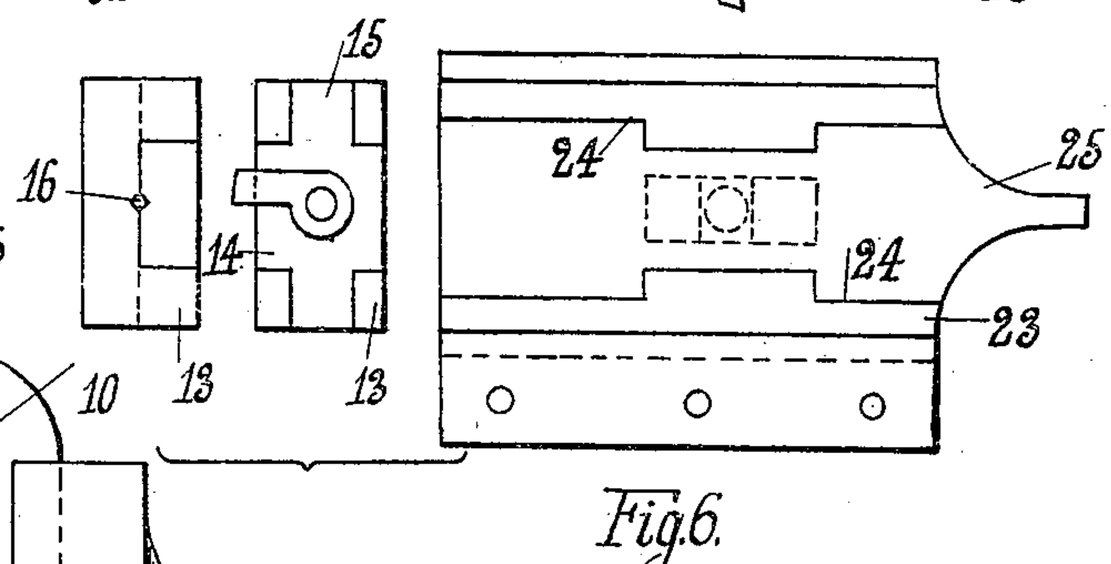

Fig. 6.

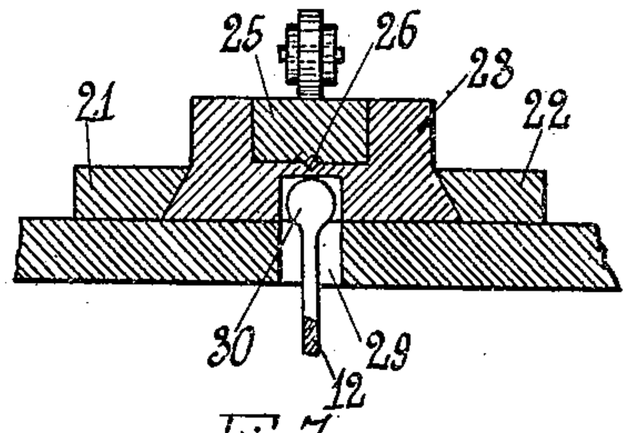

Fig. 7.

WITNESSES:

R. Bisfalb.

W. Diederichs

INVENTORS:

Karl Friedr. Ungerer;

and Emil Becker

THE NORRIS PETERS CO., WASHINGTON, D. C.

K. F. UNGERER & E. BECKER.

MACHINE FOR MANUFACTURING METAL CORDS.

APPLICATION FILED MAR. 27, 1908.

979,110. Patented Dec. 20, 1910.

4 SHEETS—SHEET 3.

Fig. 8.

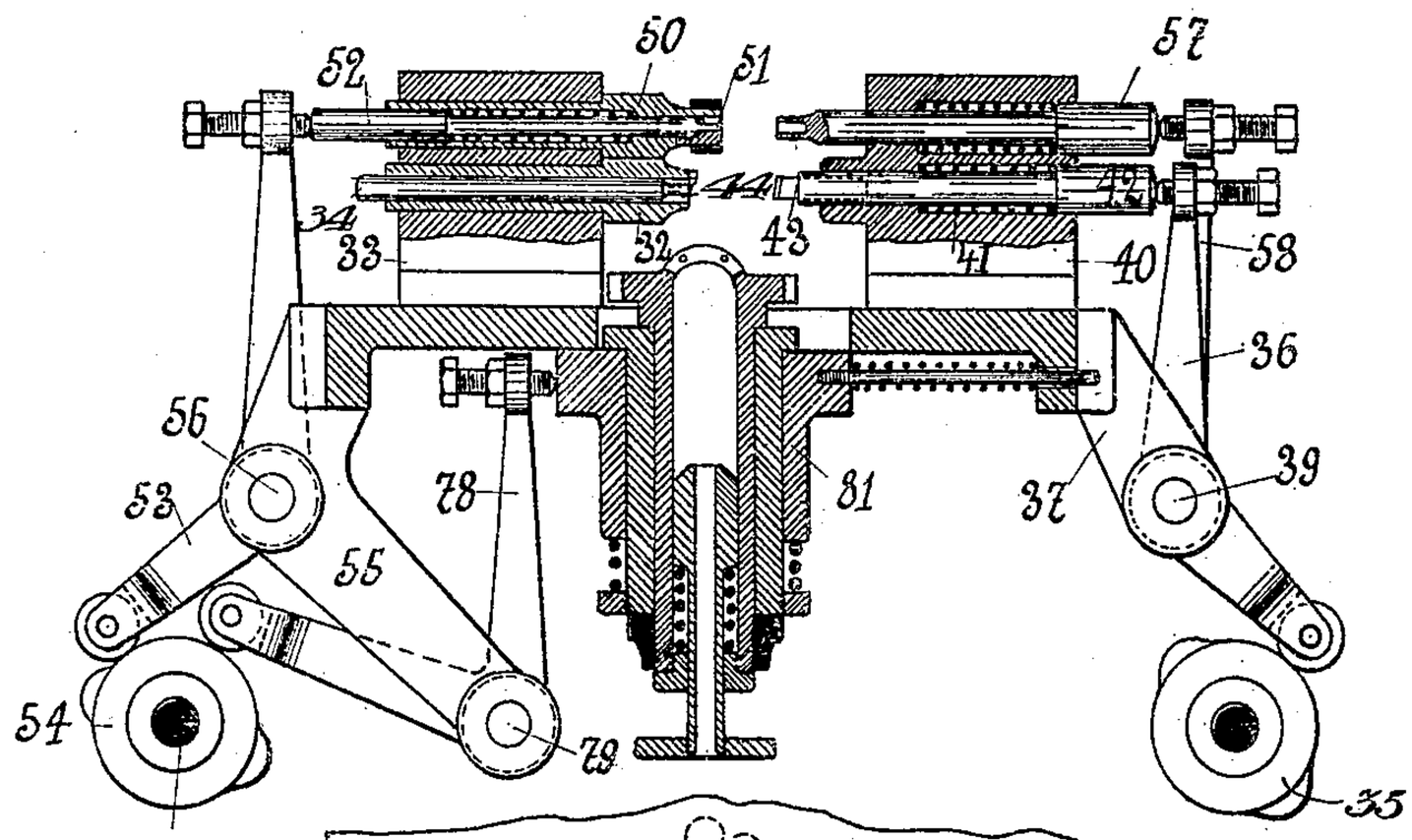

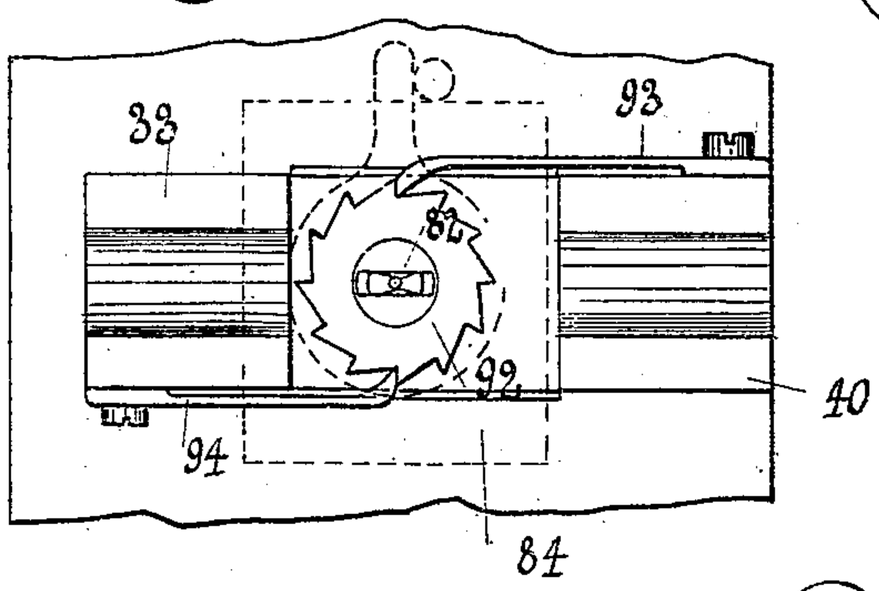

Fig. 9.

Fig. 10.

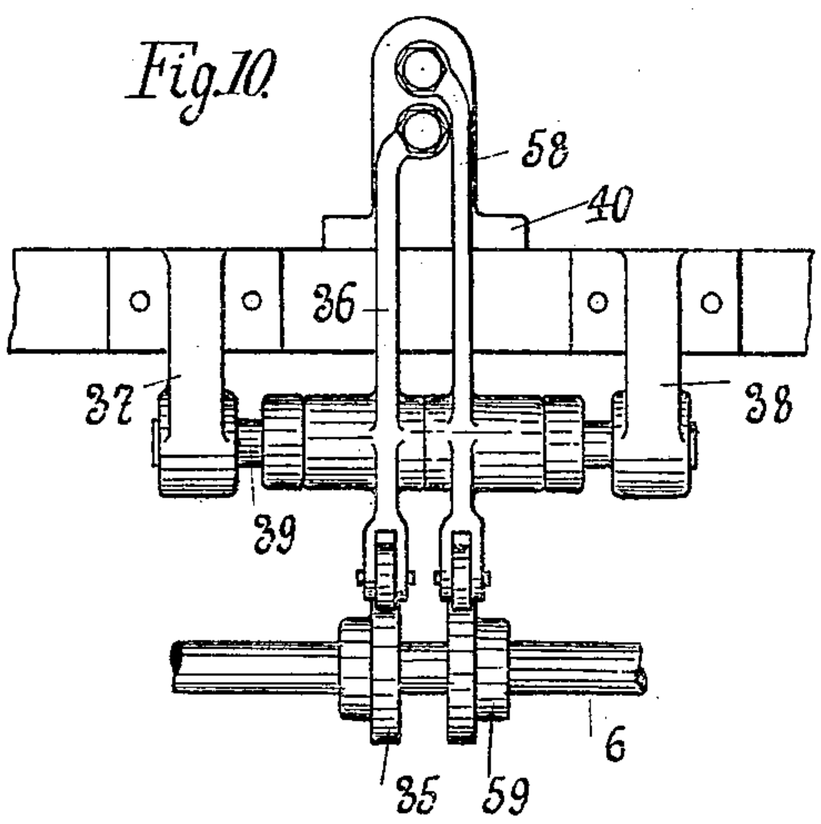

Fig. 11.

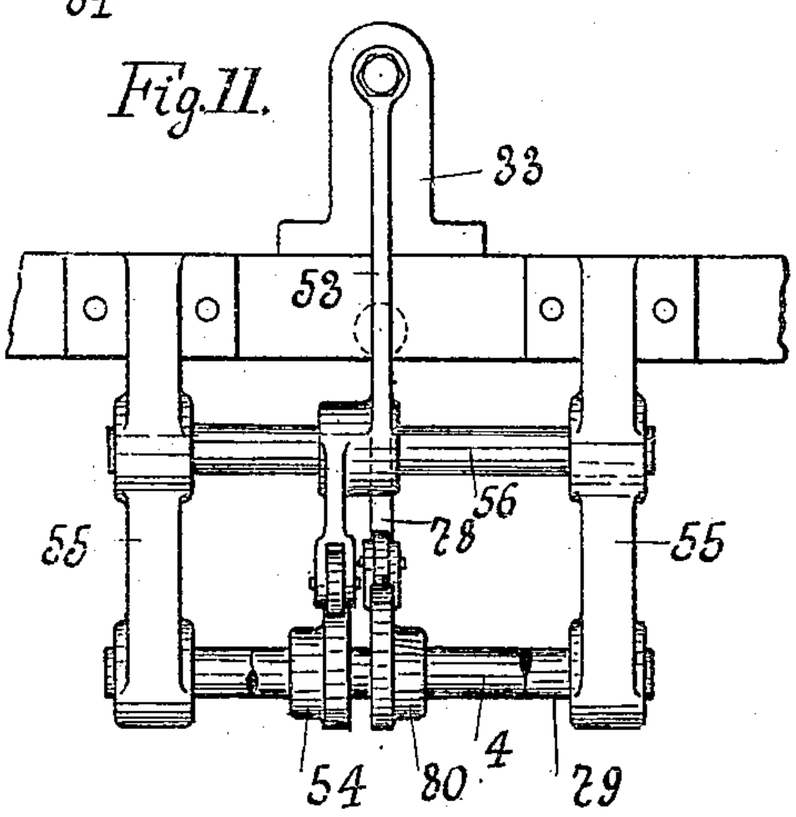

WITNESSES:

R. Bufall.

W. Diederichs.

INVENTORS:

Karl Friedr. Ungerer,

and Emil Becker

THE NORRIS PETERS CO., WASHINGTON, D. C.

K. F. UNGERER & E. BECKER.

MACHINE FOR MANUFACTURING METAL CORDS.

APPLICATION FILED MAR. 27, 1908.

979,110. **Patented Dec. 20, 1910.**

4 SHEETS—SHEET 4.

Fig. 12

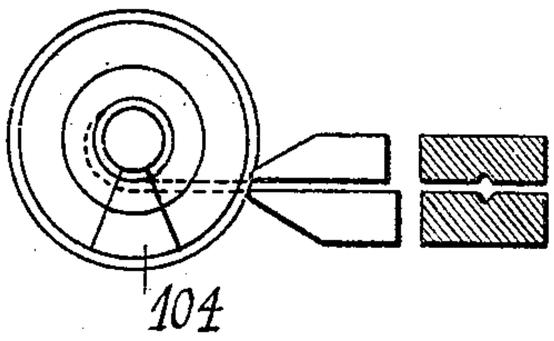

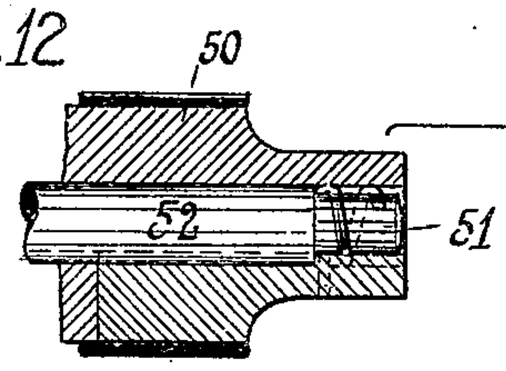

Fig. 13.

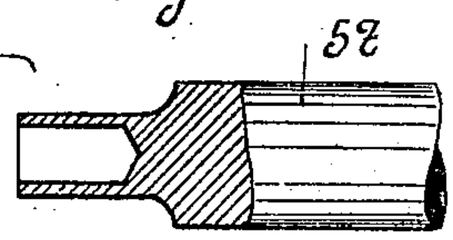

Fig. 14

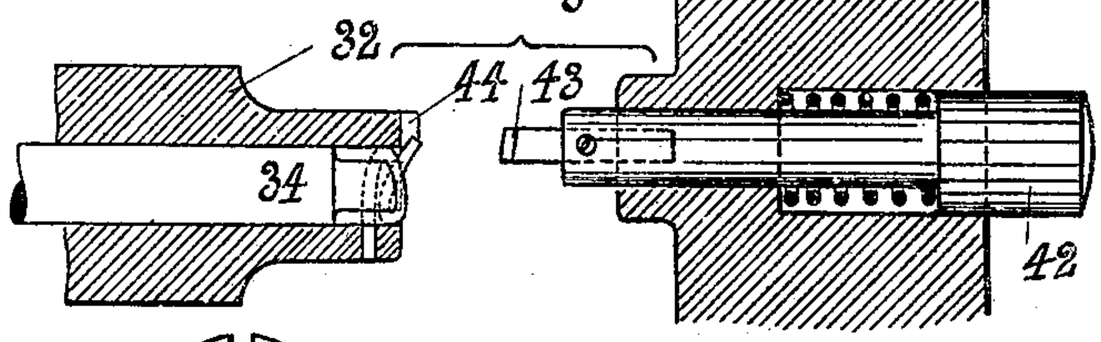

Fig. 15.

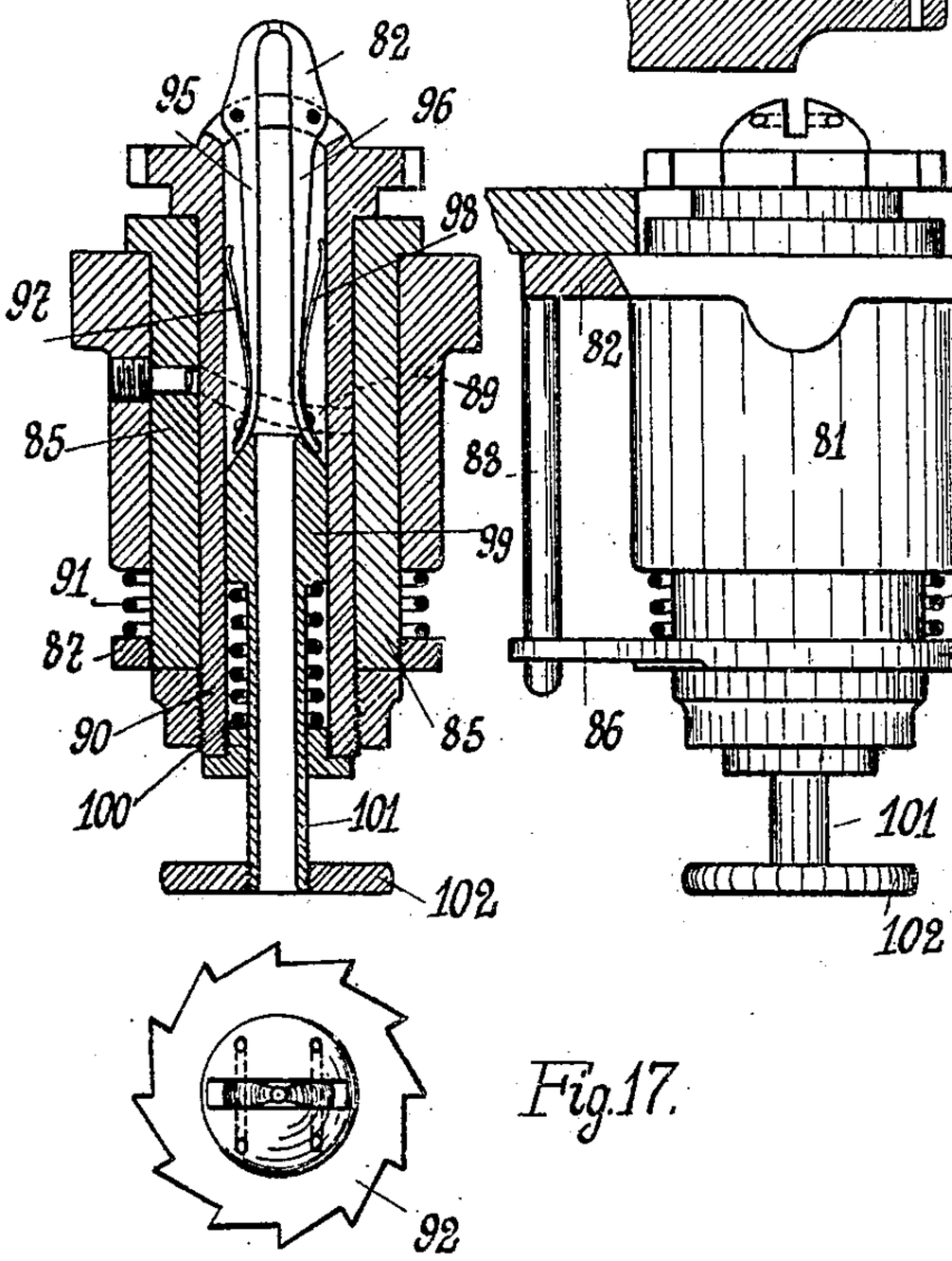

Fig. 16

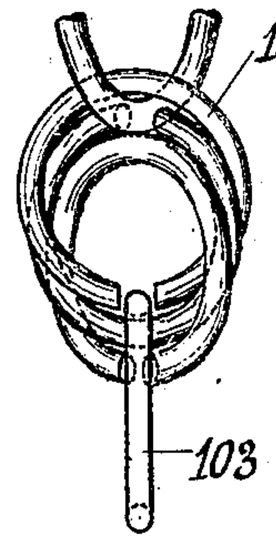

Fig. 18.

Fig. 17.

Fig. 19.

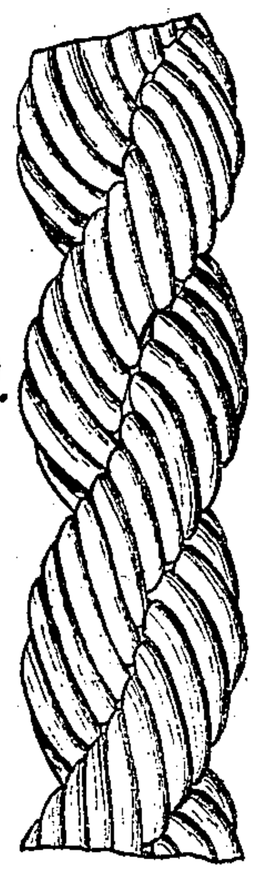

WITNESSES:

R. Bufalb.

W. Diedericks.

INVENTORS:

Karl Friedrich Ungerer

and Emil Becker

THE NORRIS PETERS CO., WASHINGTON, D. C.

UNITED STATES PATENT OFFICE.

KARL FRIEDRICH UNGERER AND EMIL BECKER, OF PFORZHEIM, GERMANY.

MACHINE FOR MANUFACTURING METAL CORDS.

979,110. Specification of Letters Patent. Patented Dec. 20, 1910.

Application filed March 27, 1908. Serial No. 423,563.

To all whom it may concern:

Be it known that we, KARL FRIEDRICH UNGERER and EMIL BECKER, subjects of the German Emperor, and residents of Pforzheim, in Baden, Germany, have invented certain new and useful Improvements in Machines for Manufacturing Metal Cords, of which the following is a specification.

This invention relates to a machine for the manufacture of the so-called metal cords which consist of split rings crossed in their flanks and hung into each other in such a manner that the outside of the chain thus formed resembles the spiral windings of a cord.

Heretofore these chains have been made by hand only, and the object of the present invention is to provide a machine by which they may be constructed.

A structural embodiment of the invention is illustrated in the accompanying drawings wherein:—

Figures 1 and 2 are an elevation and a plan respectively, of the improved machine; Fig. 3 is a cross section through the slide designed for the reception of the vertically moving tongs; Fig. 4 is a view of these tongs with the driving and guiding members therefor; Figs. 5, 6 and 7 are a side view, plan and cross section respectively, of the devices for clamping and advancing the material; Fig. 8 is a cross section through the machine, on the line A—B of Fig. 2; Fig. 9 is a plan of the movable double sleeve and the tongs carried thereby; Figs. 10 and 11 are views of the levers for operating the tools which effect the formation of the rings; Figs. 12 and 13 are a side view and section respectively of the upper tools, and Fig. 14 of the lower tools for forming the rings; Fig. 15 is a longitudinal section through the movable double sleeve, showing the tongs associated therewith; Fig. 16 is a side elevation of the double sleeve, and Fig. 17 a plan of the upper part of said sleeve; Fig. 18 is a detail view showing several rings hung into each other, and Fig. 19 is a portion of the finished metal cord, the two latter figures being shown on an enlarged scale.

The metal cord to be formed consists of single rings 103, which are split in order to be capable of being hung into each other, this being effected in such a manner that the split portions of the rings engage alternately one ring on the lower side and the next one on the upper side, the flanks of two crossed rings touching each other.

The machine comprises a table 1 on each of the four feet 2 of which two bearings 3 are cast, said bearings supporting four shafts 4, 5, 6 and 7. The latter are interconnected through the medium of bevel gears 8 and carry the cams for operating the working levers hereinafter referred to. The drive is effected from shaft 4 in any suitable manner, as, for instance, by a belt and pulley. To the table is fixed a standard 9 carrying a slide 10 on which are mounted the tongs 11 that serve to introduce the single rings.

Before starting the machine, a finished piece of metal cord is introduced into the tongs 82 in such a manner that the last ring projects beyond the tongs. When the machine is started, the mechanisms which form the rings are first actuated, the lower of the two mechanisms employed being actuated before the upper. In each of these mechanisms there are included devices for advancing and for clamping the wires, the construction of which is the same for both of said mechanisms. Each clamping device comprises a jaw 13 firmly fixed to the table, and a movable jaw 14 adapted to be pressed upon the fixed jaw. The movable jaw 14 is provided with lateral projections 15, which engage in notches in the fixed jaw 13, the arrangement being such that the jaw 14 is capable of vertical but not of horizontal movement. The adjacent faces of both jaws are formed with mating grooves which combine to produce a seat 16 (Fig. 6) designed for the reception of the wire to be advanced, the wire being retained in said seat by means of an angle lever 17 loosely pivoted on a spindle 20 supported in brackets 18 and 19. This lever is actuated by a cam keyed on shaft 5 (Figs. 1 and 2), which cam, by moving the lower arm of the lever outwardly at the proper time, causes the upper arm to bear down upon the jaw 14, whereby the wire located between said jaws is clamped in the seat 16. The advancing device or carrier associated with this clamp comprises a lower jaw 23 arranged to slide on the table by means of its dovetail connection 21, 22, (Fig.

7), and an upper jaw 25 which rests on said lower jaw and is provided with projections 24, that fit in notches formed therein. The adjacent faces of the jaws 23 and 25 are likewise formed with mating grooves which unite in producing a wire-receiving seat 26. The operation of the slidable lower jaw is effected by an angle-lever 12, (Figs. 1, 2 and 7) which is pivoted on a pin 28 carried by a bracket 27 and has its horizontal arm adapted to be rocked by a cam keyed on shaft 5. The vertical arm of the angle lever 12 projects through a slot 29 in the table and terminates in a ball-head 30 which is received in a seat in said lower jaw 23, (Fig. 7), so that the latter, and with the same the upper jaw 25 connected thereto, are shifted longitudinally when the lever is actuated. The two jaws 23 and 25 of the carrier are pressed together so as to retain the wire in seat 26 by means of an angle-lever 31, (Fig. 1), pivoted to shaft 20 and likewise operated by a cam keyed on shaft 5.

The operation of the clamp and the carrier is as follows:—Supposing that the carrier has reached the limit of its effective movement, *i. e.*, toward the right, the two jaws of the clamp are then pressed together by the angle lever 17 so as to clamp the wire in seat 16. At the same time, the angle lever 31 is rocked away from the jaws of the carrier, which latter is simultaneously retracted by the angle lever 12, the wire remaining engaged by the clamp jaws until the carrier reaches the limit of its rearward movement. The lever 31 is then rocked in the opposite direction so as to press the carrier jaws together against the wire, while at the same time the clamp jaws 13 and 14 are released whereupon the wire is free to be advanced. At right angles to the carrier a sleeve 32 (Fig. 8), is arranged which is supported in a bracket 33 fixed on the table. The forward end of the bore of this sleeve is formed with a spiral groove (Figs. 12 and 14), into which the wire enters through a lateral perforation in said sleeve, the wire being thus caused to wind itself spirally around the reduced free end of the mandrel 34 fitted in the sleeve. As each winding formed comprises about one turn only, the advancing movement of the wire has sufficient power to effect the requisite bending of the wire. The tongs 11 assume at this moment a position directly in front of the sleeve 32, so that the spiral formed during the advance of the wire passes through the last ring of the finished piece of metal cord previously introduced into the tongs 82. When this takes place, the angle lever 36 (Fig. 8), which is actuated by the cam 35 on shaft 6 and mounted on a pin 39 carried by a pair of brackets 37 and 38. (Fig. 10), presses against a tool supported in the bracket 40. This tool comprises a pin 42 (Fig. 8) controlled by a spiral spring 41 and carrying a chisel 43. The chisel when operated cuts off the finished and first closed coil or ring which latter is so disposed that the point at which it is to be cut off lies directly against a tooth 44 provided on the sleeve. At the completion of the cutting operation, the tool 43, 42 moves back to its initial position, while at the same time the carrier moves back in the manner above described.

The formation of the second ring, which is introduced by the tongs 11 from up above, with its split portion directed downward, is effected in the following way: The second feeding mechanism for the wire, viz; the carrier 45, the clamp 46 and the levers 47, 48 and 49 (which are actuated from cams of the shaft 7) acts in the same manner as the feeding mechanism already described. By means of the second feeding mechanism a second wire is introduced through a lateral perforation (Fig. 13), into the upper sleeve 50, of the bracket 33 and bent in spiral fashion around the reduced end 51 of the mandrel 52 disposed in said sleeve. When the wire is advanced so far that the first coil or ring is almost closed, the lever 53 which is actuated from cam 54 on the shaft 4 moves the mandrel 52 forward, said lever being pivoted on a pin 56 carried by the brackets 55 fixed to the table. On the forward movement of the mandrel 52 the ring is cut off. For this purpose there is inserted in the lower part of the sleeve 50 a sharpened wedge 104, (Fig. 12), which coacts with the reduced end 51 of the mandrel 52, said mandrel having formed therein a groove wherein the sharpened edge of the wedge is received when the mandrel is moved forward. Therefore, since the ring lies between said wedge and the shoulder produced by the reduction of the mandrel end, said ring will be severed from the wire upon the bobbin moving forward, of said wedge when the above-mentioned movement of the mandrel takes place.

Simultaneously with the movement of the mandrel 52, the bolt 57 is advanced toward sleeve 50 by a lever 58 pivoted on the pin 39, said lever being actuated by a cam 59 on the shaft 6. During this movement, the bolt 57 abuts against the mandrel end 51, which carries the cut off ring, in such a manner that the ring is clamped on said end by the forward portion of said bolt, which portion is provided with a cavity corresponding in area to the size of the end 51 (Fig. 8). Both parts, viz; the mandrel end 51 and bolt 57 now move together to the right until the clamped ring arrives directly beneath the tongs 11, while at the same time, the carrier 45 moves back again to its initial

position. The tongs 11 are then moved downward. These tongs are connected by a pivot 60 and are attached to slide 10, (Fig. 4), which is arranged for vertical movement in the guides 61, 62 provided upon a beam 63 carried by the standard 9. Through a slot 64 in said beam 63 projects a bolt 65 fixed to the slide 10 and connected to an angle lever 66 which is actuated by a cam on shaft 7. In order to exactly regulate the extent of the downward movement of the tongs 11, the slide 10 carries a set screw 106, which, when said tongs have reached their lowermost position, strikes upon beam 63. The downward movement of the tongs is continued until the opening 67, (Fig. 4), at the point of the jaws of said tongs, (which are then opened) lies directly above the clamped ring just described. At this moment, an angle lever 68 (Fig. 3), which is pivoted on a pin 70 carried by a bracket 69, is actuated by a cam on shaft 4. This angle lever 68 operates a clamping frame 73, which is slidable vertically in guides 71, 72 provided on beam 63. The inner sides of the frame abut against the members 74, 75 of the tongs 11, said members being normally forced apart by a spring 105. The projections 76, 77 of the clamping frame effect at the respective positions of the frame relatively to the tongs, an opening or closing of the latter so that when the ring on the mandrel end 51 is engaged by the closed tongs, the mandrel 52 and bolt 57 return to their initial position shown in Fig. 8. Before further movement of the tongs with the ring held therein takes place, a double sleeve 81, located beneath said tongs, is shifted to the right by an angle lever 78 until the tongs 82 disposed within said sleeve lie directly in line with tongs 11. Lever 78 above referred to is actuated by a cam 80 on shaft 4 and is pivoted on a pin 79 carried by the brackets 55. Sleeve 81 moves in guides 83 arranged beneath the table and its upper portion projects through an opening 84, (Fig. 9) in the table beyond and above the latter. During this movement of said sleeve, an inner sleeve 85 (Fig. 15) which carries a ring 87 having a radial stem 86, is rotated by said stem striking against a projection 88 fixed to the table. Upon the inner wall of the double sleeve 81, a pin is arranged which engages in a spiral groove 89 formed in the inner sleeve 85, so that when said inner sleeve 85 is rotated it will at the same time move upward and cause the inner tube 90 to participate in such movement. The tongs 11 now move farther downward toward the tongs 82 which latter, as already mentioned, carry the previously formed ring. This downward movement is continued until the ring in the tongs 82 can be linked in the ring held in the tongs 11 in such a manner that the flanks of the two rings touch and cross each other. When this takes place, the clamping frame 73 moves upward whereupon the tongs 11 are opened and the ring is liberated, said tongs then returning into their initial position. The inner tube 90 which carries the tongs 82 now returns to the left, and during this rearward movement the stem 86 of the ring 87 recedes from projection 88, and the sleeve 85 turns back and descends under the influence of the spiral springs 91, as far as it had previously ascended at the forward movement of the double sleeve. The object of this upward turning movement is to screw the rings already formed into the opening or mouth of the tongs 82, which mouth is formed with internal threads so as to firmly hold the rings therein.

Before the operation above described is repeated, it is necessary that the inner tube 90, with the tongs 82, be turned as far as the last ring introduced crosswise increases the thickness of the wire laterally. This is effected by means of a ratchet wheel 92, (Fig. 9) provided upon the upper end of the inner tube 90, and formed with as many teeth as the number of rings included in one complete spiral winding. With this ratchet are associated two spring pawls 93, 94 which are fixed on the brackets 33 and 40, respectively. When the inner tube 90 is shifted to the right, one tooth of the ratchet 92 is arrested by the pawl 93, and said tube 90 will be rotated to the extent of one tooth. When the tube returns to its initial position, the pawl 94 engages the next tooth.

In order to effect a uniform closing of the tongs 82 so as to dispose the mouth thereof exactly centrally of the sleeve, it is necessary to always move the two members 95 and 96 of the tongs to the same extent, said members being acted upon by the springs 97 and 98, which are connected to the lower ends thereof and bear against the wall of the inner tube as shown in Fig. 15. With said members 95 and 96 there is operatively associated a conical plunger 99, which is normally forced upwardly by a spring 100 surrounding the tubular stem 101 thereof. On being moved in this direction, the small end of the plunger enters between the lower ends of the members 95 and 96, and forces said ends apart, thereby closing the mouth of the tongs. Plunger 99 has an axial bore which alines with the bore of stem 101, the metal cord being led through these bores. Said stem, at its lower end is provided with a hand wheel 102. If it is desired to open the tongs, for any reason, as, for instance, when introducing the finished piece of metal cord before starting the machine, this can be easily effected by pulling down the hand wheel, whereupon the springs 97 and 98 ef-

fect the desired action. With the same machine a second type of metal cord can be made, in which the split portions of all the rings point downward; this cord, has however, the disadvantage that it does not possess such a great power of resistance as the metal cord in which the split portions of the rings point alternately upward and downward, as above described. If this second kind of metal cord is to be made by the machine, the carrier 24 as well as the sleeve 32 are not operated, so that only the rings which are formed in the sleeve 50 are operated in succession by the tongs 11 and the other accessories. It is however necessary to always close these rings entirely by the tongs 11 upon introducing them into the rings already closed.

Having fully described our invention, what we do claim and desire to secure by Letters Patent is:—

1. In a machine for manufacturing metal cords from split wire rings as specified, the combination with tongs (11) for hanging the rings into the finished cord, of tongs (82) for carrying the finished cord, an inner tube to receive said tongs (82), means to shift said tongs (82) directly beneath said tongs (11), a slide to receive said inner tube and to shift the same in horizontal direction, levers to actuate said slide, and means to shift the cord into the mouth of said tongs, for the purpose set forth.

2. In a machine for manufacturing metal cords from split wire rings as specified, the combination with tongs for carrying the finished cord, of means to turn said tongs for the reception of fresh rings consisting of a star wheel having as many teeth as the number of rings for one whole spiral winding of the cord amounts to, and spring pawls to operate said star wheel, for the purpose set forth.

3. In a machine for manufacturing metal cords, the combination of a pair of alternately acting wire feeding mechanisms; a mechanism associated with each feeding mechanism for coiling the fed wire; a cutting mechanism associated with each coiling mechanism for severing the coils of wire into rings; means for supporting a finished cord; and a single mechanism associated with both of said cutting mechanisms for linking the severed rings to said cord.

4. In a machine for manufacturing metal cords, the combination of a pair of alternately acting ring forming mechanisms; means for supporting a finished cord; and mechanism for linking the rings to said cord.

5. In a machine for manufacturing metal cords, the combination of a pair of alternately acting wire feeding mechanisms; a pair of ring forming mechanisms associated with said feeding mechanisms; a pair of tongs for carrying a finished cord; a pair of tongs arranged above the first named tongs for linking the rings into said cord; and supporting means for operating said tongs.

6. In a machine for manufacturing metal cords, the combination of a pair of alternately acting wire feeding mechanisms; a ring forming mechanism associated with each feeding mechanism; a support for a finished cord; a single mechanism located above said support and arranged to alternately engage the rings formed by said ring forming mechanisms and to link the same to said cord; and means for moving said support relative to the last mentioned mechanism.

7. In a machine for manufacturing metal cords, the combination of a pair of alternately acting wire feeding mechanisms; a mechanism associated with each feeding mechanism for forming the fed wire into separate rings; said mechanism comprising a sleeve into which the adjacent wire is introduced, said sleeve having its bore formed with a spiral groove, a mandrel movable in said sleeve and having a reduced end about which the wire is coiled; and cutting means for severing the coils of the wire into rings; a support for a finished cord; and mechanism located above said support for engaging the severed rings and linking the same into said cord.

8. In a machine for manufacturing metal cords, the combination of a pair of alternately acting wire feeding mechanisms each comprising a clamp and a carrier; a ring forming mechanism associated with each feeding mechanism; a support for a finished cord; and mechanism located above said support for engaging the rings and linking the same into said cord.

9. In a machine for manufacturing metal cords, the combination of a pair of separate wire feeding mechanisms; a pair of alternately acting ring forming mechanisms associated with said feeding mechanisms; a support for a finished cord, and mechanism located above said support and arranged to engage the rings to link the same into said cord.

10. In a machine for manufacturing metal cords, the combination of a pair of alternately acting ring forming mechanisms; a support for a finished cord; mechanism located above said support for engaging the rings from said ring forming mechanisms alternately and for linking the same into said cord; and mechanism for imparting an intermittent step by step rotary movement to said support.

11. In a machine for manufacturing metal cords, the combination of a pair of alternately acting ring forming mechanisms; a support for a finished cord; mechanisms lo-

cated above said support for engaging the rings from said ring forming mechanisms alternately, and for linking the same to said support; mechanism for imparting a bodily lateral movement to said support; and means for imparting a rotary movement to said support during its lateral movement.

In testimony whereof we have hereunto set our hands in the presence of two subscribing witnesses.

KARL FRIEDRICH UNGERER.
EMIL BECKER.

Witnesses:
CARL W. SCHMITT,
WALTER A. LEONARD.