C. A. CARLSON.

NEEDLE AWL.

APPLICATION FILED APR. 15, 1910.

971,663. Patented Oct. 4, 1910.

Fig. 1.

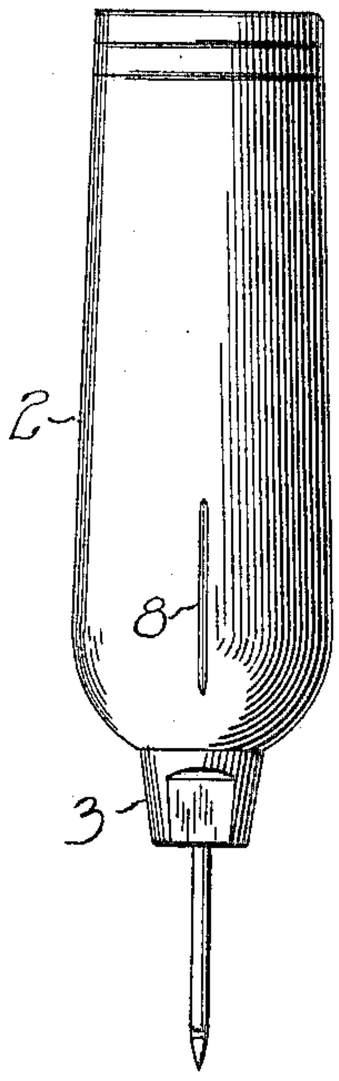

Fig. 2.

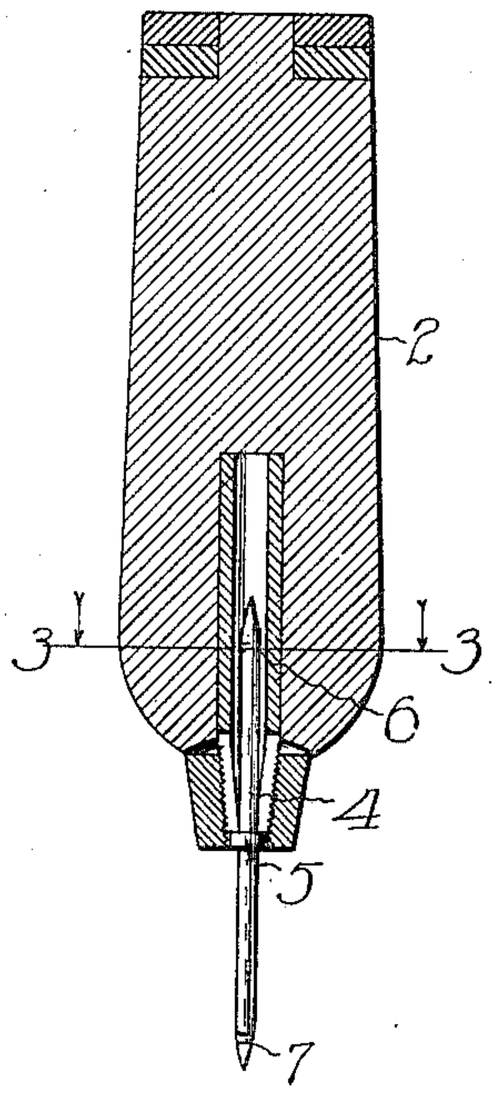

Fig. 3.

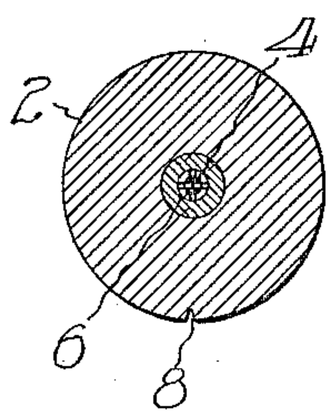

Fig. 4.

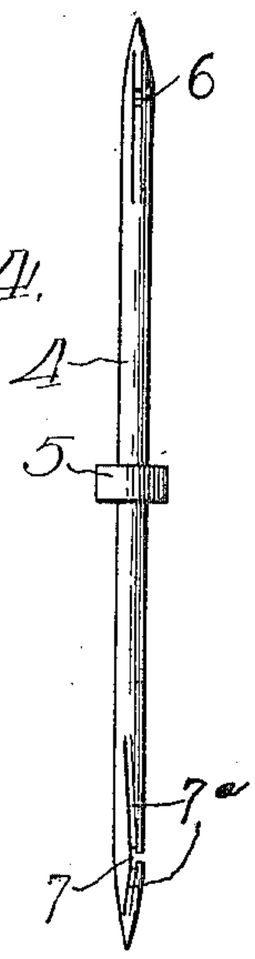

Witnesses:
Robert N. Weir
Arthur W. Carlson

Inventor:
Chas. A. Carlson.
By H. Sanders
Atty.

THE NORRIS PETERS CO., WASHINGTON, D. C.

UNITED STATES PATENT OFFICE.

CHARLES A. CARLSON, OF KOKOMO, INDIANA.

NEEDLE-AWL.

971,663. Specification of Letters Patent. Patented Oct. 4, 1910.

Application filed April 15, 1910. Serial No. 555,573.

To all whom it may concern:

Be it known that I, CHARLES A. CARLSON, a citizen of the United States, residing at Kokomo, in the county of Howard and State of Indiana, have invented certain new and useful Improvements in Needle-Awls, of which the following is a specification.

This invention relates to improvements in awls and more particularly to needle-awls; its object is to produce a device of the kind adapted especially for sewing horse collars, harness and similar heavy work; it is simple in construction and cheap to manufacture.

A full description of the invention will be found in the following specification, particularly pointed out in the claims and illustrated in the accompanying drawings, in which—

Figure 1 is a front elevation of the device. Fig. 2 is a vertical section of the same. Fig. 3 is cross section on line 3—3 of Fig. 2. Fig. 4 shows the needle in elevation.

Like reference characters indicate corresponding parts throughout the several views.

2 is the handle of the device having a hollow chuck 3 in one end thereof.

4 is the needle having a circular collar 5 arranged thereon approximately midway between its extremities. This collar is adapted for insertion in the opening in the chuck as shown in Fig. 2. Needle 4 is provided near one extremity with an eye 6 running transversely therethrough and with an open sided eye 7 near its opposite extremity. Either eye is positioned above the taper that leads to the point of the needle. Eye 7 is preferably of shallow construction having its depth less than the radius of the needle at this point thus positioning it to one side of the vertical center line of the needle which arrangement avoids weakening the needle; graduated grooves 7^a recede from the eye 7 and finally rise to the surface of the needle forming an acute angle with the vertical center line of the needle.

The inner circumference of the open sided needle eye comprises a convex segment diametrically opposite the break which decreases the depth of the eye making it approximately the same diameter as the coarse thread used thus preventing the eye catching upon a strand of thread it may pass or come in contact with in the operation of sewing. The projections formed in making the eye 7 are rounded off to prevent catching on a dangling strand of thread also.

8 is a vertical groove cut in the handle 2 to serve as a guide in connection with the open sided eye 7 when the same is below the upper surface of the work and it is necessary to know the location of the open side in the eye; the open side is, of course, set in vertical alinement with the guide 8 preparatory to using this eye.

This device will be found very convenient in executing certain well known stitches such as the chain, lock or blind stitch.

What I claim is:—

1. A needle-awl comprising a double pointed needle having an eye near either extremity, one of said eyes being open sided, and a handle having a chuck in one end thereof adapted to receive either end of the needle thus holding the opposite end in operative position.

2. A needle-awl comprising a double pointed needle having an eye near either extremity, one of said eyes being open sided, a collar arranged on said needle, a handle having in one end a chuck adapted to receive the said collar and a guide 8 in said handle adapted for coöperation with the aforesaid open sided eye.

In testimony that I claim the foregoing as my own I have hereto affixed my signature in the presence of two subscribing witnesses.

CHARLES A. CARLSON.

Witnesses:

W. H. ARNOLD,

PEARL MILLER.