G. A. GRAYDON.

SEWING MACHINE ATTACHMENT.

APPLICATION FILED NOV. 12, 1909.

962,021.

Patented June 21, 1910.

Fig. 1.

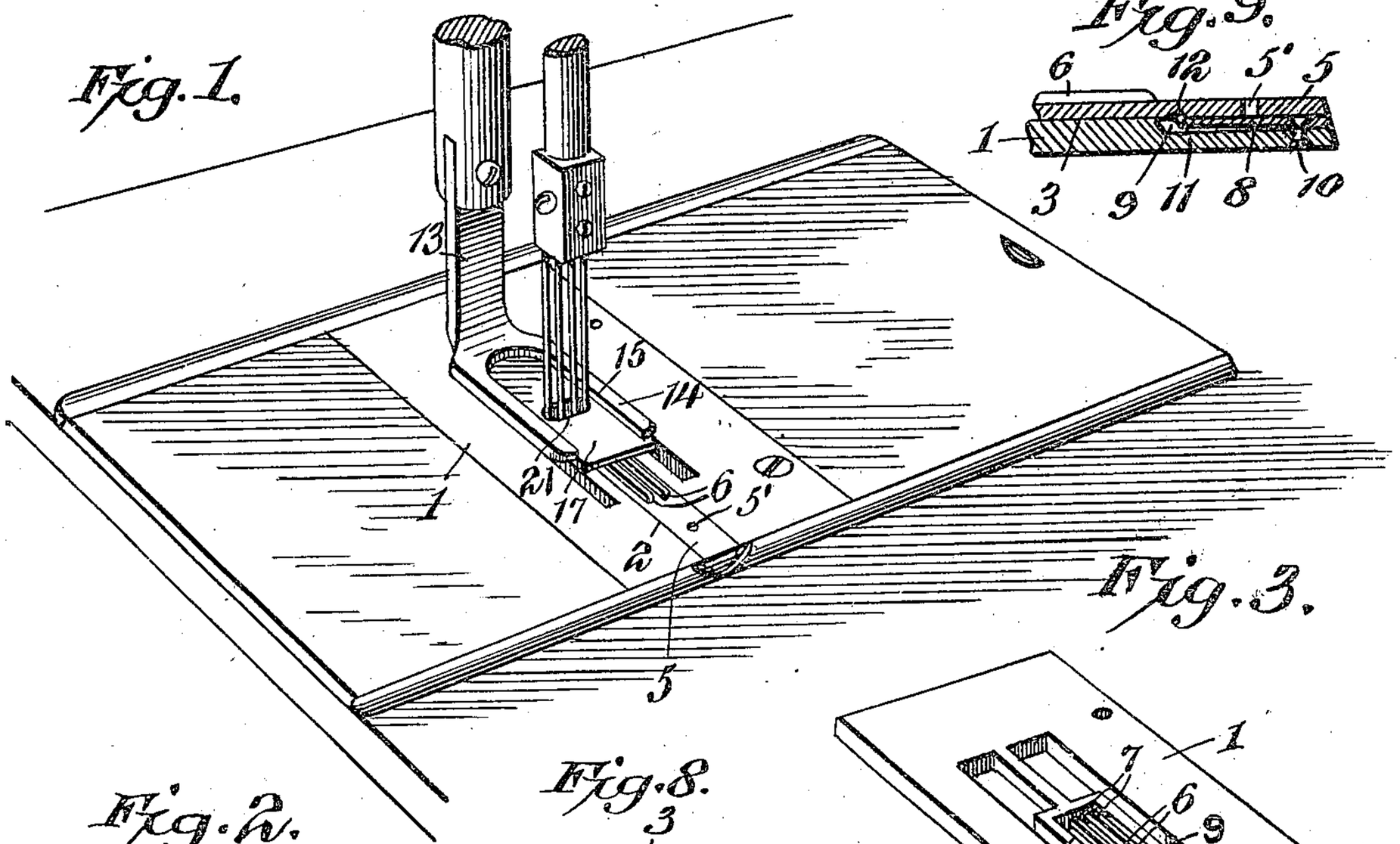

Fig. 9.

Fig. 3.

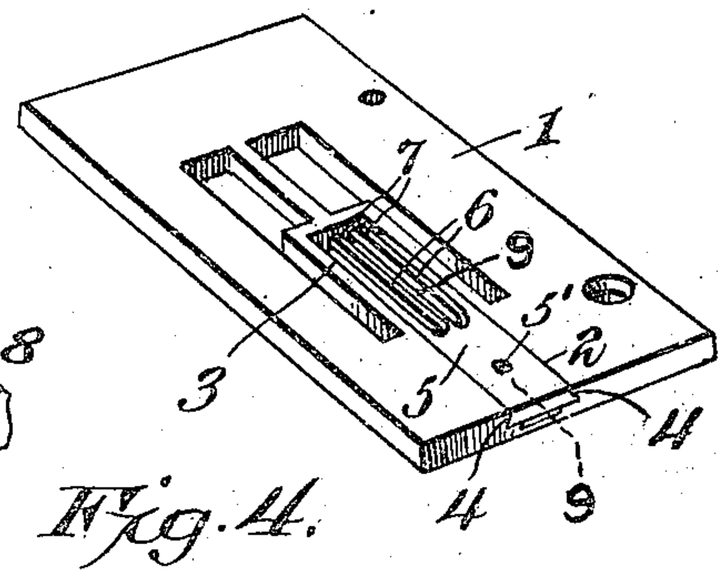

Fig. 2.

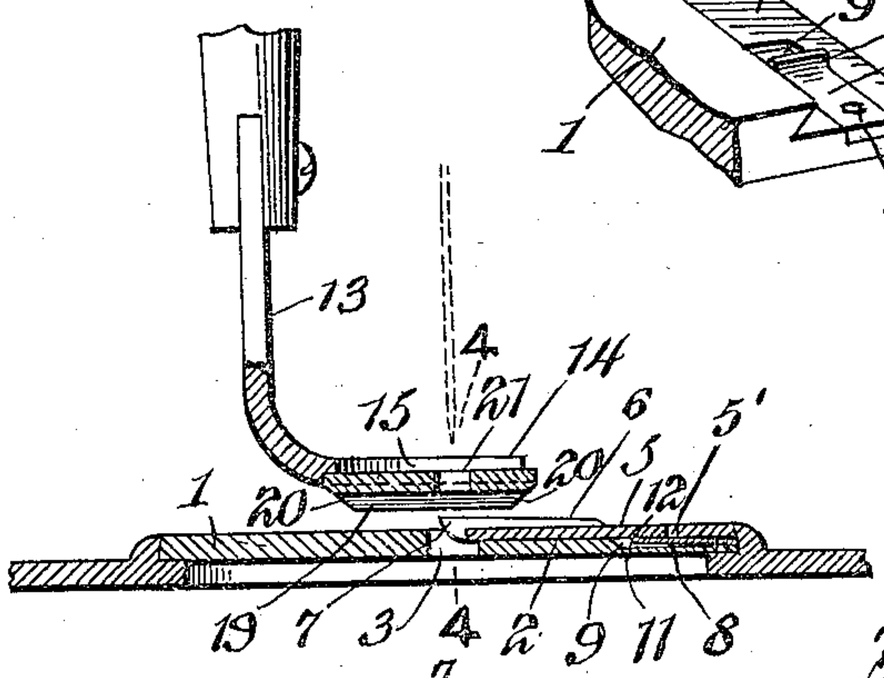

Fig. 8.

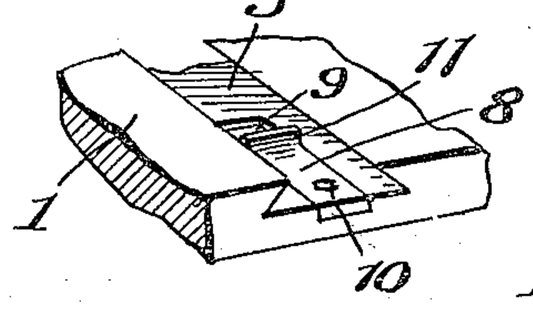

Fig. 4.

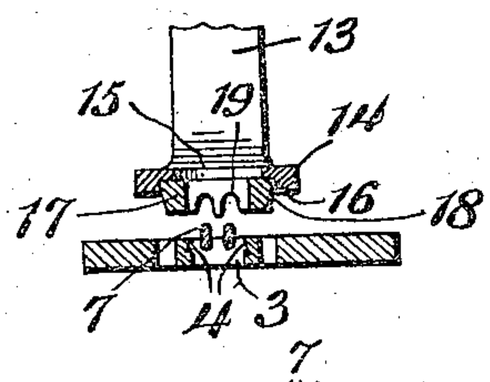

Fig. 5.

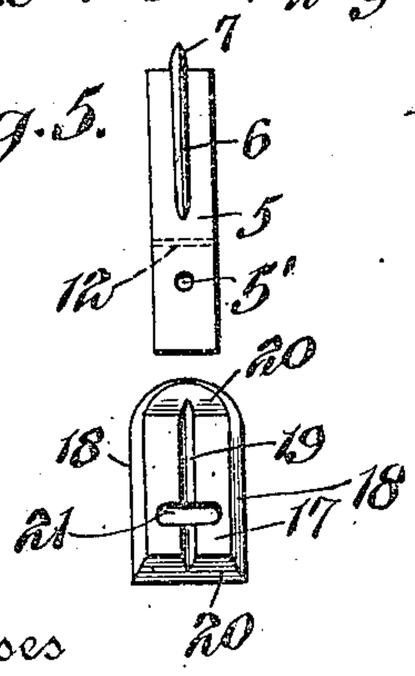

Fig. 6.

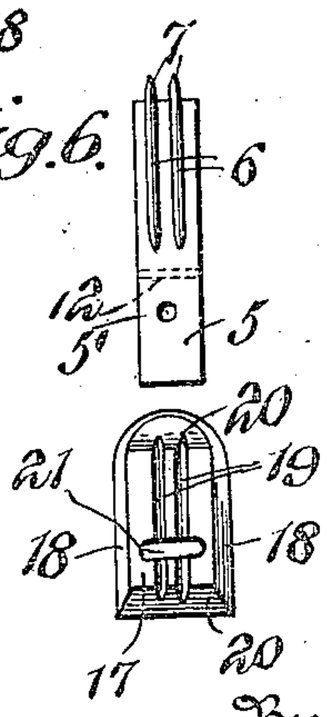

Fig. 7.

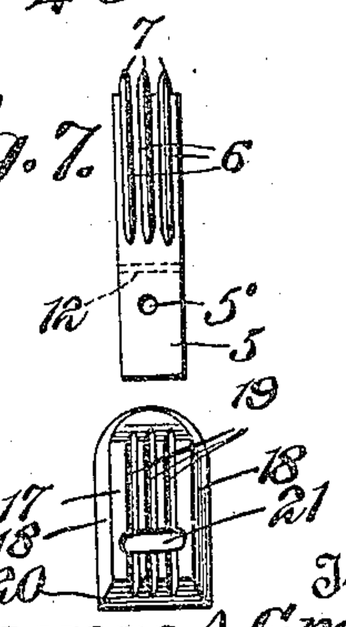

Witnesses

Howard D. Orr.

C. Bradway.

Inventor,

George A. Graydon,

By

C. G. Figgers

Attorney

ANDREW B. GRAHAM CO., PHOTO-LITHOGRAPHERS, WASHINGTON, D. C.

UNITED STATES PATENT OFFICE.

GEORGE A. GRAYDON, OF GLOVERSVILLE, NEW YORK, ASSIGNOR OF ONE-HALF TO FRANK E. BONFEY, OF GLOVERSVILLE, NEW YORK.

SEWING-MACHINE ATTACHMENT.

962,021. Specification of Letters Patent. **Patented June 21, 1910.**

Application filed November 12, 1909. Serial No. 527,727.

To all whom it may concern:

Be it known that I, GEORGE A. GRAYDON, a citizen of the United States, residing at Gloversville, in the county of Fulton and State of New York, have invented a new and useful Sewing-Machine Attachment, of which the following is a specification.

This invention relates to sewing machines and pertains more particularly to improvements in a throat plate and presser foot for a twin needle Wheeler and Wilson machine for silking the backs of leather and other gloves. In this class of machines now in use, in order to do single, double and triple draw or four-needle silking, it is necessary to use separate sets of throat plates and presser feet, necessitating the changing from one set to another whenever different kinds of work is to be done, and consequently taking considerable time and causing trouble to the operator.

One of the objects of the present invention is to overcome these objections by providing a throat plate and a presser foot with which interchangeable slides can be used for the various kinds of draw or silking, the slides being so designed that the presser foot and plate will always be in proper position without requiring great care and skill in properly positioning these parts, according to the old method of operation. Another advantage results from the fact that the ribs of the slides are formed integral therewith so as to overcome the difficulty experienced with the old form of throat plate and presser foot wherein the ribs were formed by wires soldered in place so that breaking of the ribs was a common fault.

A further object is the provision of an improved means for retaining the slide in the throat plate.

With these objects in view and others, as will appear as the description proceeds, the invention comprises the various novel features of construction and arrangement of parts which will be more fully described hereinafter and set forth with particularity in the claims appended hereto.

In the accompanying drawing, which illustrates one embodiment of the invention, Figure 1 is a perspective view of a portion of a machine showing the improved throat plate and presser foot. Fig. 2 is a vertical section through the throat plate and presser foot. Fig. 3 is a perspective view of the throat plate and with a two-draw slide therein. Fig. 4 is a vertical section on line 4—4, Fig. 2. Figs. 5, 6 and 7 are plan views of sets of single, double and triple draw slides. Fig. 8 is a fragmentary perspective view of the throat plate showing the slide-retaining spring. Fig. 9 is a detail sectional view on line 9—9, Fig. 3, for showing the locking engagement between the spring of the throat plate and slide.

Similar reference characters are employed for designating corresponding parts throughout the views.

Referring to the drawing, 1 designates the throat plate which is of usual construction except that it is provided with a channel 2 extending inwardly to the front edge of the throat opening 3, the channel being of dovetail cross section and having its opposite walls 4 undercut. Arranged in this channel is a slide 5 in the form of a rectangular plate which has beveled side edges for engaging the undercut side walls 4 of the channel. This plate is of such length as to terminate adjacent the opening 3 of the throat plate and has on its top surface, which is flush with the top surface of the throat plate, one, two or three longitudinally-extending ribs 6, as shown in Figs. 5, 6 and 7, which are to be used, respectively, for single, double or triple draw or four-needle silking. The ribs 6 project beyond the inner end of the plate as at 7 and extend across the opening 3, as clearly shown in Fig. 2, when the plate or slide is in position. The slide is releasably held in position by a spring 8 which is secured in a recess 9 in the bottom of the channel adjacent the outer end thereof, the outer end of the spring being fastened by a rivet 10 or equivalent means to the throat plate. The inner end of the spring terminates in an upwardly-projecting lip 11 which is adapted to engage in a transverse recess 12 in the under side of the slide 5, as clearly shown in Fig. 9. This spring readily yields to permit the slide to be withdrawn but engages the slide with sufficient tension to prevent displacement thereof. The slide has an aperture 5′ for permitting the insertion of a hook or other instrument for enabling the slide to be withdrawn from or inserted in the throat plate.

The presser foot 13 has its lower end formed into a horizontally-disposed plate

14 which has a longitudinal recess 15 projecting inwardly from its end, the side walls 16 of the recess being undercut from the bottom of the presser foot so as to form a dove-tail channel which receives the slide 17, the side edges 18 of the slide being beveled to fit in the channel. The bottom face of the slide is provided with one, two or three grooves 19, as shown in Figs. 5, 6 and 7, for receiving the ribs of the companion throat slide. The ends of the slide 17 is beveled at 20 for permitting the work to readily pass under the presser foot, and adjacent the outer end is a transverse opening 21 for accommodating the needles as they pass therethrough during the silking operation. The slide has a tight fit in the channel of the presser foot but can be readily withdrawn in a forward direction when the slide is to be changed. With slides of this character, it will be seen that the throat plate and presser foot are always in place so that the slides will perfectly aline when they are placed in their respective channels. The silking operation is carried on in the usual manner, as will be readily apparent to those skilled in this art.

From the foregoing description, taken in connection with the accompanying drawing, the advantages of the construction and of the method of operation will be readily apparent to those skilled in the art to which the invention appertains, and while I have described the principle of operation of the invention, together with the device which I now consider to be the best embodiment thereof, I desire to have it understood that the device shown is merely illustrative, and that such changes may be made when desired as are within the scope of the claims appended hereto.

Having thus described the invention, what I claim as new, and desire to secure by Letters Patent, is:—

1. The combination of a throat plate element having a needle opening and a channel in its top surface extending from one edge to the needle opening, a rib-carrying slide element disposed in the channel, and a device carried by one of the elements to automatically interlock with or disengage from the other element by movement of the slide element for releasably locking the latter in the channel.

2. The combination of a throat plate having a needle opening and a channel in its top surface extending from one edge to the needle opening, a rib-carrying slide disposed in the channel, there being a recess in one of the above-mentioned parts, and a spring secured to the other part and arranged to releasably engage in the recess to hold the slide in place.

3. A throat plate having an opening and a channel extending from one edge of the plate to the opening, said channel having undercut side walls, and a slide having beveled side edges for engaging the said walls and formed with a rib having one extremity projecting from the end of the slide and across the opening of the plate.

4. A throat plate having an opening and a channel extending from one edge of the plate to the opening, said channel having undercut side walls, a slide having beveled side edges for engaging the said walls and formed with a rib projecting from the end of the slide and across the opening of the plate, and retaining means in the channel for releasably engaging the slide.

5. A throat plate having an opening and a dove-tail channel in its top surface extending from one edge of the plate to the opening, a spring arranged in the channel with its outer end rigidly secured to the plate and its inner end formed into an upstanding lip, a slide removably positioned in the channel having means on its under side with which the said lip engages, and a rib on the top surface of the slide at the inner end thereof and having its inner extremity projecting across the opening of the throat plate.

6. A throat plate slide consisting of a plate having beveled side edges and formed with a longitudinally-extending rib on its top face, one extremity of the rib projecting beyond the end of the plate, a presser foot formed with a channel, and a slide fitted in the channel having a rib-receiving groove extending longitudinally of its under side.

7. The combination of a presser foot, a slide thereon having a needle opening and provided with a longitudinal groove intercepting the opening, a throat plate having an opening disposed in line with the opening of the said slide, and a slide on the throat plate having a longitudinal rib disposed in line with the groove of the first-mentioned slide, the inner extremity of the rib projecting beyond the slide and across the opening of the throat plate.

In testimony, that I claim the foregoing as my own, I have hereto affixed my signature in the presence of two witnesses.

GEORGE A. GRAYDON.

Witnesses:

DAVID H. DEMAREST,

BERTHA E. WETHERBEE.