E. N. HESCOCK.

TROLLEY.

APPLICATION FILED DEC. 29, 1909.

951,214.

Patented Mar. 8, 1910.

2 SHEETS—SHEET 1.

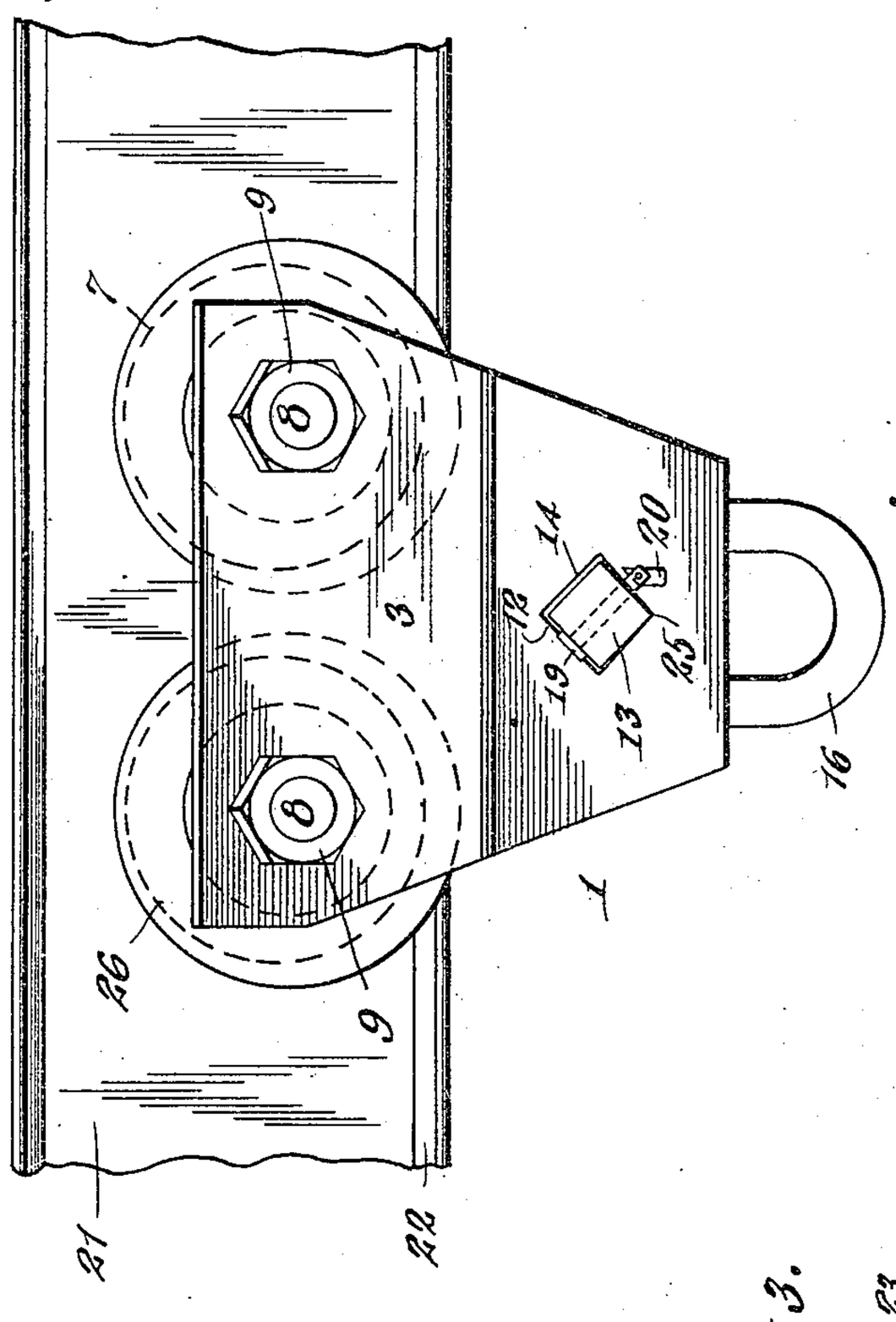

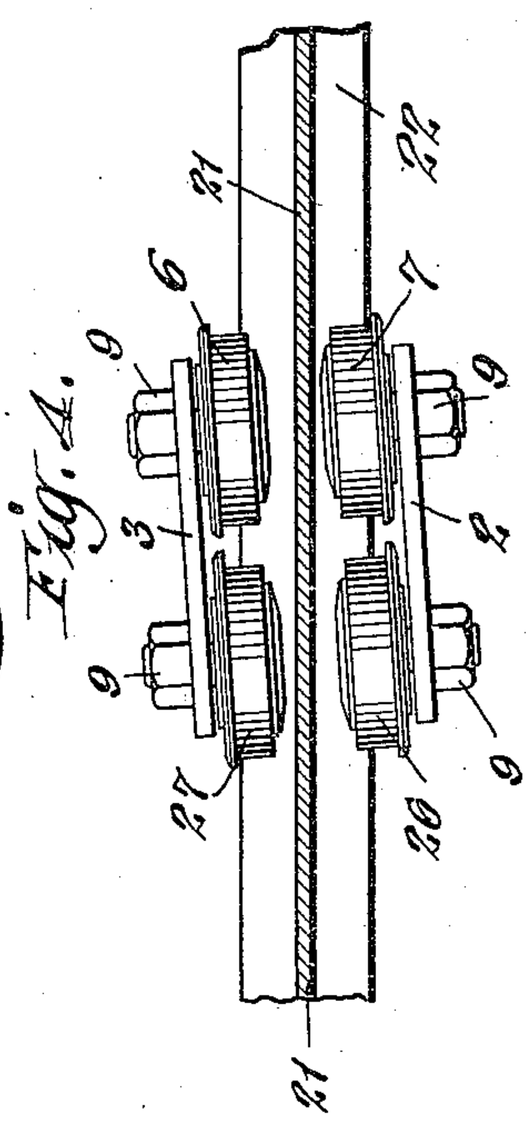

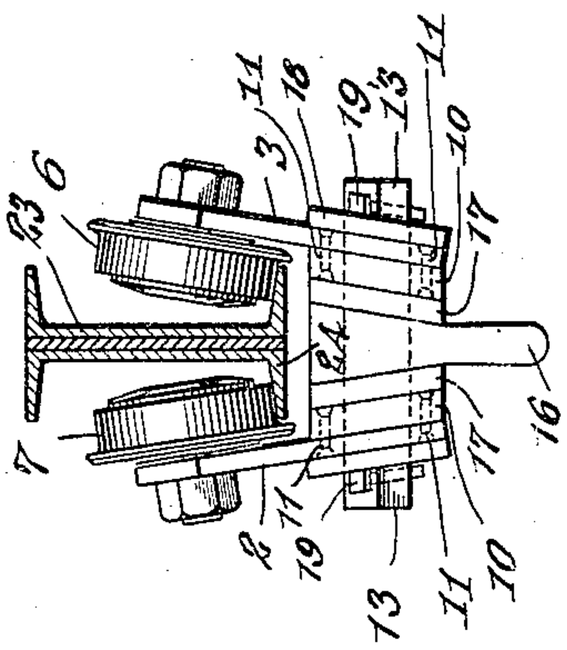

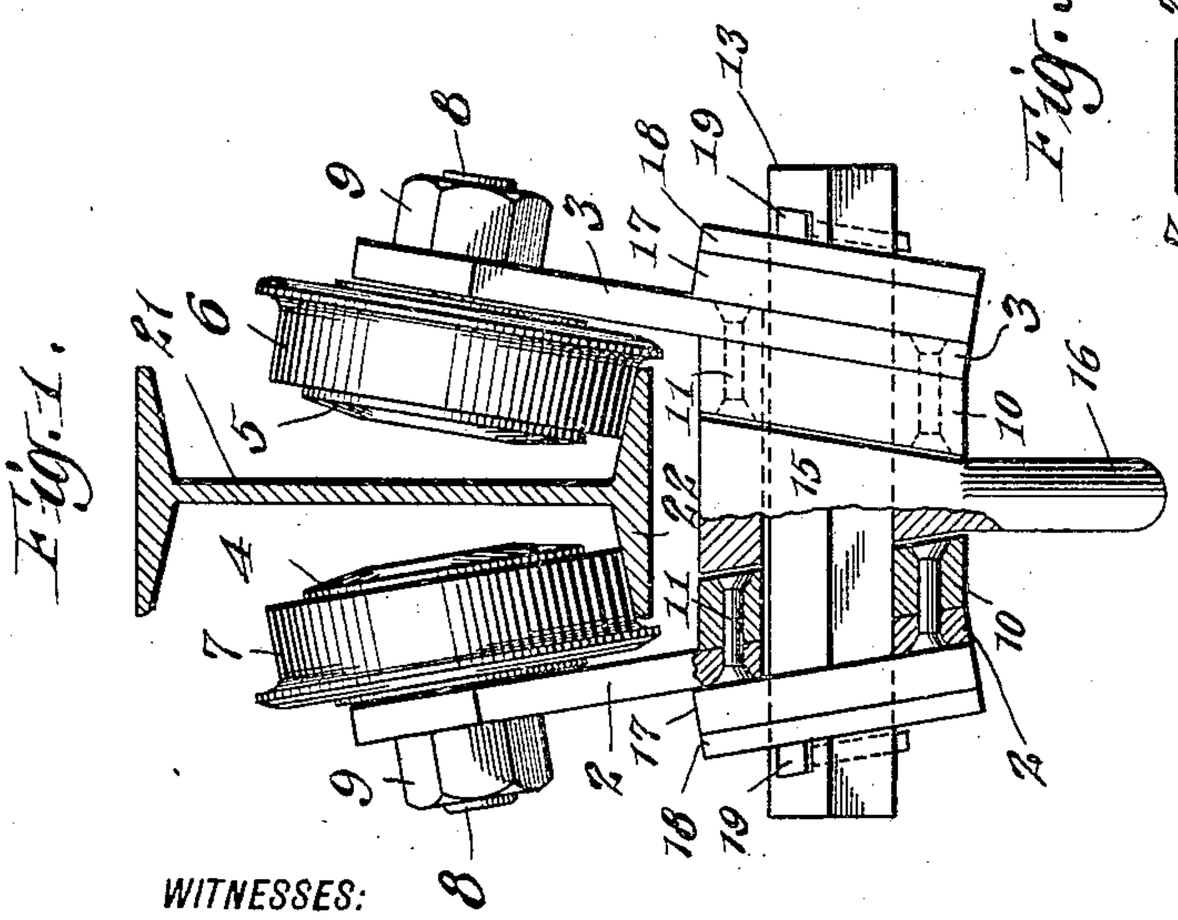

WITNESSES:

H. Leuchem

R. Menk

INVENTOR

Ethan N. Hescock

BY

Alan M. Johnson

ATTORNEY

ANDREW B. GRAHAM CO. PHOTO-LITHOGRAPHERS, WASHINGTON, D. C.

E. N. HESCOCK.

TROLLEY.

APPLICATION FILED DEC. 29, 1909.

951,214.

Patented Mar. 8, 1910.

2 SHEETS—SHEET 2.

Fig. 5.

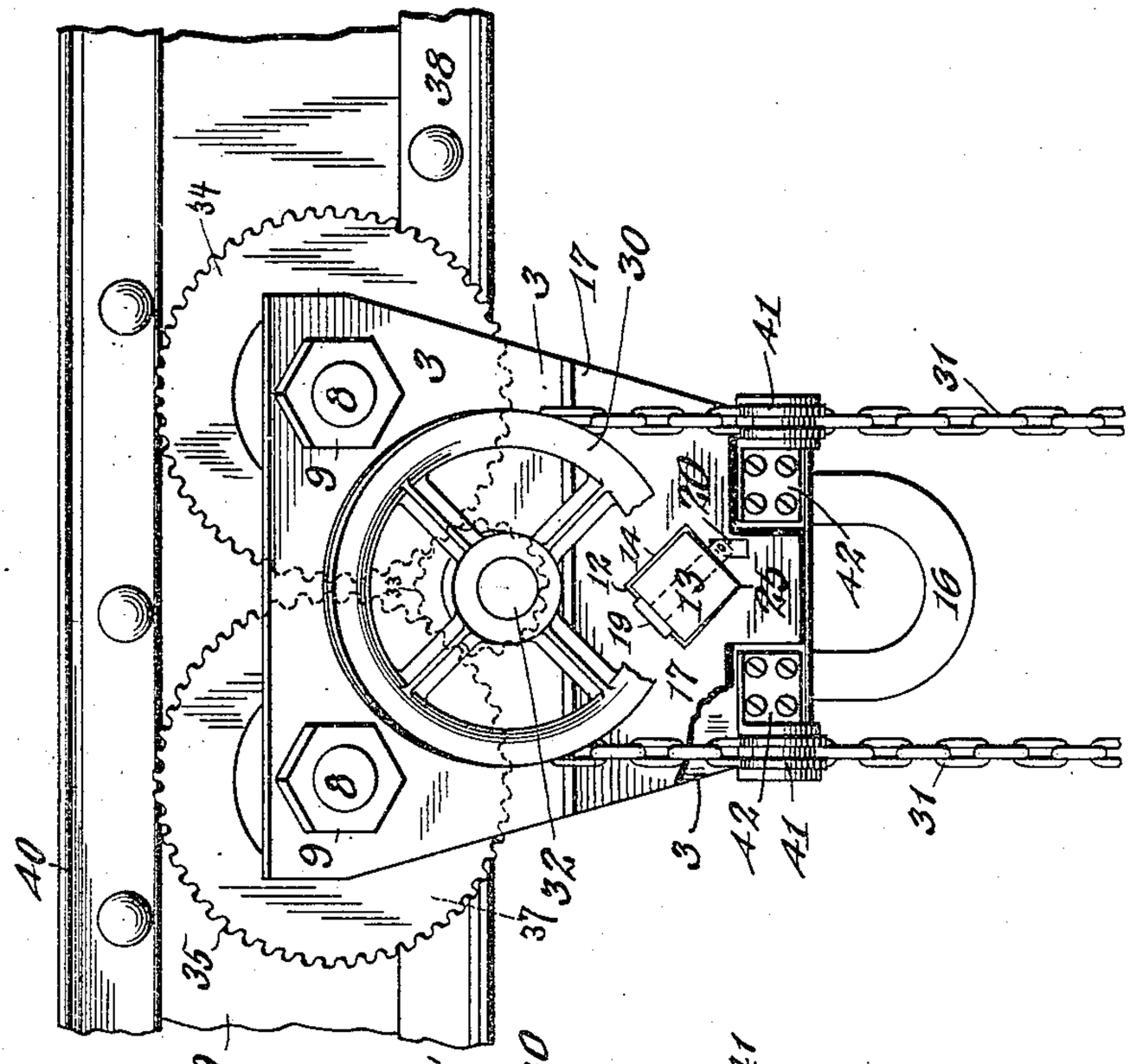

Fig. 6.

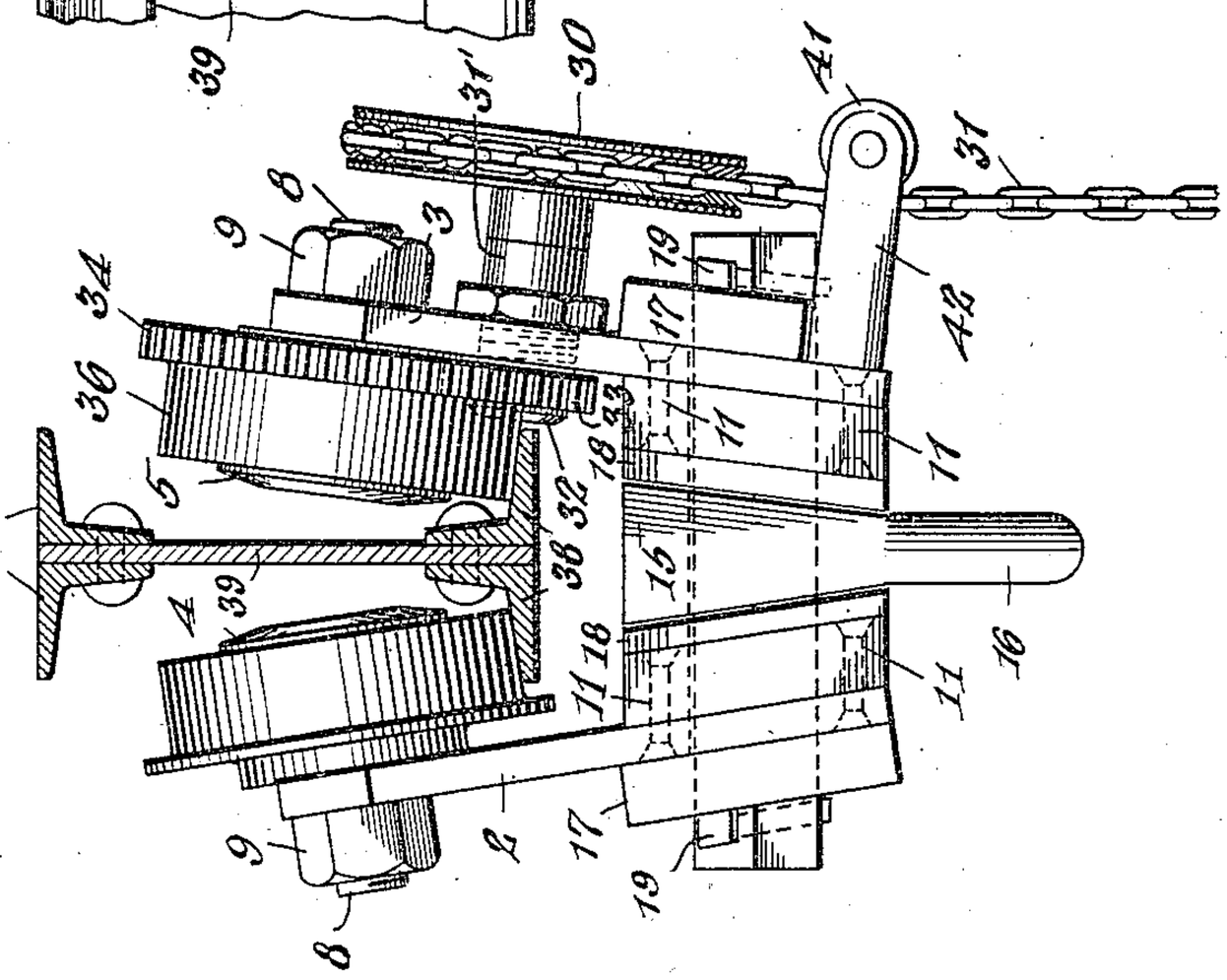

WITNESSES:

H. Crocheron

R. Menk

INVENTOR

Ethan N. Hescock

BY

Alan M. Johnson

ATTORNEY

ANDREW B. GRAHAM CO., PHOTO-LITHOGRAPHERS, WASHINGTON, D. C.

UNITED STATES PATENT OFFICE.

ETHAN N. HESCOCK, OF NEW YORK, N. Y.

TROLLEY.

951,214. Specification of Letters Patent. Patented Mar. 8, 1910.

Application filed December 29, 1909. Serial No. 535,506.

To all whom it may concern:

Be it known that I, ETHAN N. HESCOCK, a citizen of the United States, and a resident of the borough of Brooklyn, city and State of New York, have invented certain new and useful Improvements in Trolleys, of which the following is a specification, taken in connection with the accompanying drawing, which forms a part of the same.

This invention relates to plain or geared trolleys and more particularly to trolleys which can be adjusted to run upon different forms, weight and widths of track and to means for quickly adjusting the trolley, without the aid of skilled workmen or tools.

It further relates to a trolley in which the load is equally divided between the different wheels and which permits of ready and automatic adjustment to overcome irregularities in the track and also to compensate for the more or less irregular pulls upon the trolley at an angle to the track.

In the accompanying drawing showing illustrative embodiments of this invention and in which the same reference numerals refer to similar parts in the several figures,—Figure 1 is an end elevation of my trolley, parts being broken away for purposes of better illustration, the I-beam upon which it is supported being shown in section; Fig. 2 is a side elevation of the trolley; Fig. 3 is an end elevation on a smaller scale of my trolley, the parts being shown in a different adjusted position; the trolley being shown supported on a channel forming a track; Fig. 4 is a horizontal section through the I-beam showing a plan view of the trolley, the wheels being shown in a somewhat exaggerated position due to the center line of the trolley being temporarily at an angle to the track or beam, owing to the line of force not being for the moment parallel with the track; Fig. 5 is a side elevation of a geared trolley equipped with my invention; Fig. 6 is an end elevation of the trolley shown in Fig. 5, the track being in vertical section.

In the illustrative embodiments of this invention shown in the drawing, 1 is a trolley shown for purposes of illustration formed of two side plates 2 and 3, respectively, having in their upper ends headed studs 4 and 5 upon which rollers 6 and 7 are mounted; the ends 8, 8 of the studs being preferably screw threaded and passed through the plates 2 and 3, respectively, to coöperate with nuts 9, 9. The lower ends of these side plates 2 and 3 may be provided with integral enlargements but for the sake of economy in manufacture, I preferably secure these enlargements or cheeks 10, 10 to the plates 2 and 3 by means of rivets 11, 11. The side plates 2 and 3 and the cheeks 10, 10 are perforated or provided with openings 12, preferably non-circular, to coöperate with a non-circular pin 13. This pin 13 is formed preferably, though not necessarily, square in cross section and somewhat smaller than the openings 12, leaving a space 14 (Fig. 2) between the pin and the side plates 2 and 3, respectively, for a purpose hereinafter to be described.

On the pin 13 I mount a pendant 15 provided at its lower end with an eye 16 within which is hooked the block or other object to be supported directly or indirectly (not shown). Upon the pin 13 I mount a plurality of filler plates 17 and 18, four such plates being shown (Fig. 1) and preferably of different thicknesses. The side plates, pendant, pin and filler plates are all held together by any suitable means which can be readily removed for the purpose of adjusting the parts. I have shown for purposes of illustration locking means comprising toggle pins 19, 19 which pass through the pin 13 and are provided at their ends with a pivoted dog 20 which serves to prevent their unauthorized withdrawal.

In shops and factories and other locations where it is desired to use trolleys to transport articles or goods from one location to another it is often found in practice that the factory is equipped with tracks formed of I-beams 21 of a given weight and width of flange 22, or is provided with a track formed of channel irons 23 with a certain weight and width of flange 24 (Fig. 3) or other forms of track such as T rails or other forms. The width of these flanges 22 and 24 vary within considerable wide ranges, depending upon the weight per foot of the track, the heaviest track being installed to meet the heaviest loads to which it will be subjected. Frequently such a track 22 and 24, though it is to be understood of course that a T rail or any suitable track may be used, is of relatively great weight and width to carry trolleys adapted to transport the maximum loads for which the particular track has

been installed. On the identical track, however, it is often desirable to transport relatively light loads with a light trolley.

By my invention it is possible to use a ½—1—1½—2—3—or 4 ton trolley, or other capacity, upon tracks of a given weight and width of flange whether formed of channel irons, I-beams or otherwise, by simply adjusting the parts of the trolley to have it meet the particular and immediate requirements to which the trolley is to be put. For instance if it is desired to temporarily run the trolley 1 upon a comparatively narrow track or flange 22 of an I-beam 21, or other similar track all the filler plates 17 and 18, only four of which are shown for purposes of illustration though a greater or less number can be used if desired, are placed on the outside of the side plates 2 and 3 so as to bring the side plates comparatively close together to permit the wheels 6, 7, 26, and 27 to operate upon a comparatively narrow track or flange 22. This can be readily done by bringing the dog 20 into line with the pin 19 and withdrawing the pin and dog from the pin 13 and arranging the side plates and filler plates 17 and 18 as shown in Fig. 1.

In those instances where it may be desirable to use my trolley with an I-beam, channel iron, or other track, with the flange 24 having a greater width than that to which the trolley is for the moment adjusted to run, one or both of the pins 19 can be removed and one or more of the filler plates 17 and 18 can be placed upon the inside of the side plates 2 and 3, such as shown in Fig. 3, which is on a smaller scale, and in which the two filler plates 17, 17 have been placed upon the interior of the side plates 2 and 3, leaving the two other filler plates 18, 18 upon the exterior. This will, of course, throw the side plates 2 and 3 away from each other and with them the wheels 6, 7, 26 and 27, permitting the wheels to coöperate and run smoothly upon a wider track 24. Of course, it is to be understood that various adjustments of my trolley may be made; for instance only one filler plate 17 or 18 could be placed on the interior of the side plates 2 and 3, or all of the filler plates 17 and 18 could be placed on the interior of side plates 2 and 3, and that their number may be increased if desired, four being simply shown by way of example. This, it will be seen, will permit an extremely wide range of adjustment for my trolley which can be changed from one adjustment to the other by unskilled labor and without the aid of any tools.

By arranging the openings 12 in the side plates 2 and 3 substantially square and having the pin 13 also substantially square but somewhat smaller than necessary to snugly fit the openings 12, the load secured to the eye 16 and the pendant 15 is transmitted to the side plates 2 and 3 on a knife pivot 25, Fig. 2. This insures an equal distribution of the load between the two side plates and between the four wheels of the trolley. It also permits a slight relative movement between the different side plates 2 and 3 and the pin 13. This movement is advantageous to compensate for irregularities in the track and also to compensate for a line of force being applied to the trolley at an angle to the track.

In Fig. 4 I have shown the web of the I-beam 21 in section and the wheels of the trolley in plan and in a position on the flange 22 at an angle to the track, due to an improper application of force either assumed momentarily or for an extended period of time. In this Fig. 4 I have, for purposes of illustration, located the wheels at a somewhat exaggerated angle to the track. When the line of force pulling or operating the trolley is at an angle to the track, the tread of the four wheels which are the supporting points of the trolley will come at different levels on the track, it being understood that the track slopes from the web or center line to the extreme ends of the flanges 22 or 24, or other form of track, as the case may be. This brings the two wheels on one side plate 2 or 3 at different levels on the track. For example, if the line of force applied to the trolley is such as to cause the trolley to assume the position on the track shown in Fig. 4 the wheel 7 carried by the side plate 2 will move up the flange 22 of the I-beam while the corresponding wheel 26, carried by the same side plate 2, will move down the flange 22. On the other side of the web of the beam the position of the wheels will be reversed. The wheel 6 carried by the side plate 3 will assume a position near the edge of the flange 22 while the corresponding wheel 27 carried by the side plate 3 will move up the flange 22. If the side plates 2 and 3 are rigidly secured together, this position of the wheels on the track will tend to bind the trolley and prevent its free movement on the track.

By my invention and by the knife pivot 25 I permit of a limited play between the two side plates 2 and 3 and the square pin 13. This permits the two side plates 2 and 3 to have a limited opposite movement with relation to each other to compensate for this movement of the wheels toward and from the web of the track; it being understood that in the position shown for example in Fig. 4 the movement of the wheel 7 up the incline tread 22 of the track will in effect cause the side plate 2 to rock toward the rear while on the other side of the web the downward movement of the wheel 6 will cause the side plate 3 to rock forward upon the knife edge 25; the rocking movement being

limited by the opening 14 between the pin 13 and the openings 12, 12 in the side plates 2 and 3. The load will, therefore, always be equally distributed between the four wheels and the moment that the line of force again becomes parallel to the track the wheels of the trolley take their normal position upon the track.

I apply my invention also to trolleys which are positively driven along the track by means of gearing, the actuating member being either operated by hand or other power. In Figs. 5 and 6 I have illustrated my invention applied to a geared trolley, the driving member 30 being a wheel which is operated in any suitable manner such for instance as by means of a chain 31.

On one of the side plates 2 or 3 I secure, in any suitable manner a hollow bearing 31′ within which is mounted a stub shaft 32. On one end of this shaft 32 is firmly secured by brazing or in any other suitable manner, the wheel 30 while on the other end is secured the pinion 33 which meshes with the gears 34 and 35 secured respectively to the wheels 36 and 37, these wheels being carried, in the form shown, by the side plate 3 and travel upon the flanges 38 secured to the web 39 of the track, similar strengthening flanges 40 being preferably secured at the other end of the web 39. The wheels 36 and 37 are secured to the side plate 3 by means of the headed studs 4 and 5, screw threaded shanks and nuts 9 in the same manner that the wheels 6 and 7 are secured upon the trolley illustrated in Fig. 1.

The chain 31 is preferably, though not necessarily guided by means of rollers 41, 41 secured in brackets 42, 42 carried by the side plate 3.

It is obvious that if power is applied to the wheel 30 by means of the chain 31 or otherwise, it will rotate the pinion 33 which in turn will transmit the power to the gears 34 and 35 carried by the wheels 36 and 37 and will cause the trolley to move along the track 38. It is, of course, to be understood that the different forms of tracks shown in Fig. 6 and in the other figures of the drawing are merely illustrative.

Should it be desired to adjust the geared trolley to fit different sizes and weights of track it will be merely necessary to remove one or both of the toggle pins 19 and place one or more of the filler plates 17 and 18 on the interior or exterior of the side plates 2 and 3. This adjustment of course will not interfere with the pinion 33 gearing with the gears 34 and 35 for the gears and the pinion are positively mounted upon the same side plate 3 and consequently they will not be thrown out of gear. The knife edge 25 and the openings 12, 12 in the side plates 2 and 3 will permit the load on the geared trolley to be equally distributed on the side plates and to the wheels and will permit the limited rocking movement to overcome inequalities and irregularities in the track and compensate for any pull on the trolley which might be at an angle to the line of the track, all as previously described in connection with the plain trolley.

It will be readily seen that a jobber or dealer may merely carry the stock for several capacities of trolleys for example ½—1—1½—2—3— or 4 ton trolleys, or other capacities as may be desired, and without regard to any particular size or weight of I-beam, channel iron, T-rail or other form of track so that when he receives an order from a customer for a plain or geared trolley of a certain capacity and with a statement that it is to run upon an I-beam, channel iron, T-rail or other form of track of a certain weight which usually establishes the width of flange—or furnishes the width of flange, the dealer has merely to adjust the trolley for this size track. This enables him to reduce the amount of stock which he has to carry as it is not necessary to have trolleys of different capacities for tracks of different weight and different size flanges. By my invention it is merely essential for the dealer to have in stock the trolley of the required capacity when he can with unskilled labor and with a minimum amount of time himself adjust the trolley of the given capacity to any particular weight or width of I-beam, channel or other track upon which it is to operate. This also saves delay in filling the order as the customer has merely to furnish the weight per foot of his I-beam, channel iron, T-rail or other track which will enable the dealer to adjust the trolley for flanges of that particular weight track. It will therefore be seen that by my invention both the dealer and manufacturer are saved from the necessity of putting a great amount of capital in a large stock of trolleys of different capacities to fit different size tracks. The expense of manufacturing is also materially reduced by my invention for the manufacturer will have only to manufacture certain standard parts for certain standard capacity trolleys which, as previously noted, can be readily adjusted to the different forms of track, which adjustment can be made either by himself, his unskilled employee, or by his customer or agent.

Having thus described this invention in connection with several illustrative embodiments thereof to the details of which I do not desire to be limited, what is claimed as new and what it is desired to secure by Letters Patent is set forth in the appended claims:

1. In a trolley the combination of a plurality of side plates, traction means carried by the side plates, a member connecting the side plates, and one or more filler plates

mounted on the connecting member and adapted to adjust the side plates to and from each other.

2. In a trolley the combination of a plurality of side plates, traction means carried by the side plates, a member connecting the side plates, and one or more removable and adjustable filler plates of varying thicknesses mounted on the connecting member and adapted to adjust the side plates to and from each other.

3. In a trolley the combination of a plurality of side plates, cheeks secured to the side plates, traction means carried by the side plates, a pin connecting the side plates and one or more removable and adjustable filler plates adapted to adjust the side plates to and from each other.

4. In a trolley the combination of a plurality of side plates provided with non-circular openings, traction means carried by the side plates, a non-circular member fitting in the non-circular openings in the side plates and of smaller cross section than said openings, said side plates adapted to have relative movement with relation to said member, and means to support the weight from said non-circular member.

5. In a trolley the combination of side plates provided with substantially square openings, traction means carried by the side plates, a substantially square member fitting within the substantially square openings in the side plates and of smaller cross section than said opening, and means to support the weight from said member, the arrangement being such that the weight is supported on a knife edge pivot insuring equal distribution of the weight between the side plates and the traction means.

6. In a trolley the combination of a plurality of side plates provided with non-circular openings, traction means carried by the plates, a non-circular member fitting within the non-circular openings of the plates and of less cross section than said openings to permit a relative movement between the member and the side plates, and one or more filler plates adapted to permit the side plates to be adjusted with relation to each other.

7. The combination in a trolley of side plates, traction means carried by the side plates, means to adjust the side plates with relation to each other to permit the trolley to fit different size tracks, and means to permit the side plates to have a relative limited rotation with respect to each other.

8. The combination in a trolley of side plates provided with substantially square openings, traction means carried by the side plates, means to adjust the side plates to and from each other to fit different size tracks, and a substantially square member of less cross section than the substantially square openings in the side members, the same forming a knife pivot between the member and the side plates.

9. In a trolley the combination of two side plates carrying cheeks and provided with substantially square openings, a substantially square pin of less cross section than the openings in the side plates and cheeks to permit a relative limited rotation between the pin and side plates, one or more filler plates mounted on the pin and adapted to adjust the side plates to and from each other, and a pendant mounted on the pin between the side plates.

10. In a trolley the combination of a divided frame, wheels carried by the frame, gears carried by one or more of the wheels, means to drive the gear or gears, and removable means separate and distinct from the frame to adjust the different portions of the frame to and from each other.

11. In a trolley the combination of a plurality of side plates, traction wheels, one or more gear wheels carried by one or more traction wheels, a pinion meshing with said gear wheels, a driving member to actuate said pinion, a member connecting the side plates, and one or more adjustable and removable filler plates mounted on the member connecting the side plates and adapted to adjust the wheels of the trolley to fit different size and weights of track.

12. In a trolley the combination of a plurality of side plates provided with non-circular openings, wheels carried by the side plates, one or more gears carried by one or more of the wheels, a pinion adapted to mesh with the gear wheels, a non-circular member fitting in the non-circular openings in the side plate and of smaller cross section than said openings, permitting said side plates to have a relative limited movement with relation to said member, and means to support the weight from said non-circular member.

13. In a trolley the combination of a plurality of side plates provided with non-circular openings, wheels carried by the side plates, one or more gears carried by one or more of the wheels, a pinion adapted to mesh with the gear wheels, a non-circular member fitting in the non-circular openings in the side plate and of smaller cross section than said openings permitting said side plates to have a relative limited movement with relation to said member, means to support the weight from said non-circular member, and filler plates to adjust the side plates to and from each other.

ETHAN N. HESCOCK.

Witnesses:
ALAN M. JOHNSON,
ROSE MENK.