R. McF. DOBLE & A. ROSENTHAL.

DEFLECTOR HOOD CONTROL FOR TANGENTIAL WATER WHEELS.

APPLICATION FILED OCT. 4, 1905.

929,198. Patented July 27, 1909.

2 SHEETS—SHEET 1.

Fig. 1.

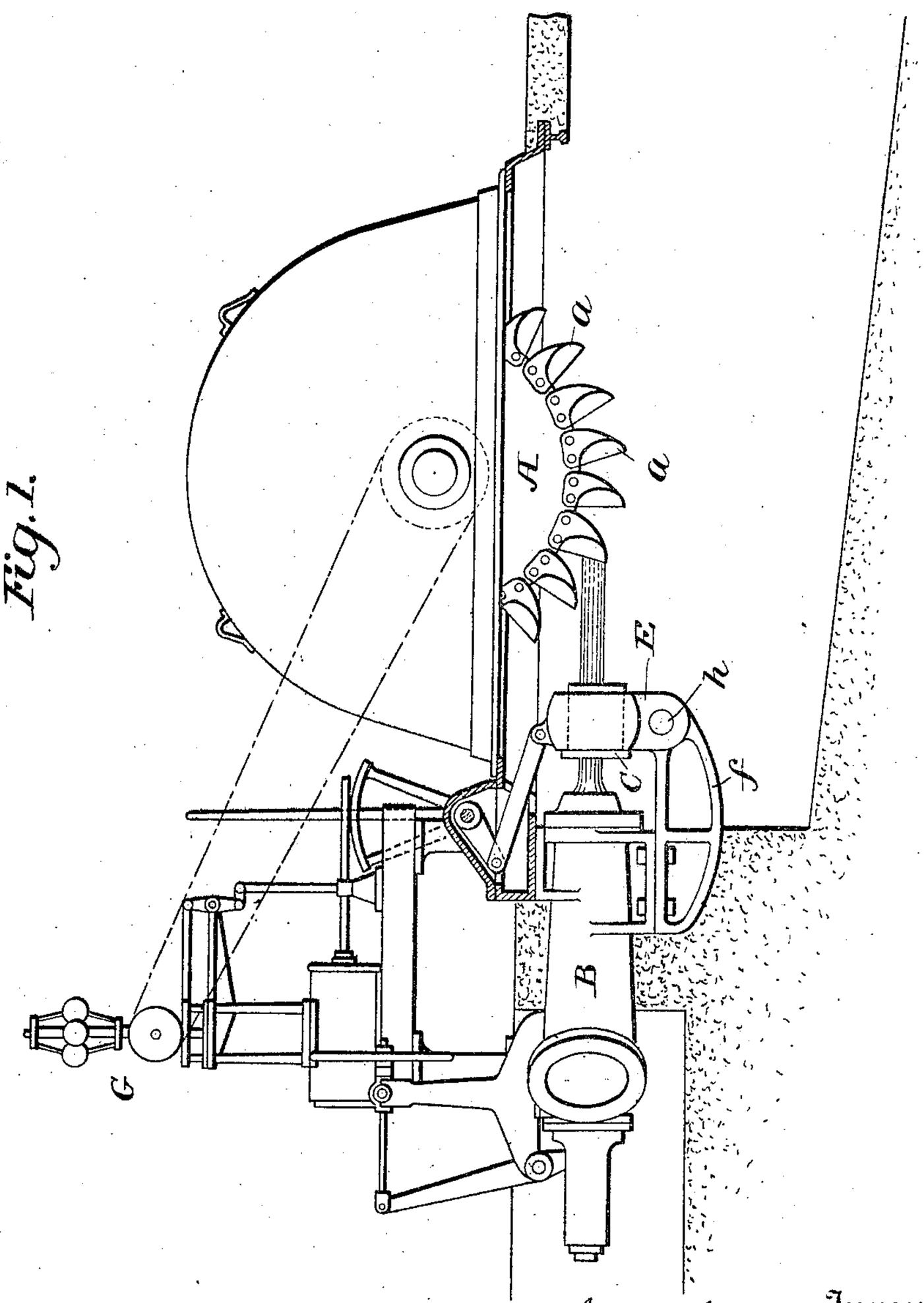

Witnesses

J. G. Stickel

B. C. Rust

Inventors

Robert McFarland Doble

Alfred Rosenthal

by Foster, Freeman & Watson,

Attorneys

R. McF. DOBLE & A. ROSENTHAL.

DEFLECTOR HOOD CONTROL FOR TANGENTIAL WATER WHEELS.

APPLICATION FILED OCT. 4, 1905.

929,198. Patented July 27, 1909.

2 SHEETS—SHEET 2.

Fig. 2.

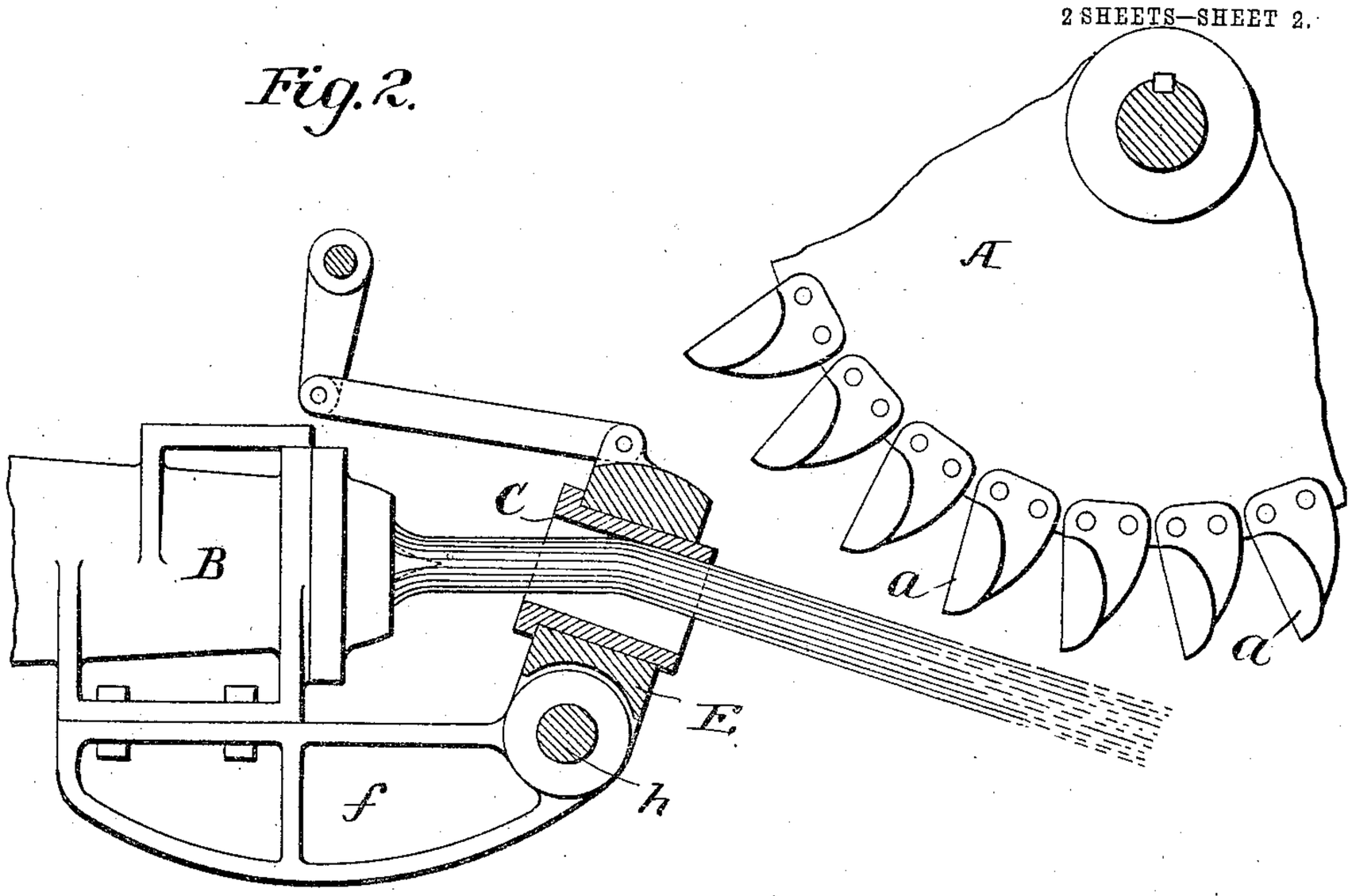

Fig. 3

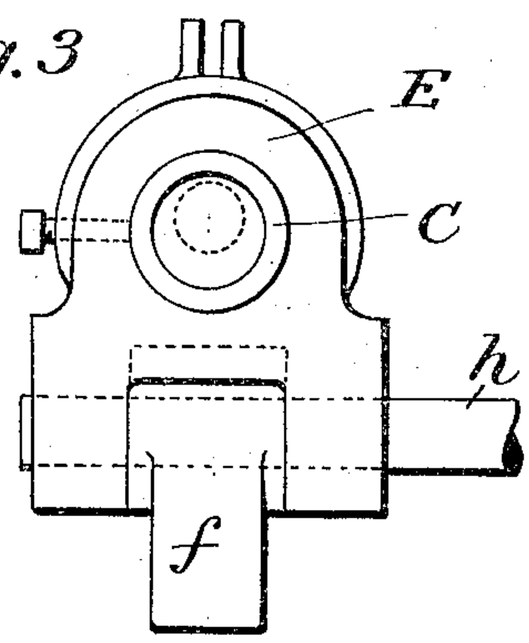

Fig. 5

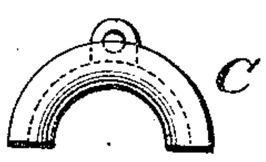

Fig. 4.

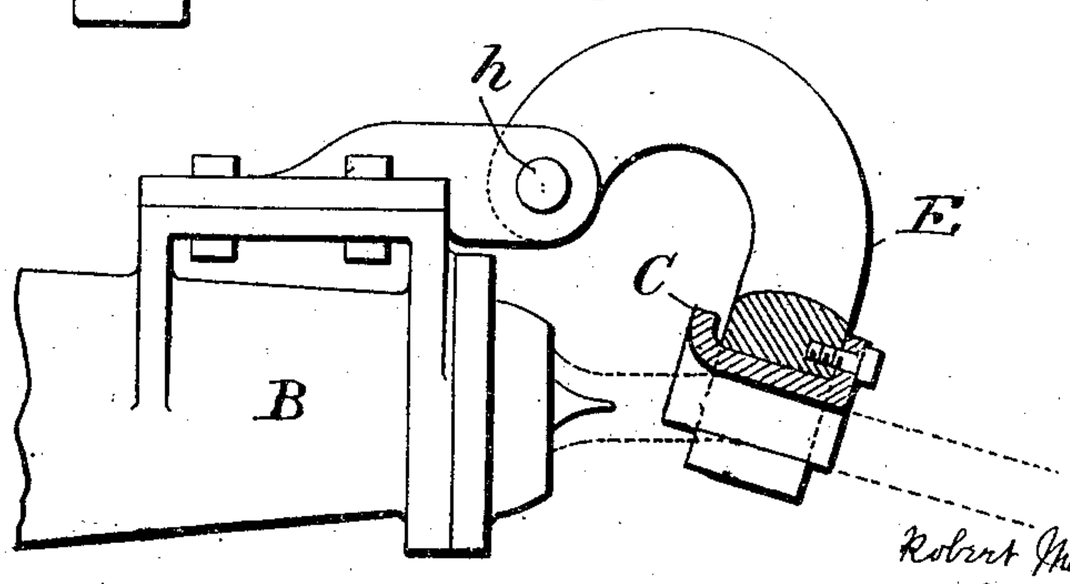

Witnesses:
J. G. Finkel
B. C. Rust

Inventors
Robert McFarland Doble
Alfred Rosenthal

by Fisher, Freeman & Watson,
Attorneys

UNITED STATES PATENT OFFICE.

ROBERT McFARLAND DOBLE AND ALFRED ROSENTHAL, OF SAN FRANCISCO, CALIFORNIA, ASSIGNORS TO ABNER DOBLE COMPANY, OF SAN FRANCISCO, CALIFORNIA.

DEFLECTOR-HOOD CONTROL FOR TANGENTIAL WATER-WHEELS.

No. 929,198. Specification of Letters Patent. Patented July 27, 1909.

Application filed October 4, 1905. Serial No. 281,310.

To all whom it may concern:

Be it known that we, ROBERT McFARLAND DOBLE and ALFRED ROSENTHAL, both citizens of the United States, and residing at San Francisco, in the county of San Francisco and State of California, have invented certain new and useful Improvements in Deflector-Hood Control for Tangential Water-Wheels, of which the following is a specification.

Our invention relates to that class of water motors in which a jet is thrown against the blades of an impact wheel, and our invention consists in the construction and arrangement of the deflector by means of which the jet is controlled to regulate the speed, as fully set forth hereinafter, and as shown in the accompanying drawing in which—

Figure 1 is an elevation, in part section, of sufficient of an impact motor to illustrate our invention; Fig. 2, part of the same, the parts in a different position; Fig. 3, an end view of the nozzle and deflector; Fig. 4, a sectional view showing a deflector in the form of a grooved block instead of a tube; Fig. 5, an end view of the deflector of Fig. 4.

The wheel A, its blades *a*, the nozzle B, and the governor G, may all be of usual or any suitable construction. The deflector C, instead of presenting a flat face as in some other constructions has a face curved or grooved transversely that is, corresponding as nearly as may be to the cross sectional form of the jet. As a result of this construction the said face instead of spreading or dispersing the jet has the effect of preserving to a greater degree the proper form thereof. It is important that the curved face of the deflector should correspond to a cylinder; that is, it should be of such a form as to present a straight line in longitudinal section as otherwise, instead of deflecting the stream, it would cause it to spread beyond the deflector to a fan shape, a result which would render it absolutely inoperative for practical purposes. While a block with a groove of proper form and size may be used, as the jet contacts with the deflector at only one half its circumference, it is preferable to form the deflector in the form of a hollow cylinder, or sleeve or tube, as this permits the tube to be turned in its support to present different parts of its face to the jet, and when one part is worn another can be brought into position and the tube can be thus utilized until worn away. A further and even greater advantage is that the deflector of cylindrical form can be made of special hard material, such for instance as manganese steel, capable of resisting corrosion to a great degree, and as such hard material can be machined practically only by grinding, the hollow cylindrical form lends itself to this mode of manufacture.

While the grooved or hollow deflector may be supported and adjusted in different ways it is preferably secured in a pivoted arm or support E, so as to occupy a position with its axis coinciding with that of the jet when the latter is not deflected, the deflecting face being carried into the jet at an angle to deflect the jet. As shown the deflector is carried into the jet from above, so that its edge verges from the nozzle and meets the jet, and therefore it has no tendency to fall away from the jet in case of lost motion, or to be drawn into the jet by the action of the latter.

As shown, the deflector fits a socket in the arm E and the latter is carried by a rock shaft *h* the arm or support E being operatively connected with the governor in any suitable manner so that on an increase of speed the deflector will be carried at an ngle into the jet. The rock shaft is shown as mounted in a bracket *f*, which is bolted to the nozzle.

We do not claim as our joint invention a deflector carried from above so that the edge farthest from the nozzle first meets the jet.

Without limiting ourselves to the construction shown, we claim:—

1. The combination with the wheel and its bucket of an impact water motor, of a nozzle and a deflector having a transversely curved deflecting face, and a support pivoted below the jet and adjustable to carry the deflector into and across the jet at an angle thereto, substantially as set forth.

2. The combination with the wheel and its bucket of an impact water motor, of a nozzle, and a deflector having a face curved to conform to a cylinder, and a support for the deflector supporting it movably in a position for the curved face to be brought from above the jet at an angle thereto to deflect the same downward.

3. The combination with the nozzle of an impact motor, of a movable deflector support and a deflector carried thereby and separable therefrom and having a cylindrical opening therein, substantially as set forth.

4. The combination with the nozzle of an impact motor, of a movable deflector support and a deflector carried thereby and having a circular orifice and rotatably adjustable in the support, substantially as set forth.

5. The combination with the wheel and its bucket of an impact water motor, of a nozzle, and a deflector having a face curved to conform to a cylinder, a support for the deflector supporting it movably in a position for the curved face to be brought from above the jet at an angle thereto to deflect the same downward, and a governor connected to swing the deflector to vary its angle to the jet according to the variations of the load.

6. The combination with the nozzle of an impact motor, of a bracket connected thereto, a deflector support pivoted to said bracket, and a deflector connected to said support and having a face forming a part of the cylinder, the parts arranged to permit the deflector to be carried from above into the jet at an angle thereto for the purpose set forth.

In testimony whereof we have signed our names to this specification in the presence of two subscribing witnesses.

ROBERT McFARLAND DOBLE.
ALFRED ROSENTHAL.

Witnesses to signature of Robert McFarland Doble:

P. ECHEGUREAU,
J. C. SOLORZANO.

Witnesses to signature of Alfred Rosenthal:

JULIUS COLEMAN,
H. L. SIMON.