No. 885,443. PATENTED APR. 21, 1908.

F. H. COTTRILL.

ALARM FOR PAPER FEED CARRIAGES.

APPLICATION FILED JAN. 25, 1906.

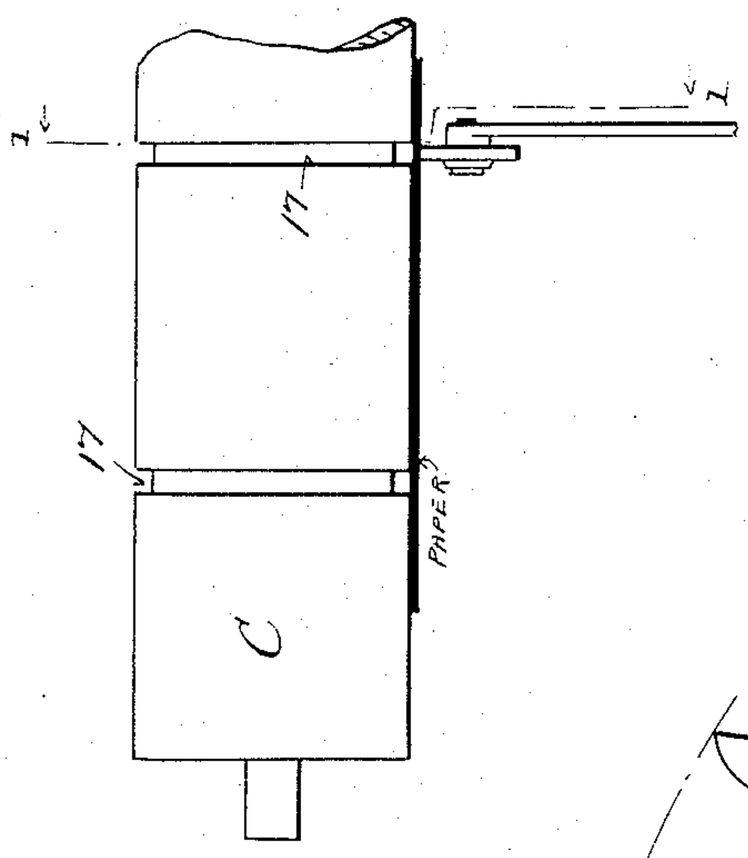

Fig. 2.

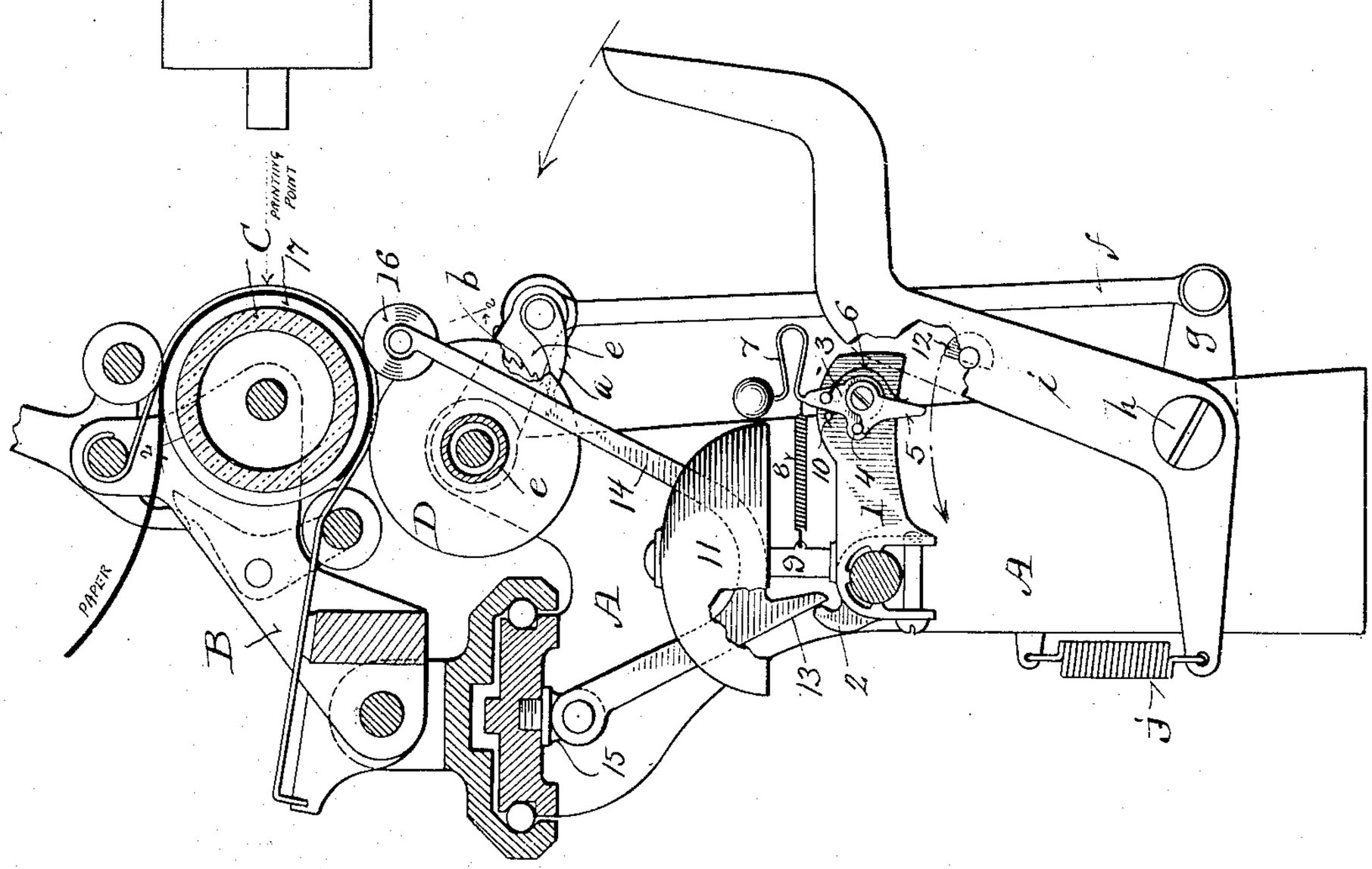

Fig. 1.

Witnesses:
Geo. W. Young.
Elsie R. Sullivan

Inventor:
Frank H. Cottrill
By Livingston A. Thompson
Attorney.

UNITED STATES PATENT OFFICE.

FRANK H. COTTRILL, OF MILWAUKEE, WISCONSIN.

ALARM FOR PAPER-FEED CARRIAGES.

No. 885,443. Specification of Letters Patent. Patented April 21, 1908.

Application filed January 25, 1906. Serial No. 297,882.

To all whom it may concern:

Be it known that I, FRANK H. COTTRILL, a citizen of the United States, and resident of Milwaukee, in the county of Milwaukee and State of Wisconsin, have invented certain new and useful Improvements in Alarms for Paper-Feed Carriages; and I do hereby declare that the following is a full, clear, and exact description thereof.

My invention pertains to paper carriage signals for adding machines and the like, its object being to provide a device which will, when the paper is about to run off the printing roller, give an alarm.

The invention consists in certain peculiarities of construction and combination of parts to be fully set forth hereinafter with reference to the accompanying drawings and subsequently claimed.

In the drawings: Figure 1 is a cross-section of an adding machine paper carriage with my alarm device attached thereto. Fig. 2 is a detail view of the printing roller and alarm-actuating finger, partly in section as indicated by line 2—2.

Referring by letters to the drawings; A is the carriage bracket having mounted thereon a longitudinally adjustable swinging carriage B which carries the printing roller C over which the paper is fed by the feed disks D. These disks are intermittently revolved by a pawl *a* and ratchet *b* mounted upon the shaft *c* and impart motion to the printing roller by frictional contact when the latter is in printing position. The pawl *a* is carried by an arm *e* loosely mounted on the shaft of the feed disks and is driven by a rod *f* connected to an arm *g* fast on a stud *h*. This stud has secured thereto the feed lever *i* which is moved in the direction of the arrow by the adding machine mechanism (not shown) each time a printing operation is made, and said lever is returned to its position of rest by a spring *j* secured to the carriage bracket A and the lever *i*.

Loosely mounted upon a shaft E of the carriage bracket is a dog 1 having a tail piece 2 and near its end is pivoted a lever 3 having a pin 4 for engagement with a trigger 5. The lever and trigger are mounted upon the same pivot with a spring 6 secured to the former resting upon the side of the trigger so as to hold the latter in contact with the pin 4 of lever 3 which also carries at its upper end a spring bell hammer 7. Another spring 8 is connected to the aforesaid lever and a post 9 projecting from the dog 1 and serves to hold the bell hammer in position by a stop-pin 10 projecting from said dog and against which the lever 3 rests. The post 9 has secured to its upper end a bell 11 against which the hammer 7 strikes when actuated by means of a lug 12 carried by the feed lever *i*.

The trigger 5 is normally held out of the path of the lug 12 by an extension 13 of a finger 14, which presses against the tail of dog 1. This finger is pivoted to an eye-bolt 15 fastened to the carriage bracket A and is curved upward, its free end carrying an anti-friction roller 16 which rests upon the paper when the latter is in position around the printing roller C and is held against the paper by the weight of the dog 1. The printing roller C is provided with annular or circumferential grooves or recesses 17 which are so arranged that one of said grooves will come directly over the anti-friction roller when said roller C is adjusted longitudinally for printing in various columns of figures.

In practice it frequently happens through inadvertence or otherwise, that an operator fails to detect that the paper has been entirely fed from the printing roller or that it has been fed too far to permit a total to be obtained of the column of figures. In the first instance the consequence may be that the operator will continue his list and print a portion of the same on the bare printing roller and be thus compelled to reprint an entirely new list. This would also be the case if the paper had been fed past the printing point before a total had been obtained.

My present device entirely overcomes the possibility of such accidents as the anti-friction roller is set a sufficient distance from the printing point so that when the paper passes a certain point on said roller, an alarm will be given in time for the operator to print one or more amounts before the paper is fed entirely off the roller.

The operation of the invention is as follows: The several parts being in the position shown in Fig. 1 of the drawings, with each printing operation the feed lever *i* is rocked forward, and as long as the paper is between the antifriction roller 16 and the printing roller C, it will hold the dog 1 in its present position, but as soon as the paper passes said anti-friction roller, the latter will drop in the groove 17 opposite it. This will cause the finger 14 to rise thereby permitting the dog to drop until the trigger 5 comes in the path

of the lug 12, and when the feed lever *i* is again moved forward, it will, through said lug, rock the bell hammer and cause the bell to be struck thus giving notice in advance that the operator must now make a total or shift the carriage. The bell thereafter will continue to ring with each operation of the adding machine until another sheet of paper is inserted around the printing roller which operation will lift the anti-friction roller out of its groove and again restore the several parts to their normal position.

Various modifications in the details of construction may be made without departing from the principle and intended scope of my invention.

Having thus described my invention, what I claim as new and desire to secure by Letters-Patent, is:

1. In a signal for paper-feeding devices for printing-machines, comprising an annular grooved printing-roller, an actuating-mechanism for the printing-roller, an operating-lever for the actuating-mechanism, and a pivoted finger adapted to engage the printing-roller grooves; the combination of a pivoted gravity-controlled dog arranged to oppose the finger and thereby tend to press said finger into a groove of said roller, a bell secured to the dog, and a spring-controlled pivoted bell-hammer for the bell carried by said dog, the hammer being adapted to engage the operating-lever of the aforesaid printing-roller actuating-mechanism when the said finger is forced into a groove of the roller.

2. In a signal device for the paper-feed mechanisms of printing-machines, comprising an annular grooved printing-roller and actuating-mechanism therefor, an operating-lever for the actuating-mechanism, and a pivoted finger adapted to engage any one of the printing-roller grooves; the combination of a pivoted gravity-controlled dog, a tail-piece projecting from the dog upon one side of its pivot, and arranged to oppose the finger, a bell carried by said dog, a bell-hammer pivoted to the aforesaid dog upon the opposite side of its pivot from that of the tail-piece, the bell-hammer being adapted to engage the operating-lever of the actuating-mechanism when said finger engages any one of the roller-grooves.

In testimony that I claim the foregoing I have hereunto set my hand at Milwaukee in the county of Milwaukee and State of Wisconsin in the presence of two witnesses.

FRANK H. COTTRILL

Witnesses:
GEORGE FELBER,
L. A. THOMPSON.