No. 865,389. PATENTED SEPT. 10, 1907.

E. HILL.

CONTROL OF ELECTRICALLY DRIVEN AIR COMPRESSORS.

APPLICATION FILED MAY 24, 1907.

2 SHEETS—SHEET 1.

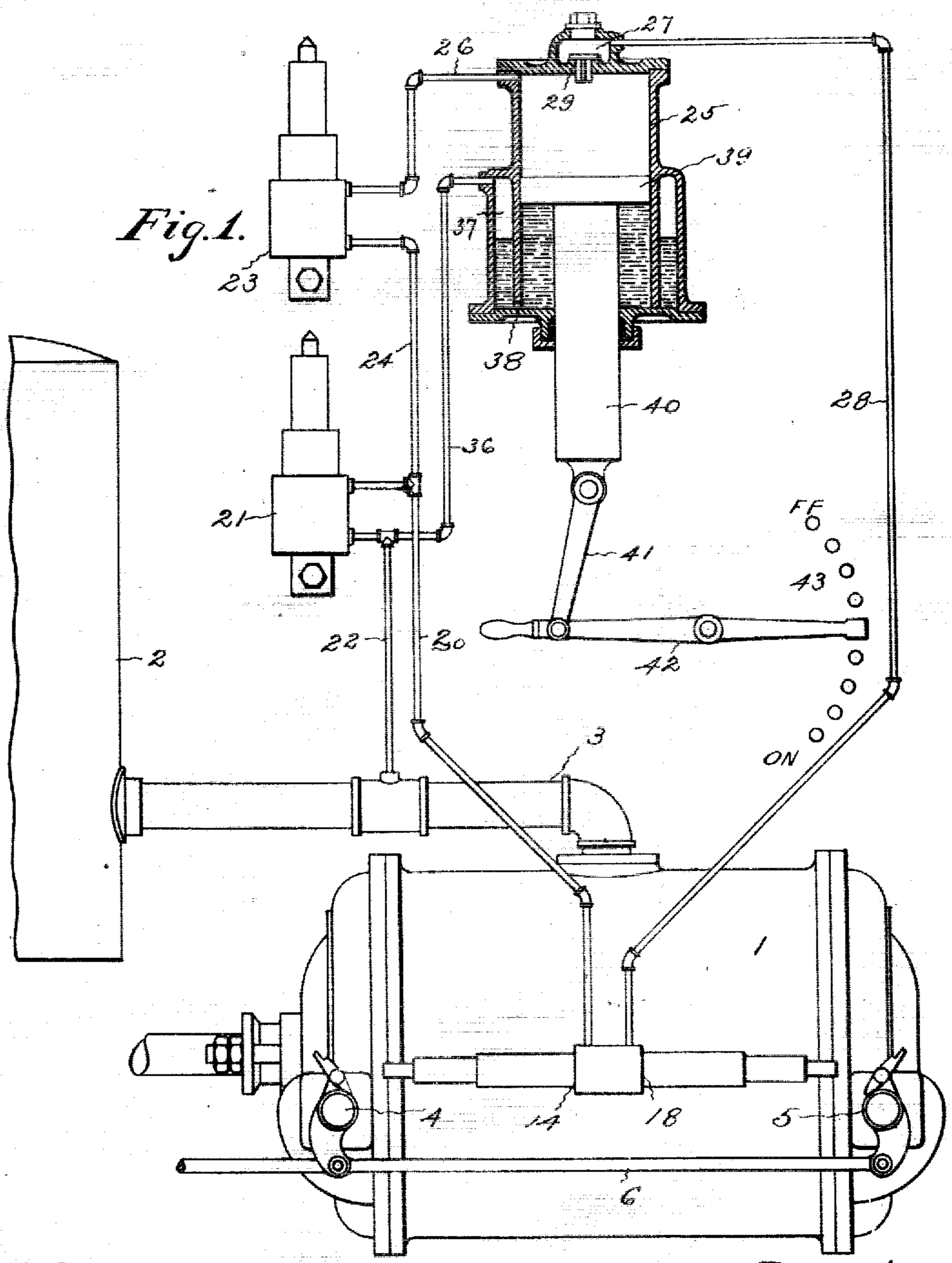

Witnesses.

Lena C. Berry.

Chas. B. Cracker.

Inventor.

Ebenezer Hill by

Harry P. Williams

atty.

No. 865,389. PATENTED SEPT. 10, 1907.

E. HILL.

CONTROL OF ELECTRICALLY DRIVEN AIR COMPRESSORS.

APPLICATION FILED MAY 24, 1907.

2 SHEETS—SHEET 2.

Fig. 2.

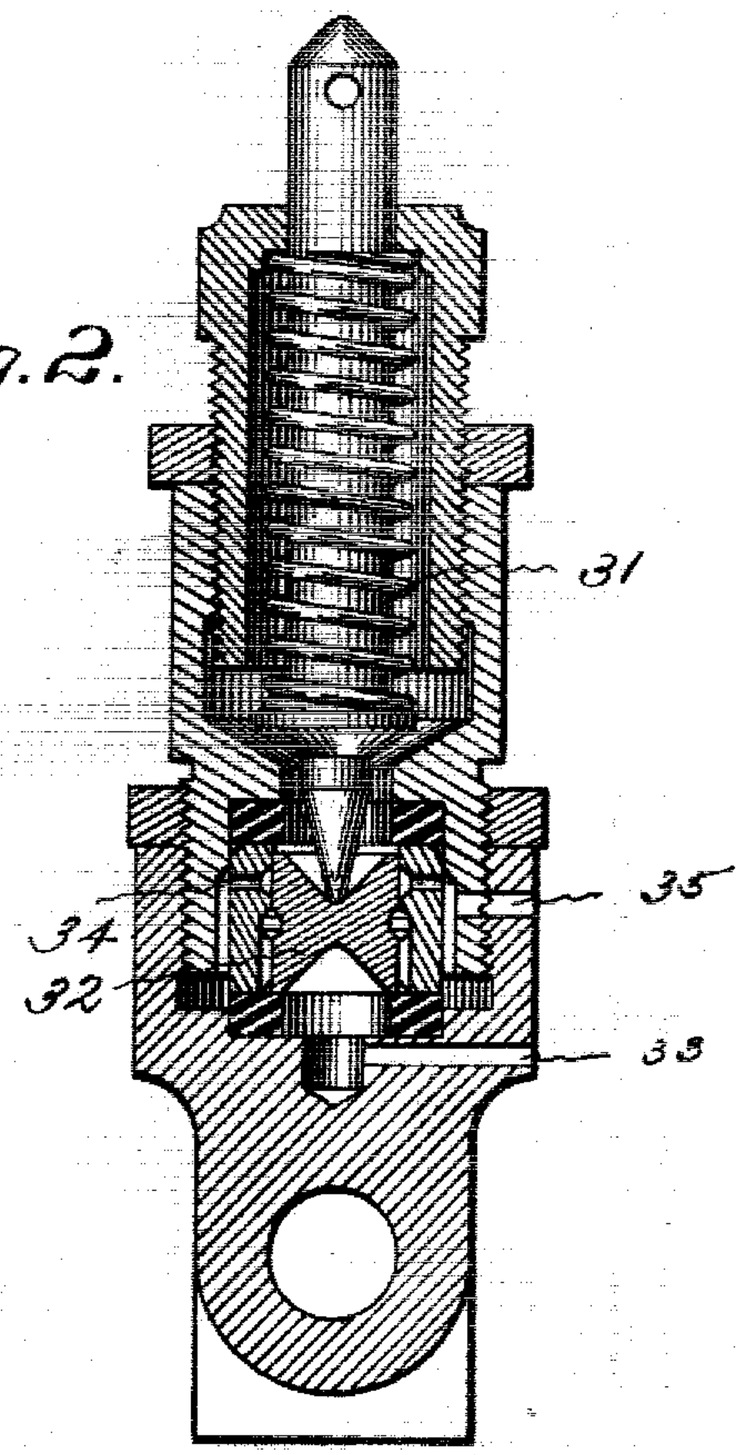

Fig. 3.

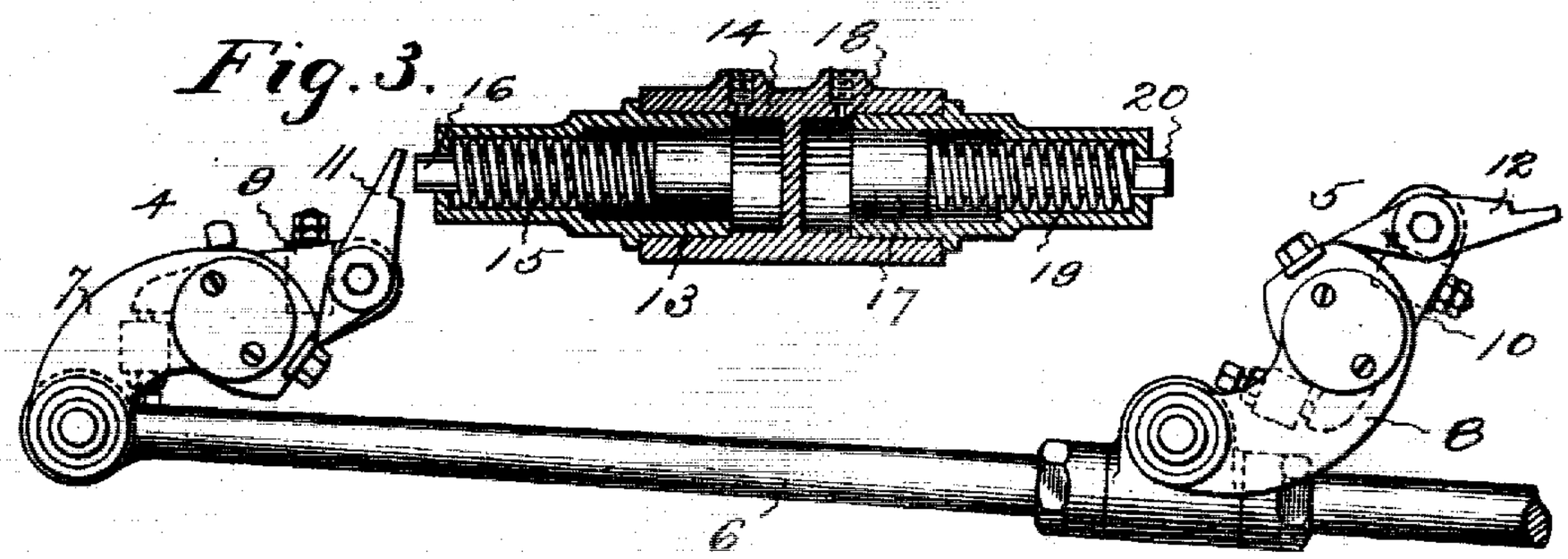

Witnesses.

Lena C. Berry.

Chas. B. Crocker.

Inventor.

Ebenezer Hill by

Harry P. William

Atty.

UNITED STATES PATENT OFFICE.

EBENEZER HILL, OF NORWALK, CONNECTICUT.

CONTROL OF ELECTRICALLY-DRIVEN AIR-COMPRESSOR.

No. 865,389. Specification of Letters Patent. Patented Sept. 10, 1907.

Application filed May 24, 1907. Serial No. 376,431.

To all whom it may concern:

Be it known that I, EBENEZER HILL, a citizen of the United States, residing at Norwalk, in the county of Fairfield and State of Connecticut, have invented a new and useful Control of Electrically-Driven Air-Compressors, of which the following is a specification.

This invention relates to an apparatus for automatically controlling the action of an air compressor that is driven by electrical means.

The object of the invention is to arrange an apparatus for an electrically-driven air compressor in such manner that the compressor will operate at full-load, half-load, no-load, stop, start, attain full speed, take half-load and full load, in the order recited or in reverse order from any point, as the demand for air upon the system which the compressor is designed to supply, may require. This object is accomplished by arranging two air controlling devices tandem, or in series, so that one does not operate until after the other, and connecting one with an apparatus for unloading one end of the compression cylinder and the other with an independent unloading apparatus for the other end of the compression cylinder, and arranging a mechanism for operating the motor circuit switch and an air check valve to operate in connection therewith, as more fully hereinafter described.

Figure 1 of the accompanying drawings shows a diagrammatic representation of the apparatus in connection with an air compression cylinder. Fig. 2 shows a sectional view of one of the air controlling devices. And Fig. 3 shows a sectional view of the unloading device and its relation to the intake valve operating mechanisms of the air compression cylinder.

The compression cylinder 1 is of ordinary construction and its piston is reciprocated in the usual manner by power furnished by an electric motor. Leading from the compression cylinder to an air receiver or reservoir 2 is the usual discharge pipe 3. The compression cylinder shown is provided with ordinary intake valve-operating mechanisms 4 and 5 of the so-called Corliss type which are actuated by a crank or eccentric rod 6 in the usual manner. (Fig. 1). The eccentric rod in this form of mechanism is connected with an arm 7 and an arm 8 which turn loosely on the intake valve stems. Fixed to the valve stems are arms 9 and 10 and carried by these arms are latches 11 and 12. These latches respectively connect the arms 7 and 9 and the arms 8 and 10 so that the reciprocation of the eccentric rod opens and closes the intake valves. (Fig. 3). This valve mechanism is fully described in Patent No. 844,802 issued to me February 19, 1907.

If the piston 13 in the valve unloading cylinder 14 is forced outwardly by air pressure, against the spring 15, so that its stem 16 engages the latch 11, that latch will disconnect the arms 7 and 9 and then the reciprocation of the eccentric rod will not open and close the valve to which the arm 9 is fastened, but will allow that valve to remain open. If the piston 17 in the unloading cylinder 18 is forced outwardly by air pressure, against the spring 19, the piston stem 20 will be in position to engage the latch 12 and cause it to disconnect the arms 8 and 10 so that the eccentric rod will not open and close the intake valve to which the arm 10 is fastened, but will allow that valve to remain open. (Fig. 3). This intake valve control mechanism is fully described in the patent above referred to, together with its action on the valve operating mechanism.

Leading from the discharge pipe of the compression cylinder to the inlet of the air control 21 is a pipe 22, and leading from the outlet of this air control to the inlet of an air control 23 is a pipe 24. From this latter air control to a dash-pot cylinder 25 is a pipe 26.

Leading from the chamber 27 on the top of the dash-pot cylinder to the cylinder of the unloading mechanism 18 is a pipe 28. A check valve 29 is arranged between the dash-pot cylinder and the chamber above so as to permit the free passage of air from the dash-pot cylinder to the chamber but normally prevent the passage of air from the chamber to the cylinder. A pipe 30 leads from the outlet pipe of the first air control to the cylinder of the unloading mechanism 14. The valve unloading cylinders 14 and 18 while shown in the same case have no connection between them.

The air controls illustrated are of the type shown and described in my above referred to Patent No. 844,802. In such a device when air in the receiver, or in the system to which the compressor is connected, reaches a predetermined limit and is sufficient to overcome the thrust of the spring 31 the valve 32 is lifted so that air from the inlet 33 will pass around the valve to the space 34 and to the outlet 35. (Fig. 2). The pressure then enters the pipe 30, which communicates with the valve unloading cylinder 14, and pushes out the plunger 13 so that its stem will engage the latch 11 and free the valve to which the arm 9 is attached allowing that valve to remain open. This relieves one end of the compression cylinder of work, that is, the valve remains open so that although the piston reciprocates air simply flows in and out through that valve and renders one-half of the air compression cylinder ineffective. If the pressure in the system drops the spring 31 closes the valve 32 and then the air in the cylinder 14 slowly leaks out through the valve casing and allows the piston 13 to be drawn in by the spring 15 so as to release the latch 11 and allow it to connect the arms 7 and 9 and cause the intake valve to resume its normal operation. If instead of falling, the pressure in the system continues to rise after the first air control has acted and has put one-half of the cylinder out of commission, the air pressure beside being exerted through the pipe 30 and in the valve un-

loading cylinder 14, is exerted through the pipe 24 that is connected with the inlet of the second air control, which, when the pressure reaches a degree sufficient to overcome the spring, operates and allows the pressure to be exerted through the pipe 26 past the valve 29 and through the pipe 28 to the valve unloading cylinder 18, so as to thrust the piston 17 outwardly and cause its stem 20 to engage the latch 12 and disconnect the arms 8 and 10. This action puts the compression cylinder entirely out of commission, that is, after the second air control has acted both intake valves are held open, so that although the compression piston continues to reciprocate no air will be compressed. As the pressure drops, the second air control operates to relieve the unloading cylinder 18 and allow the piston 17 to be drawn in by its spring 19 and the latch 12 to again connect the arms 8 and 10, so that the valve to which the arm 10 is fastened will resume its normal operation. A further drop of pressure causes the first air control to act and allow the valve at the other end of the cylinder to resume its operation. Thus by these mechanisms the compression cylinder is unloaded one-half when the air pressure rises to a predetermined degree, and if the rise continues the other half of the cylinder is unloaded, or rendered ineffective, and the reverse action takes place as the pressure drops.

A pipe 36 is connected with the system so as to conduct the pressure in the compression cylinder discharge pipe, to the chamber 37 that communicates by the small passage 38 with the chamber in the cylinder 25 below the plunger 39. This chamber and the part of the cylinder below the plunger, preferably contains a liquid. The large plunger stem 40 is connected by a link 41 with a switch lever 42 that is adapted to pass over the rheostat contacts 43 that are connected with the circuit which runs to the motor provided for driving the compressor.

When the pressure in the system supplied with air by the compressor reaches the predetermined degree—say 100 pounds per square inch—the first air control lets the pressure through and unloads one side of the compressor, and also admits the pressure to the second air control. This is so set that if the pressure rises still more—say to 102 pounds—then air at that pressure is admitted through the pipes to the second unloader and the compressor is entirely unloaded. The pressure from the second unloader acting on the plunger in the switch control depresses it and shuts off the electric current. It will be noted that the switch control has a differential plunger, that is, the plunger has a greater area above, subjected to the pressure that comes through the second control, than below, which is subject to the pressure in the compressor discharge pipe. If the pressure falls below 102 pounds—in the example taken—the second air control will empty all the pressure above the plunger and by reason of the pressure on the annular area below, the plunger will rise and in so doing turn on the electric current. The check valve 29 allows the air to pass to the second unloader but does not allow its return until the plunger rises its full limit and comes in contact with the stem and opens the check valve and thus relieves the second unloader and puts that end of the compressor cylinder in action. By this time however the electricity is all on and the motor is running at full speed. If the pressure continues to fall, say to 100 pounds, then the first air control closes and empties the air from the second air control and from the first unloader and fully loads the compressor.

As the lower portion of the switch control plunger is surrounded by a liquid and the air pressure is applied to the surface of this liquid, which is required to pass through a small aperture, the movement of the plunger and consequently of the switch is quite slow, thus giving the motor time to "build up" as the switch moves from point to point. Other means, such as a weight or spring, could be utilized to lift the switch plunger without departing from the invention.

By means of this apparatus when the air pressure is so high that no more is needed, the compressor is unloaded and the current is shut off so as to stop the motor, but a drop of air pressure first starts the motor in operation and then after the motor has attained full speed, opens first one end of the cylinder, and then the other end according to the demand for air.

While the embodiment of the invention of this application is shown and described in connection with an electrically-driven air compressor the invention in all its features is not limited to an electrically driven compressor, for instance, the use of a plural number of air controls for regulating in sequence the effective operations of the compressor, one control taking air from a supply of predetermined pressure and the following air control taking air from the preceding, that is, the employment of air controls arranged in series, is applicable to compressors which are driven by other means than electricity, such as steam, as is fully shown, described and claimed in my co-pending application No. 375,432 filed at the same time as the present application.

The invention claimed is:—

1. The combination with the compression cylinder of an air compressor and the valves thereof, of independently operating means for rendering the valves ineffective, an air control connected with the system and one valve control for operating that valve control when the pressure reaches a predetermined height, and an air control connected with the former air control and with another valve control for operating the latter valve control when the pressure reaches a higher degree than that required to operate the first air control, substantially as specified.

2. The combination with the compression cylinder of an air compressor and the valves thereof, of independently operating means for rendering the valves ineffective, and air controls connected in series so that one will not work until after the other, said air controls being connected with each other and one being connected with the discharge from the compression cylinder and one valve control, and the other air control being connected with the other valve control, substantially as specified.

3. The combination with the compression cylinder of an air compressor and the valves thereof, of independently operating means for rendering the valves ineffective, air controls connected with the discharge from the compressor and with each other, and also connected with the valve controlling means, an electric motor switch, and means operated by the air pressure admitted by the air controls for actuating the switch, substantially as specified.

4. The combination with the compression cylinder of an air compressor and the valves thereof, of independently operating means for rendering the valves ineffective, air controls connected with each other and with the discharge from the compressor and with the valve unloading mechanisms, an electric motor switch, means for operating the switch, and connections between the switch operating means and the air controls whereby the switch is operated by the variation of pressure in the discharge pipe from the compression cylinder and the discharge pipe from the second air control, substantially as specified.

5. The combination with the compression cylinder of an air compressor and the valves thereof, of means for rendering the valves ineffective, an air control connected with the discharge from the compression cylinder, and also connected to and operating said valve controlling means, an electric motor switch, means for operating the motor switch, connections between the switch operating means and the air control for operating said means, and liquid in the switch operating means for causing said means to move slowly, substantially as specified.

6. The combination with the compression cylinder of an air compressor and the valves thereof, of means for rendering the valves ineffective, an air control connected with said means and with the system for operating said means, an electric motor switch, means for operating the motor switch, connections between the switch operating means and the air control whereby said means is actuated for operating the switch by variations of pressure in the system, and a check valve arranged to hold the air pressure on the valve controlling means until the switch operating means has moved sufficiently to turn the full current on the motor, substantially as specified.

7. The combination with a compressor and the valves thereof, of a plural number of air controls for regulating in sequence the effective operations of the compressor, one control taking air from a supply of predetermined pressure, and the following air control taking air from the preceding, substantially as specified.

EBENEZER HILL.

Witnesses:
E. HILL, Jr.,
H. H. MOSSMAN.