No. 855,152. PATENTED MAY 28, 1907.

S. G. WILSON.

BROOM HANDLE.

APPLICATION FILED JULY 1, 1905.

Fig. 2.

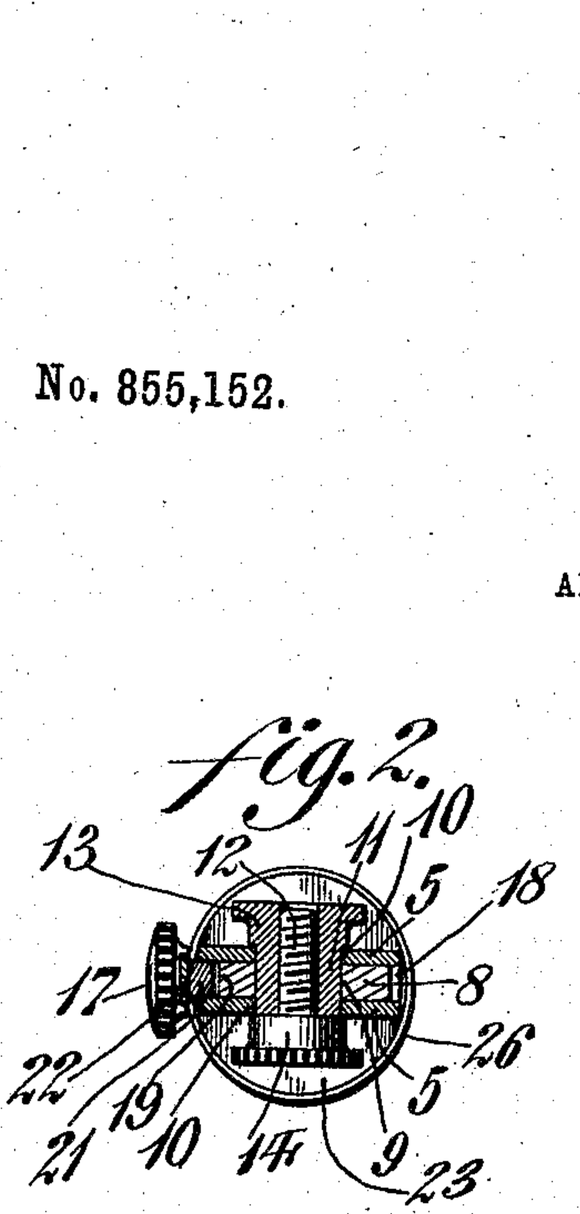

Fig. 1.

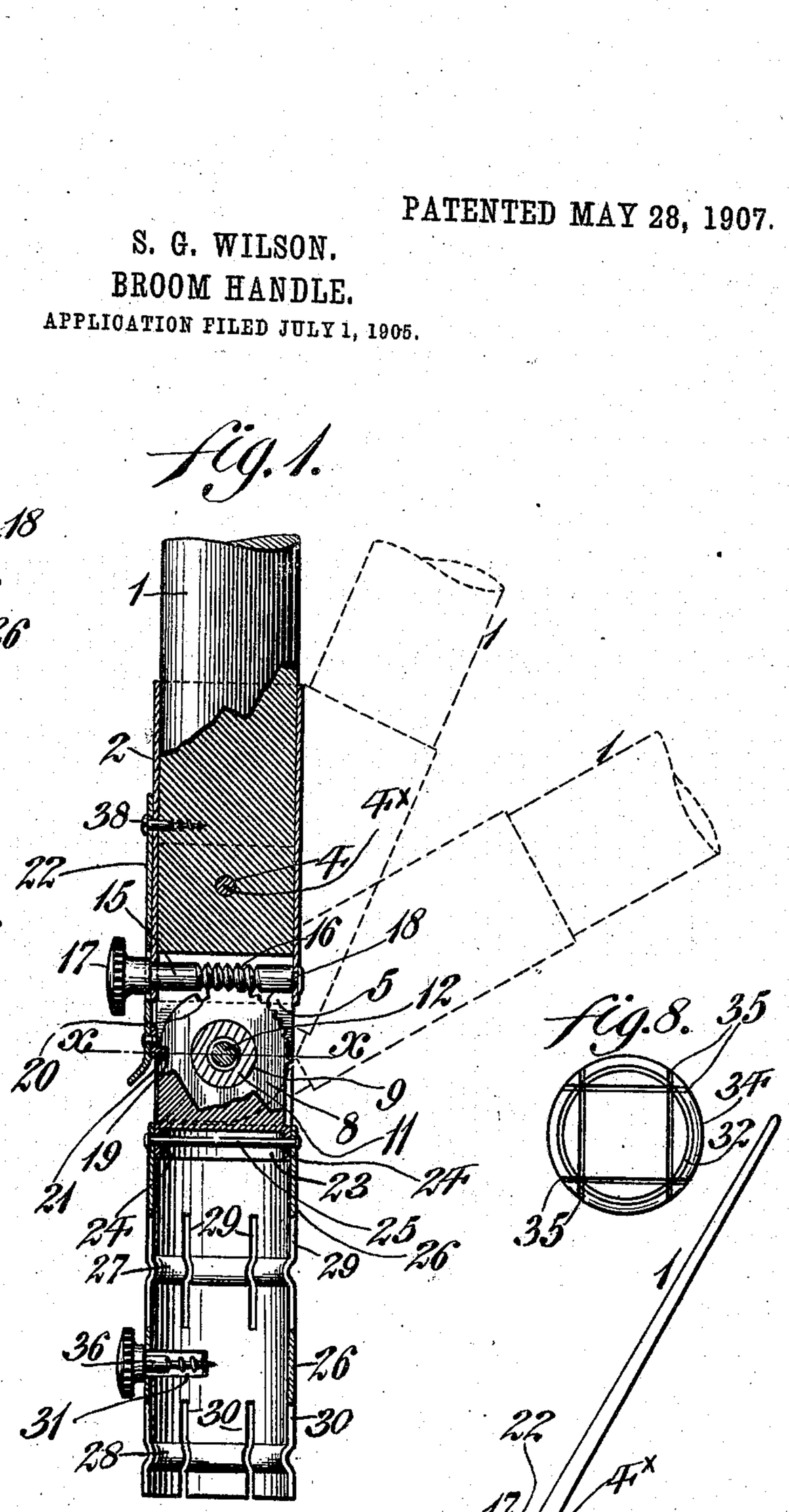

Fig. 3.

Fig. 4.

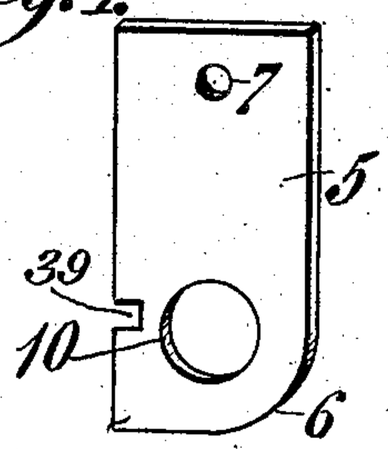

Fig. 8.

Fig. 7.

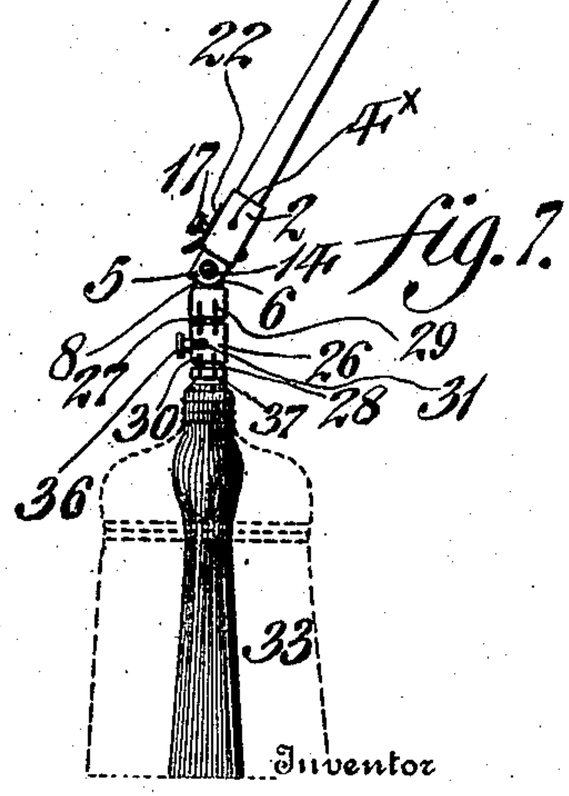

Inventor

Stephen G. Wilson.

By Wiedersheim & Laibauer

Attorneys

Fig. 5.

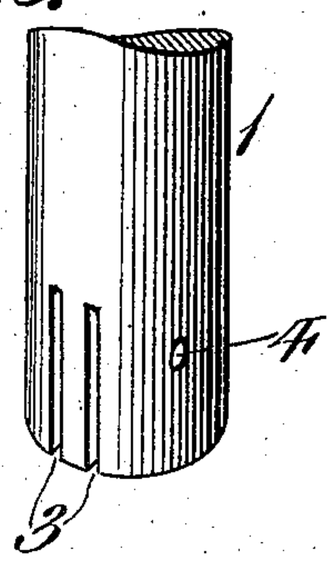

Witnesses

L. Conville,

P. F. Nagle.

Fig. 6.

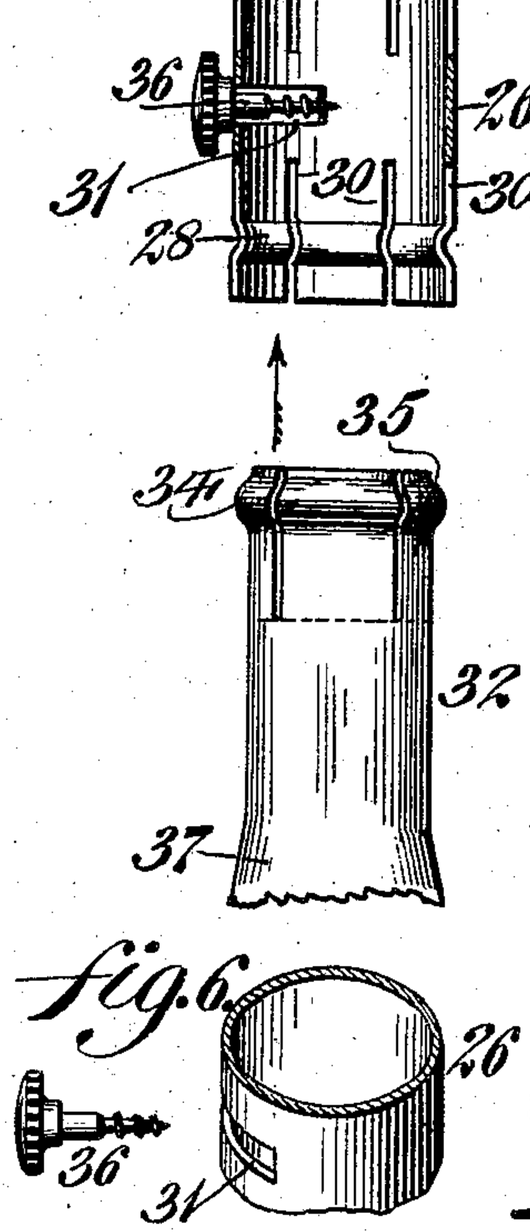

THE NORRIS PETERS CO., WASHINGTON, D. C.

UNITED STATES PATENT OFFICE.

STEPHEN G. WILSON, OF PHILADELPHIA, PENNSYLVANIA.

BROOM-HANDLE.

No. 855,152. Specification of Letters Patent. Patented May 28, 1907.

Application filed July 1, 1905. Serial No. 267,880.

To all whom it may concern:

Be it known that I, STEPHEN G. WILSON, a citizen of the United States, residing in the city and county of Philadelphia, State of Pennsylvania, have invented a new and useful Broom-Handle, of which the following is a specification.

My invention consists of a new and useful attachment for brooms, whereby the position of the handle with respect to the broom may be changed or varied.

It further consists in means for adjusting the broom with respect to the handle.

It further consists of novel details of construction, all as will be hereinafter fully set forth.

Figure 1 represents a sectional view of my improved attachment for brooms, showing two portions of the broom handle together with a third at a distance therefrom. Fig. 2 represents a sectional view on line x—x, Fig. 1. Figs. 3, 4, 5 and 6 represent perspective views of a notched plate, a plate cooperating therewith, the main portion of the broom handle and a sleeve, all portions of the device shown in detached position. Fig. 7 represents a side elevation of the device in operative position. Fig. 8 represents a plan view of the stub end of a broom handle.

Similar numerals of reference indicate corresponding parts in the figures.

Referring to the drawings: 1 designates the main portion of the broom handle to which is secured a metallic sleeve 2. In the lower portion of the broom handle are provided the slots 3 and the opening 4.

5 designates plates each having the curved lower edge 6 and provided with an opening 7, which is adapted to register or be in alinement with the opening 4 in the end of the broom handle when the plates 5 are inserted in the slots 3, it being noted that there are preferably two plates and they depend below the lower end of the broom handle. The plates 5, handle 1 and sleeve 2 are suitably held in position by a pin or other fastening device $4^{\times}$.

8 designates a plate, which is adapted to be situated between the two plates 5, said plate 8 being provided with the opening 9 which is adapted to register with an opening 10, in each of the plates 5, said openings being adapted to receive an interiorly threaded sleeve 11, which co-acts with the screw 12, each of which is provided with a knurled head designated respectively as 13 and 14 for suitable engagement with the sides of the plate 5 as best understood from Fig. 2, so that the plates 5 and the plate 8 can be locked in position with respect to each other, or varied by loosening or tightening the screw 12 and sleeve 11. It will be evident that the number of plates 8 should be either one less or one greater than that of plates 5.

Suitably journaled in the lower or extended portion of the sleeve 2 is a pin 15, provided with a worm 16 and a knurled head or handle 17, said worm 16 being adapted to mesh with the teeth 18 on the outer portion of the plate 8. This plate is also provided with the notches or recess 19 and 20 which, when the plate is in position, are adapted to receive the latch or pin 21 carried by the spring arm 22, which is in suitable connection with the collar 2. When the parts are in normal position, as seen in Fig. 1, the pin 21 will be seated in the notch or recess 19 of plate 8 and 39 of plates 5 and the parts will be held firmly in position, but when it is desired to incline the handle with respect to the broom by releasing the pin 21 from the notch and operating the worm, the handle is moved into any suitable position such as that seen in dotted lines in Fig. 1, where the latch enters the recess or notch 20 and the parts are locked in the position seen in Fig. 7. Desirable intermediate adjustments too fine to admit of separate locking notches are possible by reason of the worm adjustment and the friction between the plates caused by the pressure of heads 13 and 14 upon them. This accommodates my device to the slight alterations in angle rendered desirable to suit persons of different heights and of peculiar habits in sweeping.

Integral with or connected to the plate 8 is the cap or flanged disk 23 which is provided with suitable openings 24, through which passes the pin 25 for connection with a sleeve 26. This sleeve has preferably, the inturned ridges 27 and 28, the slits 29 and 30, and a suitable transverse slot 31 being also formed in the side of said sleeve. The construction above described constitutes an intermediate section or portion of the handle adjustable with reference to the main handle part 1 and the portion 32.

32 designates the portion or stub of the handle upon which the broom corn 33 is mounted. It is provided with the ridge 34 and the slots 35. It is adapted to be inserted

into the sleeve 26 and to be held therein by reason of the engagement of the ridges 27 and 34, and screw 36. The retaining means 36 is connected with the portion 32 of the broom (preferably screwed therein) when the same is in position in the sleeve 26 in order to retain the parts in position. The lower extremity of the portion 32 is bulged out or flares as at 37 so as to cause the contacting portions 28 and 37 to fit snugly together so as to prevent any vibration of said parts.

38 designates a screw or its equivalent to secure the spring 22 in place upon the sleeve 2.

The main part of the handle, the intermediate portion and the stub may each be considered as part of the handle, the first two being hinged together and the second and last united by a sleeve permitting adjustment by rotation.

The operation of the device will be readily seen.

In the device above described, uneven wearing of the broom is obviated, and at the same time the broom can be used as a scrub or push brush, as well, since the position of the brush with respect to the handle can be varied by grasping the operating pin 36 and rotating the portion 32 in the sleeve 26, whereby the broom will be in either the position seen in full or dotted lines in Fig. 7. Slight adjustments to suit individual wishes are also possible. The angular and rotary adjustments made possible by my construction offer a wide range of variant positions of the stub and handle.

When it is desired to vary the position of the handle with respect to the broom by rotating the thumb piece 17, after removing the latch 21, from the notches with which it is in engagement, the worm 16, co-acting with the pin 18 on the plate 8, will move the handle with respect to the remaining portions, said plate 8 moving between the two plates 5 which are readily secured to the portion of the handle and the handle may be firmly maintained in any desired position or angle with reference to the broom stub.

It will be apparent that the device just described is simple in operation, will prolong the life of the broom greatly and at the same time obviates the necessity of throwing the broom away should the handle become broken or the broom corn worn out, since by the use of this construction a new outer handle can be quickly inserted if desired, or a new broom corn and inner handle or stub can replace an old or worn out stub as desired.

Having thus described my invention, what I claim as new and desire to secure by Letters Patent, is:—

1. In a device of the character described, a divided broom handle, intermeshing plates projecting from the parts thereof, a sleeve passing through said plates and provided with interior screw threads, a screw fitting in said sleeve, the sleeve and screw being provided with heads lying on opposite sides of the plates, and a spring arm adapted to engage with the edges of the plates to hold the same in proper position.

2. In a divided broom handle, one portion connected with the broom, the intermediate portion surrounding and rotatably connected with the first portion and having a transverse slit therein, a screw adapted to pass through said slit and enter the first portion and a third portion hinged to said intermediate portion.

STEPHEN G. WILSON.

Witnesses.

JOHN A. WIEDERSHEIM,

W. S. JACKSON.