No. 842,475.

PATENTED JAN. 29, 1907.

W. L. LIGHTFORD.

FARE REGISTER.

APPLICATION FILED FEB. 2, 1906.

2 SHEETS—SHEET 1.

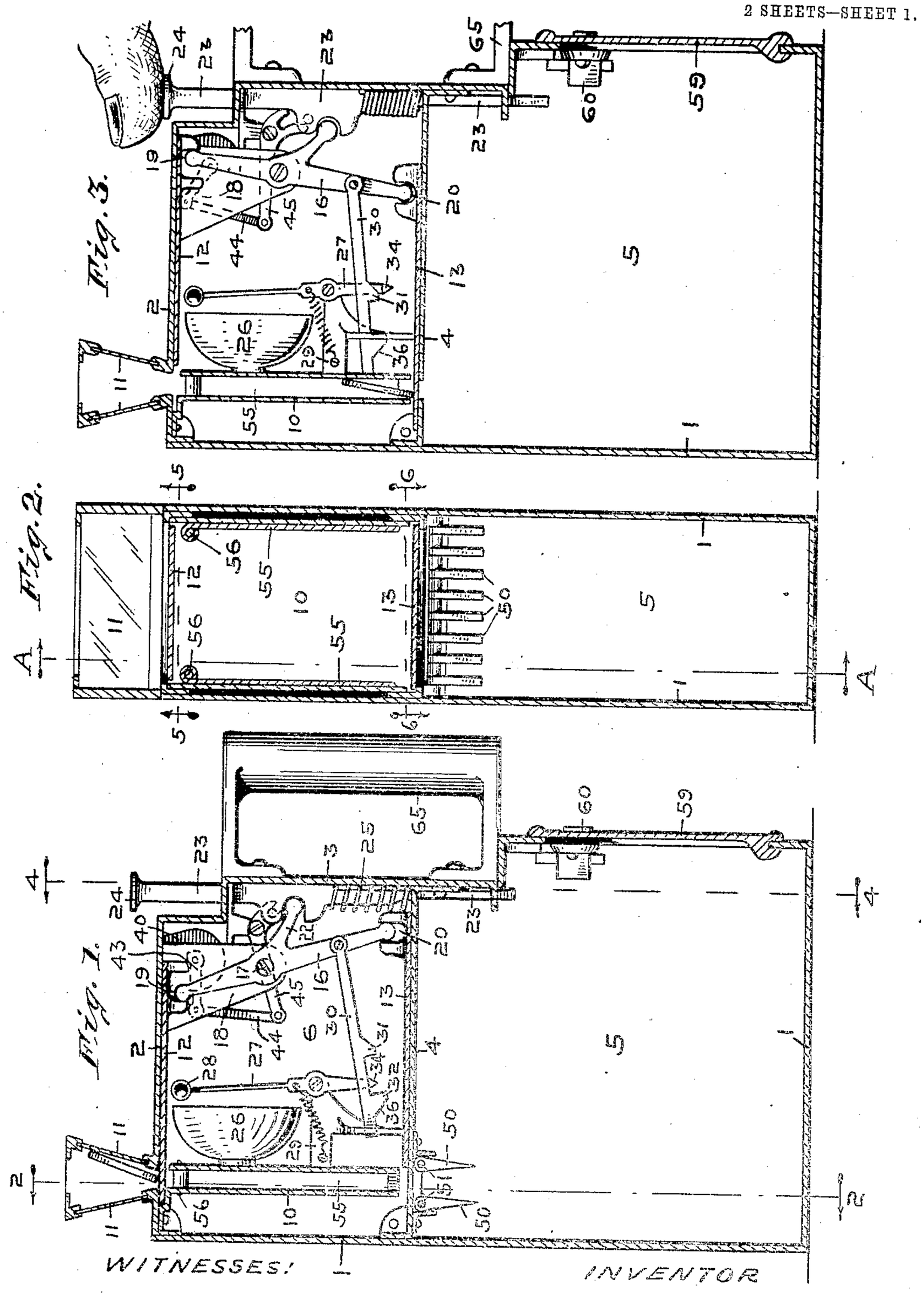

WITNESSES:

F. C. Dyer

L. B. Koerner.

INVENTOR

William L. Lightford,

By Winter & Koerner

ATTORNEYS.

THE NORRIS PETERS CO., WASHINGTON, D. C.

No. 842,475. PATENTED JAN. 29, 1907.

W. L. LIGHTFORD.

FARE REGISTER.

APPLICATION FILED FEB. 2, 1906.

2 SHEETS—SHEET 2.

Fig. 4.

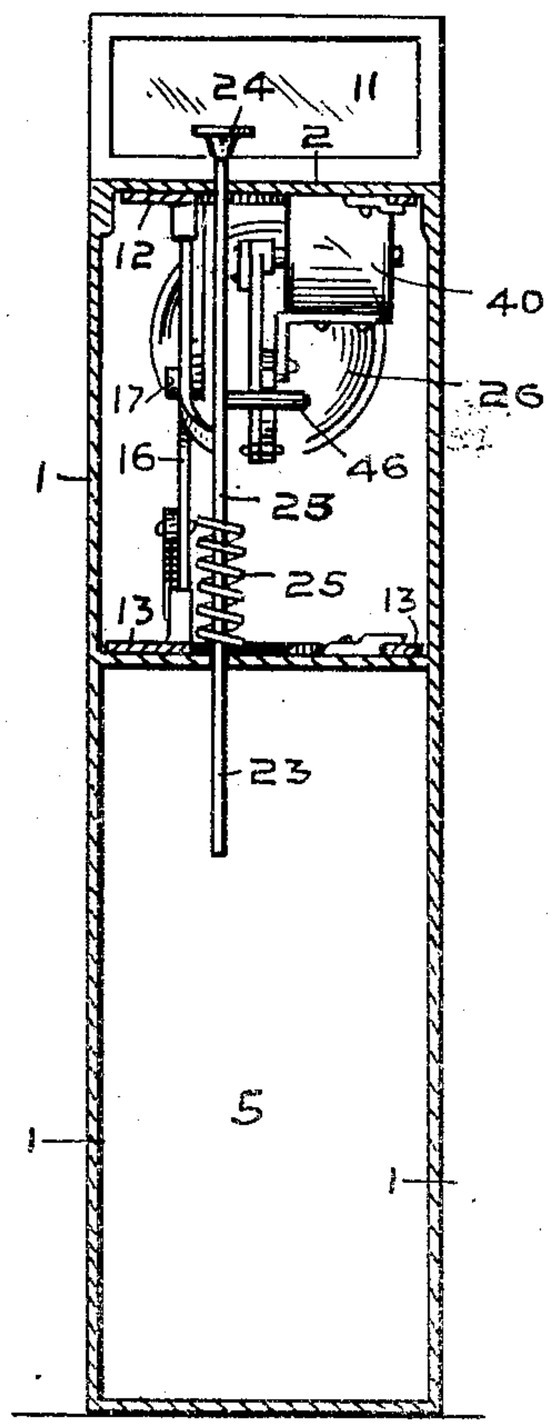

Fig. 5.

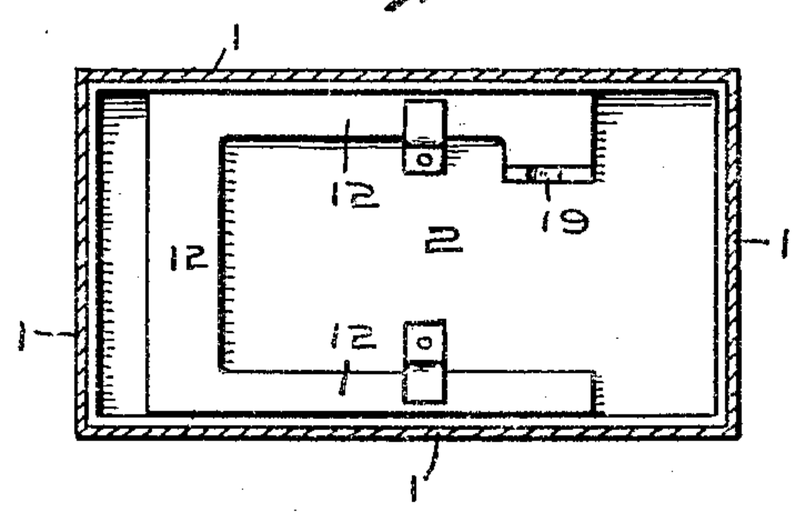

Fig. 6.

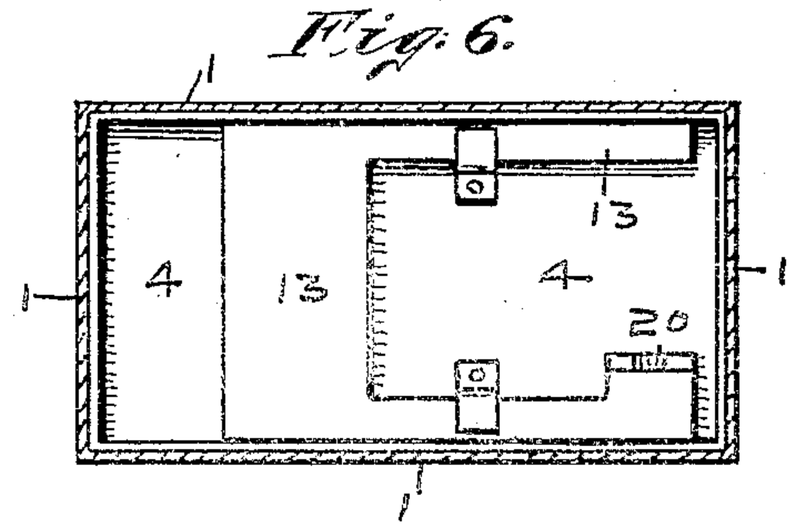

Fig. 7.

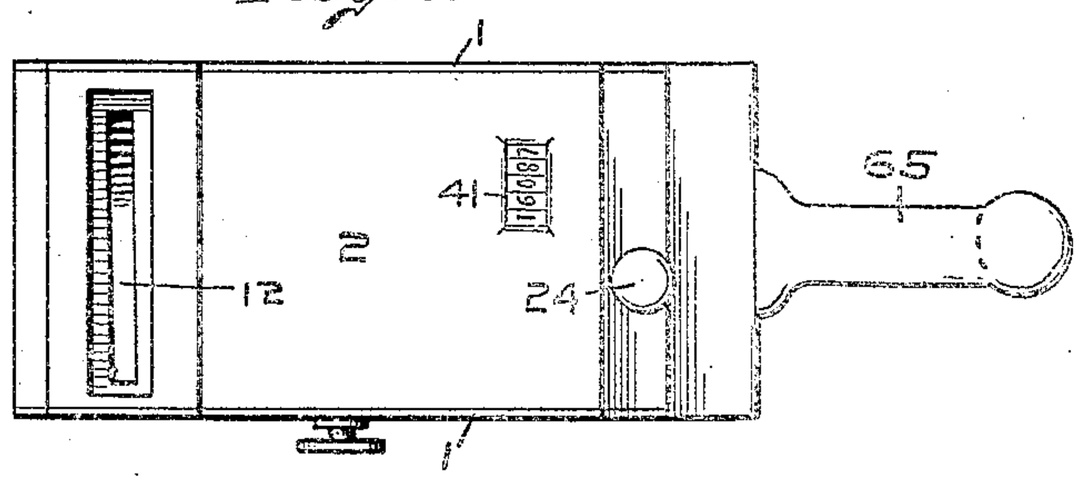

WITNESSES:

F. C. Dyne.

L. B. Woerner.

INVENTOR

William L. Lightford,

By Minturn & Worcel,

ATTORNEYS.

THE NORRIS PETERS CO., WASHINGTON, D. C.

UNITED STATES PATENT OFFICE.

WILLIAM L. LIGHTFORD, OF INDIANAPOLIS, INDIANA, ASSIGNOR TO JOHN O. SLOAN, OF INDIANAPOLIS, INDIANA.

FARE-REGISTER.

No. 842,475. Specification of Letters Patent. Patented Jan. 29, 1907.

Application filed February 2, 1906. Serial No. 299,123.

To all whom it may concern:

Be it known that I, WILLIAM L. LIGHTFORD, a citizen of the United States, residing at Indianapolis, in the county of Marion and State of Indiana, have invented certain new and useful Improvements in Fare-Registers, of which the following is a specification.

This invention relates to a combined fare collector and register; and the object of the invention is to provide a means for collecting cash-fares and tickets from passengers on common carriers, and particularly on traction-lines, the same being presented by the conductor to each passenger for their fares, thus relieving the conductor from handling the fares and also mechanically counting same.

The object consists, further, in providing a fare-register having means to prevent the coin from being feloniously removed through the same passage-way through which the coin enters the receptacle by the custodian of the register.

I accomplish the objects of my invention by the mechanism illustrated in the accompanying drawings, in which—

Figure 1 is a vertical sectional view of the fare-register on the dotted line A A in Fig. 2. Fig. 2 is a vertical transverse sectional view on the dotted line 2 2 in Fig. 1. Fig. 3 is a view similar to Fig. 1, except that the mechanism is shown in its shifted position. Fig. 4 is a vertical transverse sectional view on the dotted line 4 4 in Fig. 1. Fig. 5 is a horizontal sectional view on the dotted line 5 5 in Fig. 2. Fig. 6 is a horizontal sectional view on the dotted line 6 6 in Fig. 2. Fig. 7 is a top or plan view of the register.

In the drawings, 1 represents the body of the fare-register, which forms a receptacle for the mechanism and for the fares. The fare-receiving chute leading into the receptacle and the registering mechanism are mounted in a frame that is independent from the body 1. This frame consists of the top 2, end wall 3, and the horizontal partition 4, which when the said frame is in normal position separates the fare-receiving receptacle or chamber 5 from upper chamber 6, that contains the mechanism of the register.

The fare-register is provided with a coin-chute 10, that leads into the coin-receiving chamber 5. The register has a mouthpiece secured to the top 2, into which the passenger deposits his fare. This mouthpiece communicates with the upper end of the coin-chute 10. The mouthpiece widens at the top, as is shown, and is provided with sides which are composed of transparent material 11 in order that the character of the fare deposited may be seen by both the conductor and the passenger. It may be here stated that with this design of a mouthpiece improper amounts of fares inadvertently placed therein may be removed and changed before it is permitted to pass into the coin-chute 10.

The passage of the fares through the coin-chute 10 is controlled by means of an upper slide 12 and a lower slide 13. The upper slide is movably mounted on the under side of the top 2 (see Fig. 5) and in normal position closes the inlet to the chute 10. This arrangement of the slide supports the coin or ticket deposited into the mouthpiece before the same is permitted into the chute 10. The slide 13 is movably mounted on the horizontal partition-wall 4 and normally stands removed from the chute 10, thus leaving the latter free and unobstructed. The slides 12 and 13 are moved in opposite directions by means of the lever 16, which is pivotally mounted at 17 to the standard 18, secured to the top 2. The ends of the lever 16 engage pockets 19 and 20, formed in the slides 12 and 13.

It will be seen that the pocket 19 is considerably wider than the end of the lever 16, so that the latter must first travel the width of said pocket before moving the slide 12. By this construction the movement of the slide 12 is less than that of the slide 13, so that the latter will close the coin-chute 10 before the slide 12 opens the upper end. Thus at no time will the coin-chute be free and unobstructed, so that the backward movement of the coin out of the coin-receptacle is prevented. The lever 16 is also provided with the integral arm 22, which engages and is operated by a vertically-mounted sliding bar 23, having a finger-button 24. The sliding bar 23 normally stands in raised position, to which position it is returned after being depressed by means of the coil-spring 25.

When a fare is passed into the coin-chute 10, a signal is sounded, announcing both a perfect operation of the mechanism and a depositing of a fare. To accomplish this annunciation, I provide the bell 26, which is

suitably mounted within the upper chamber 5. A bell-tapping lever 27, provided with a ball 28, is pivotally mounted on the standard 29 and in relation to the bell 26, so that when said lever is operated the bell will be sounded. The actuation of the bell-tapping lever 27 is accomplished by means of a sliding bar 30, which is pivotally secured to the lever 16. The sliding bar 30 is provided with the shoulders 31 and 32, between which the lower end of the bell-tapping lever operates. When the sliding bar 30 is moved forward toward the bell 26 through the operation of the lever 16 and vertical sliding bar 23, the shoulder 31 engages the right-angle hook 34 on the lower end of the bell-tapping lever 27 and carries it forward. The upper end of the lever 27 above the pivot-point is necessarily moved away from the bell 26 to assume a striking position. With the forward movement of the sliding bar 30 the latter is raised to release the hook 34 on the end of the bell-tapping lever 27 in order that the latter may strike the bell 26. The upward movement of the sliding bar 30 is affected by means of the inclined face 36, that leads up to the shoulder 32. The forward end of the sliding bar engages and operates in a slot in the standard 29, and as the bar is moved forward the inclined face 36 engages the lower end of the slot. The inclination of the face 36 is such that the bell-tapping lever will be moved into striking position before the shoulder 31 is released from the hook 34.

When the sliding bar 23 is depressed, which permits the fare to pass from the mouthpiece into the coin-chute 10, a counter for keeping a record of the fares is actuated. This is accomplished by providing a suitable counter 40, which is secured to the top 2, as shown, which is provided with an inspection-aperture 41, (see Fig. 7,) through which the totals may be read. The counter is actuated at each depression of the sliding bar 23 by means of the levers 44 and 45, the latter being affected by a horizontal pin 46, rigidly mounted on the sliding bar 23. The lever 45 is pivoted near that end from which it is actuated, so that one end will have considerably more movement than the other. By so mounting the lever a slight depression on the sliding bar 23 will cause the counter to add a fare, which will stand charged against the conductor whether said fare is subsequently permitted to pass into the register or not before any of the remaining mechanism is affected. The different positions assumed by the several parts when the sliding bar 23 is in normal and depressed position are clearly shown in Figs. 1 and 3.

While it is of great importance to provide a device that will insure a safe and accurate method for the collection and registration of fares, it is equally as important to provide a device which will frustrate all attempts to rob or "tap" the device of the fares that have been deposited by any person authorized for its custodianship and for the collection of fares. The method employed during the past by unscrupulous persons for removing coin from this class of registers was to invert them. This position of the register would cause the coin in the receptacle to drop into the discharge end of the coin-chute, and by passing the register through certain manipulations ascertain through repeated trials the coin would be ingeniously removed through the same passage-way through which the coin is introduced.

While the counter in my register in a large measure removes the possibility of feloniously extracting coin from the register by disclosing the discrepancy of actual cash in the register and the total shown on the counter, I provide other means which further preclude the possibility of "tapping" the register. These means consist, first, in providing a plurality of fingers 50, which are pivotally arranged on the parallel rods 51, one of which is mounted on each side of the discharge end of the coin-chute 10. The fingers 50 are staggered with relation to the fingers on the adjacent rod, so that when the register is inverted the said fingers will lap each other as they fall across and close the opening in the coin-chute 10. While these fingers usually drop across the opening, they have been known to fail when the register is laid on its side and thence slowly turn into an inverted position. This manipulation of the register would cause some of the coin to drop between the open fingers, after which they were slowly moved through the coin-chute 10. In my present device, however, I have gone farther by providing wings 55, which are pivotally mounted within the coin-chute 10. These wings are pivotally mounted in the upper and narrow sides of the chute and have movement in a direction opposite that of the fingers 50, so that should the register be tilted in a direction parallel with the greatest width of the coin-chute the wings would drop to the lower side, and thus remove all possibility of coin passing backward out through the coin-chute 10. The coin can legitimately be removed from the receptacle through the door 59 by means of a proper key for the lock 60. The register is also provided with a suitable handle 65, so that it can conveniently be carried in the hand.

I claim—

1. A fare-register consisting of a coin-receptacle, a coin-chute leading from the exterior of said register to the coin-receptacle, slides susceptible to alternate movement transversely of said chute, and means for moving said slides so that the lower end of the chute will be closed before the upper end is opened.

2. A fare-register consisting of a coin-re-

ceptacle, a coin-chute leading from the exterior of said register to the coin-receptacle, slides, and means for alternately moving said slides across the ends of the chute to constantly keep the latter obstructed.

3. A fare-register consisting of a coin-receptacle, a coin-chute leading from the exterior of the register to the coin-receptacle, means for determining the admission of the coin into the coin-chute, means for determining the admission of the coin from said chute to the coin-receptacle, and means for counting said coin in advance of such admission.

4. A fare-register consisting of a coin-receptacle, a coin-chute leading from the exterior to the coin-receptacle, slides susceptible to movement transversely of said chute, means for unevenly moving said slides across the opening of said chute, a counter, said counter being actuated by the slide-actuating means, a signal device, means for actuating said signal device, and means to restore the parts to normal.

5. A fare-register consisting of a coin-receptacle, a coin-chute leading from the exterior to the coin-receptacle, slides susceptible to movement transversely of said chute, means for alternately actuating said slides of each other, and safety means mounted within the coin-chute and adapted to close the latter by gravitation when the register is tilted at right angle to the movement of said slides.

6. A fare-register consisting of a coin-receptacle, a coin-chute leading from the exterior to the coin-receptacle, slides susceptible to movement transversely of said chute, means for alternately actuating said slides of each other, a safety means pivotally mounted within the coin-chute, and adapted to close the latter when the register is tilted at right angle to the movement of said slides, and safety means pivotally arranged on both sides of the discharge end of the coin-chute, and adapted to close the latter when the register is inverted.

7. A fare-register consisting of a coin-receptacle, a coin-chute leading from the exterior to the coin-receptacle, a slide at the entrance to said chute for temporarily supporting the fare, a safety-slide at the discharge end of said chute, a vertical lever engaging both slides, a sliding bar engaging said vertical lever for actuating both slides, a counter, means on the counter to be engaged and operated by said sliding bar, a bell, a bell-hammer lever provided with a hook, a horizontal lever pivotally attached to the vertical lever and riding on the bell-hammer lever, a shoulder formed on the horizontal lever to engage said hook and operate said bell-hammer lever, an inclined face on said bell-hammer lever, and a guide for said horizontal lever which engages the inclined face, to disconnect said lever from the bell-hammer lever.

In witness whereof I have hereunto set my hand and seal, at Indianapolis, Indiana, this 26th day of January, A. D. 1906.

WM L. LIGHTFORD. [L. S.]

Witnesses:
F. W. WOERNER,
L. HELMUTH.