No. 832,084. PATENTED OCT. 2, 1906.

B. F. SAURMAN.

RAILWAY SIGNALING SYSTEM.

APPLICATION FILED NOV. 15, 1905.

5 SHEETS—SHEET 1.

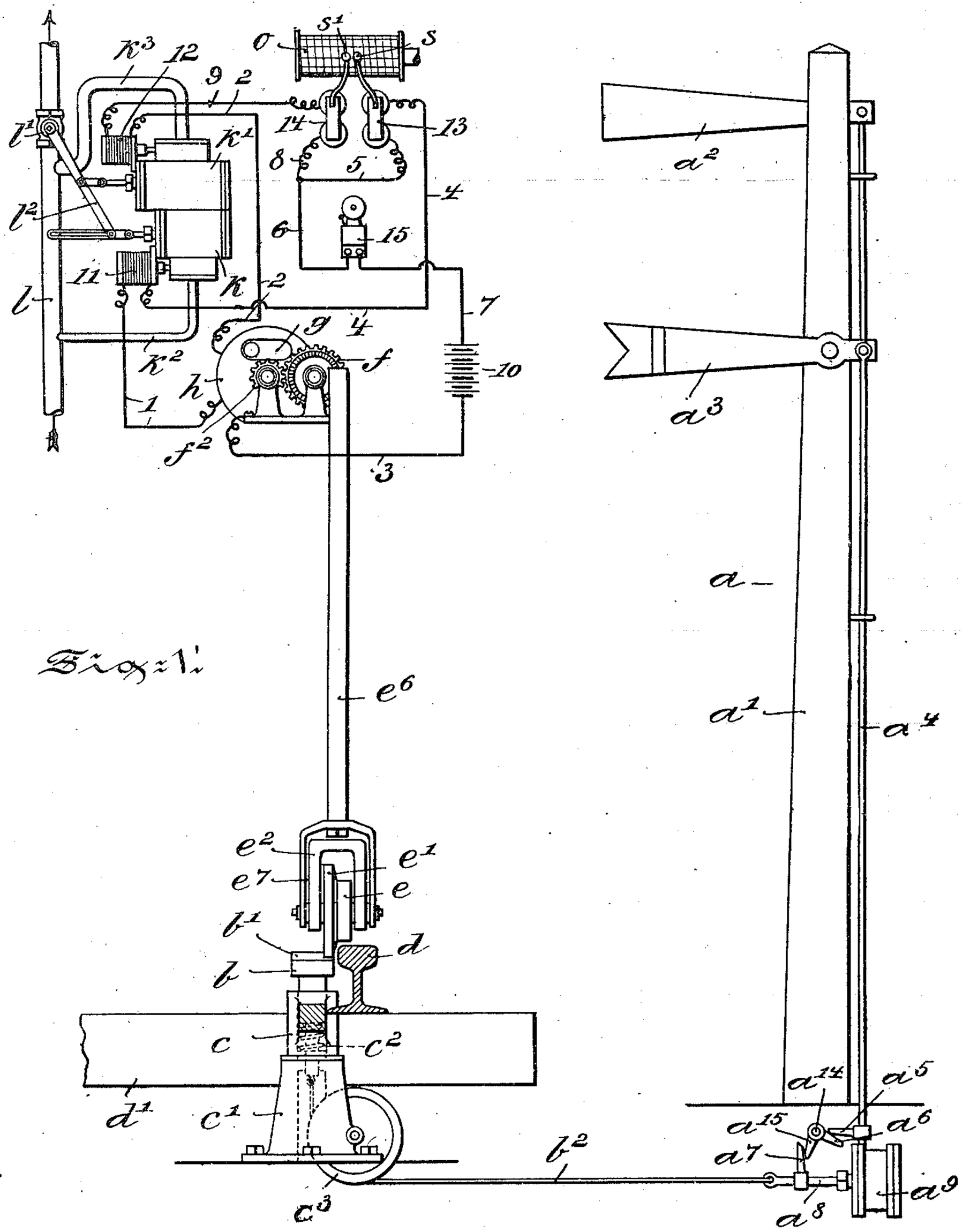

Witnesses:
Wilhelm Voigt
Thomas M. Smith

Inventor:
Benjamin F. Saurman,
By J. Walter Douglas,
Attorney.

No. 832,084. PATENTED OCT. 2, 1906.

B. F. SAURMAN.

RAILWAY SIGNALING SYSTEM.

APPLICATION FILED NOV. 15, 1905.

5 SHEETS—SHEET 2.

Fig. 2.

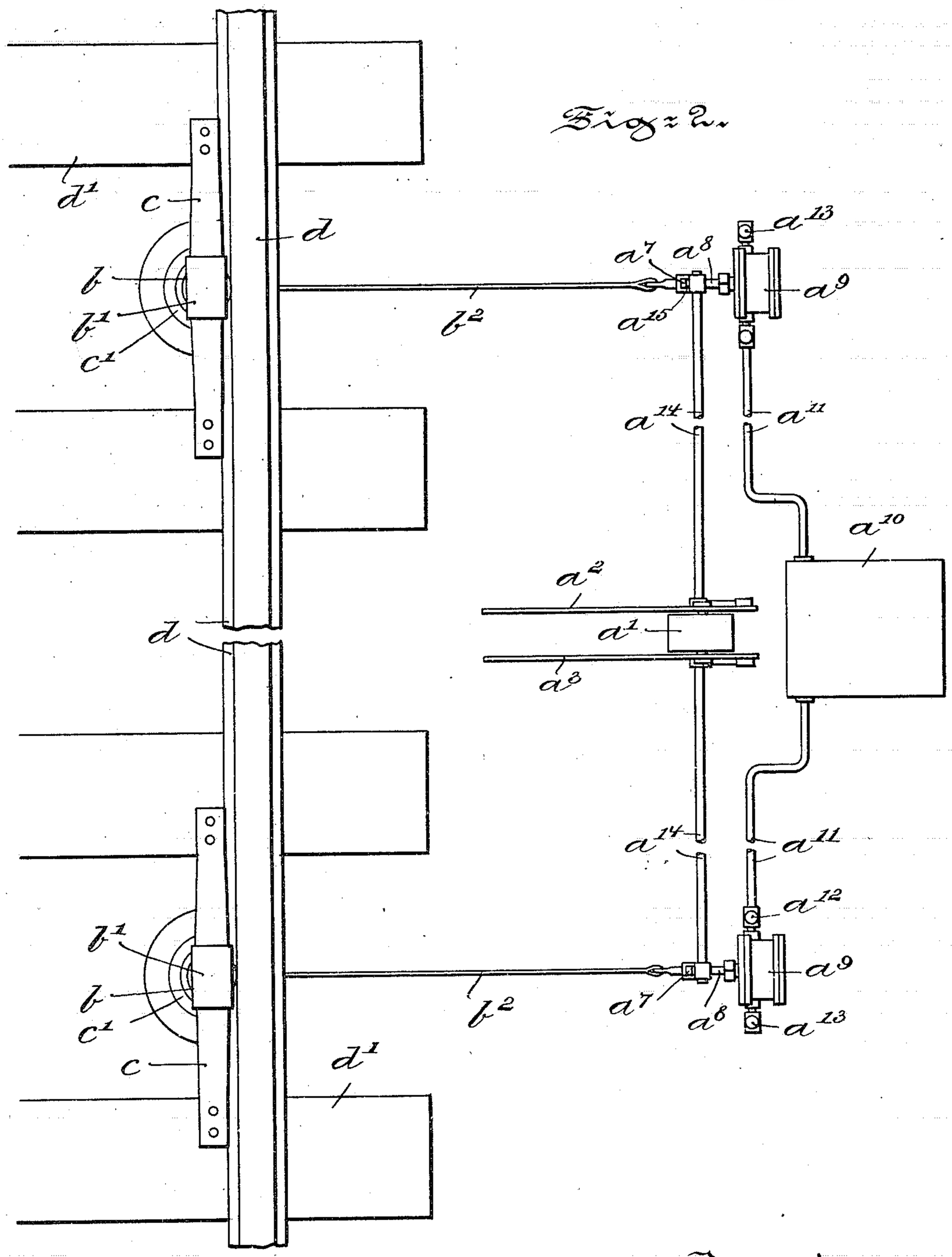

Witnesses:
Wilhelm Vogt
Thomas M. Smith

Inventor:
Benjamin F. Saurman,
By J. Walter Douglass,
Attorney.

No. 832,084. PATENTED OCT. 2, 1906.

B. F. SAURMAN.

RAILWAY SIGNALING SYSTEM.

APPLICATION FILED NOV. 15, 1905.

5 SHEETS—SHEET 3.

Fig. 3.

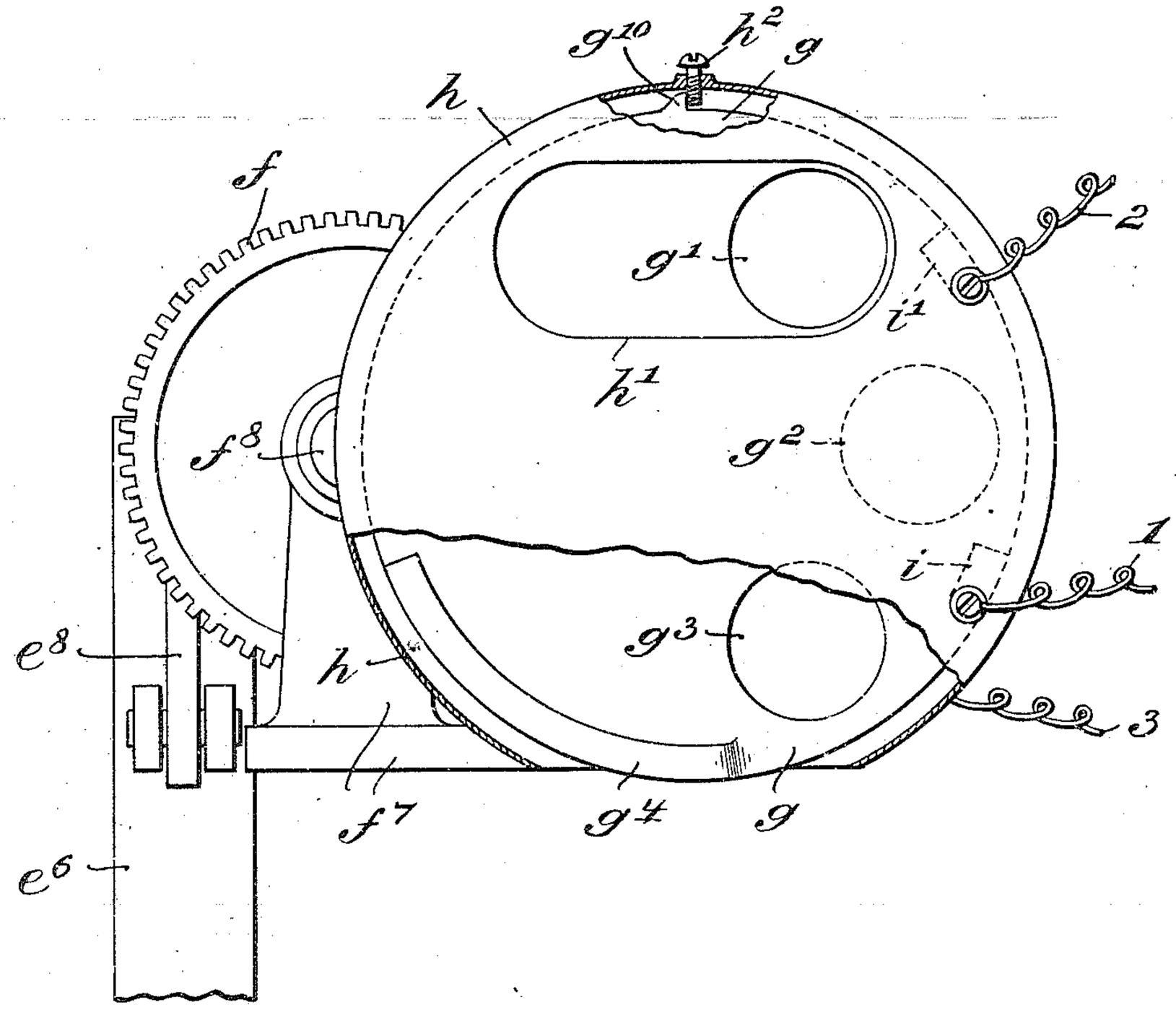

Fig. 4.

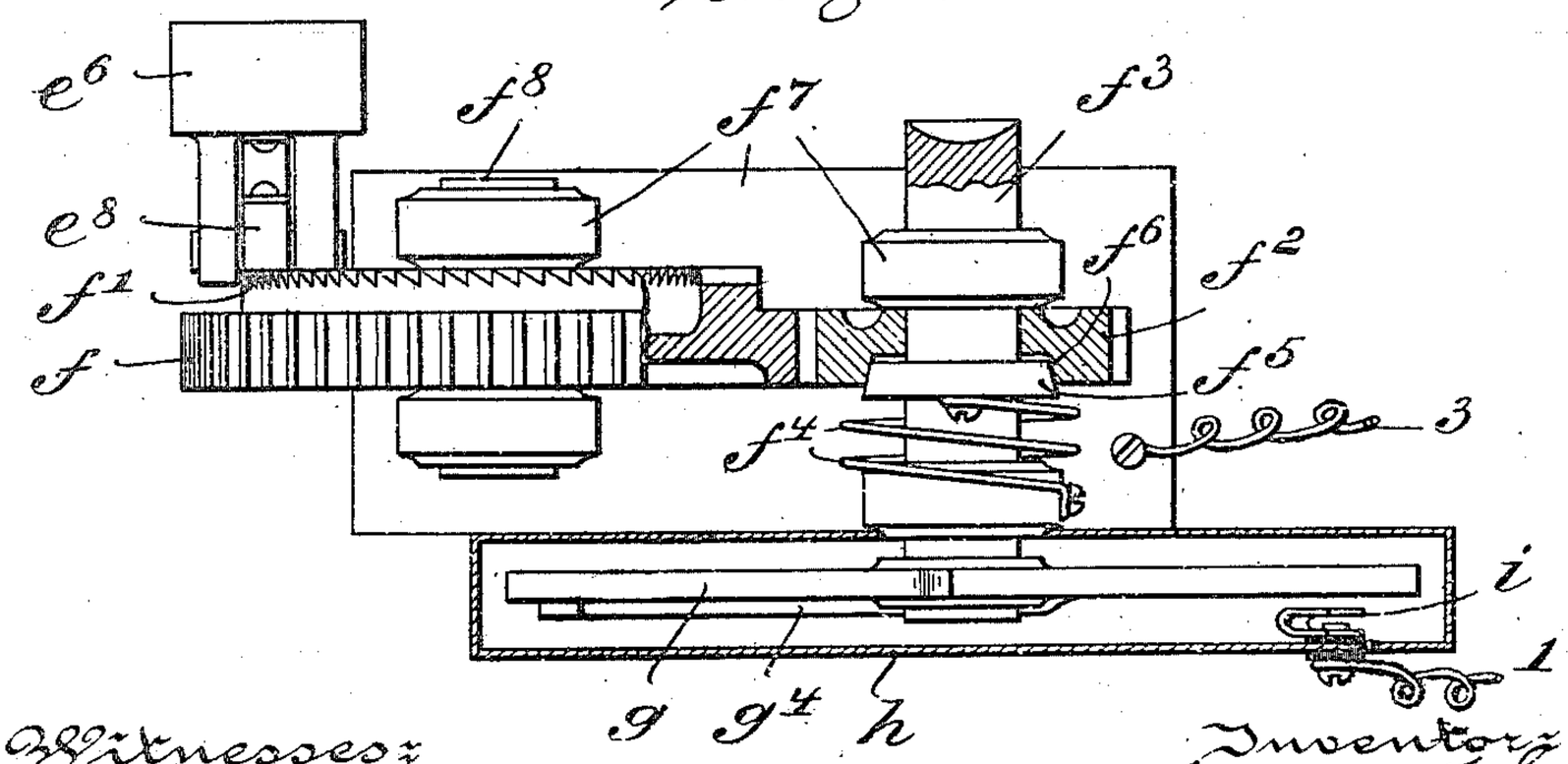

Witnesses:
Wilhelm Vogt
Thomas M. Smith

Inventor:
Benjamin F. Saurman
By J. Walter Douglass,
Attorney.

No. 832,084. PATENTED OCT. 2, 1906.

B. F. SAURMAN.

RAILWAY SIGNALING SYSTEM.

APPLICATION FILED NOV. 15, 1905.

5 SHEETS—SHEET 4.

Fig. 5.

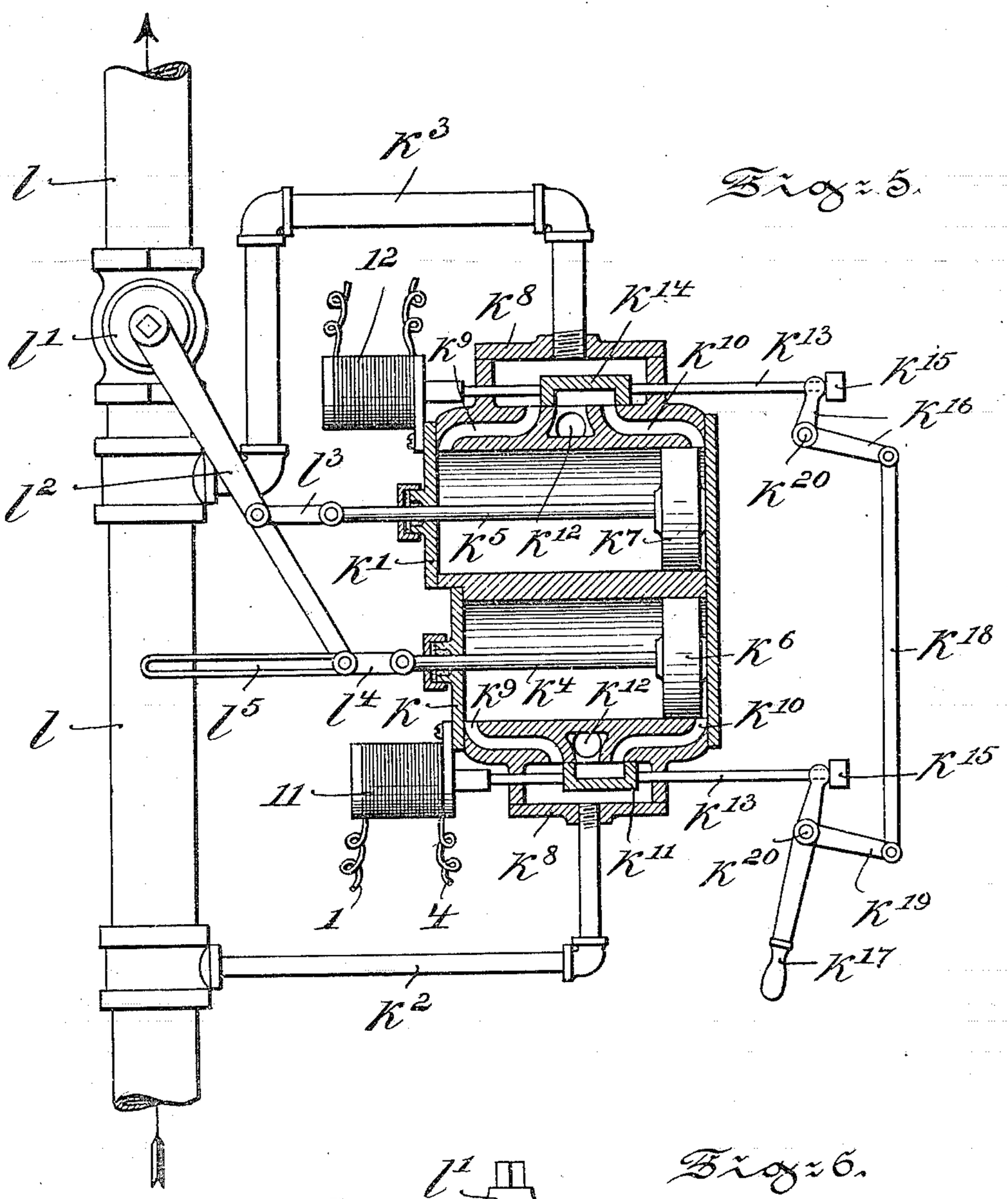

Fig. 6.

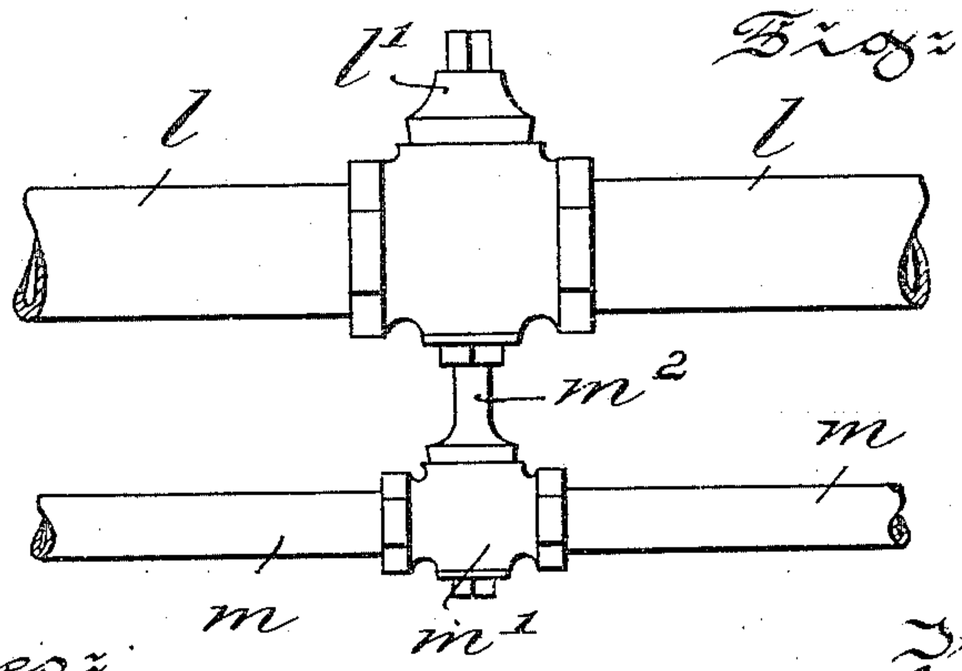

Witnesses:
Wilhelm Vogt
Thomas M. Smith.

Inventor:
Benjamin F. Saurman,
By J. Walter Dingles
Attorney.

No. 832,084. PATENTED OCT. 2, 1906.

B. F. SAURMAN.

RAILWAY SIGNALING SYSTEM.

APPLICATION FILED NOV. 15, 1905.

5 SHEETS—SHEET 5.

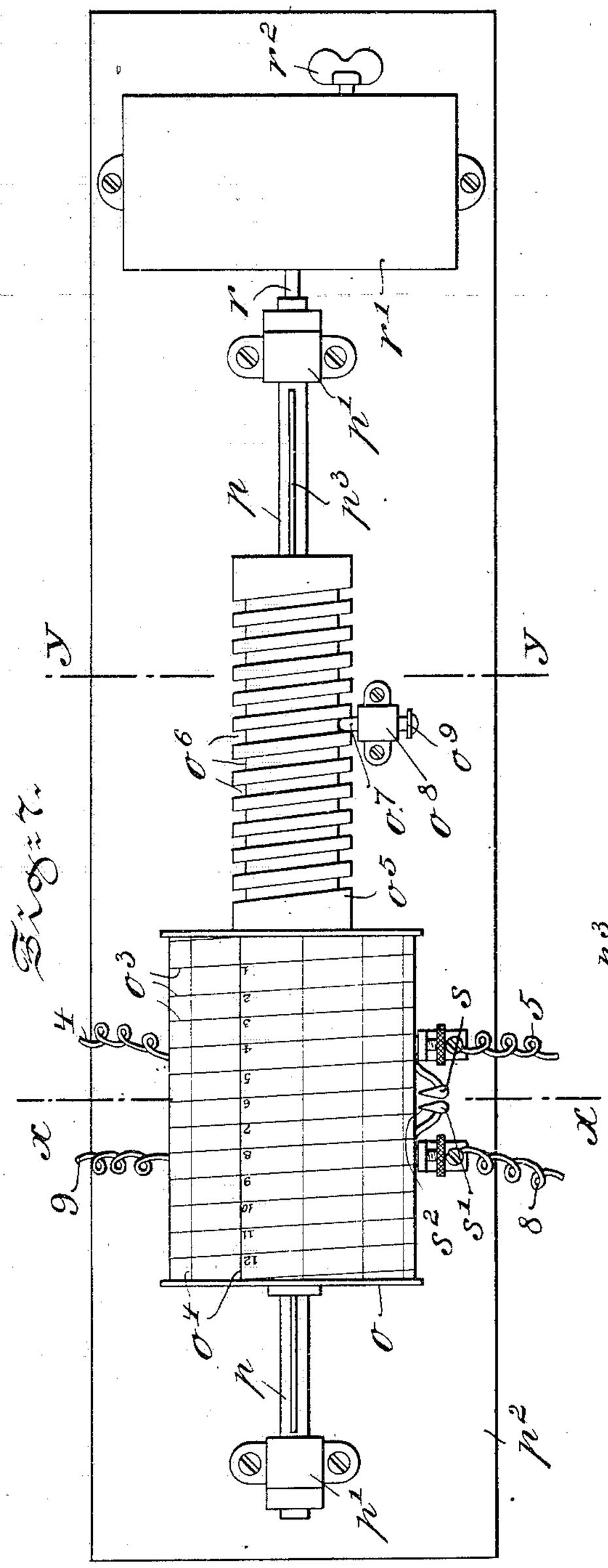

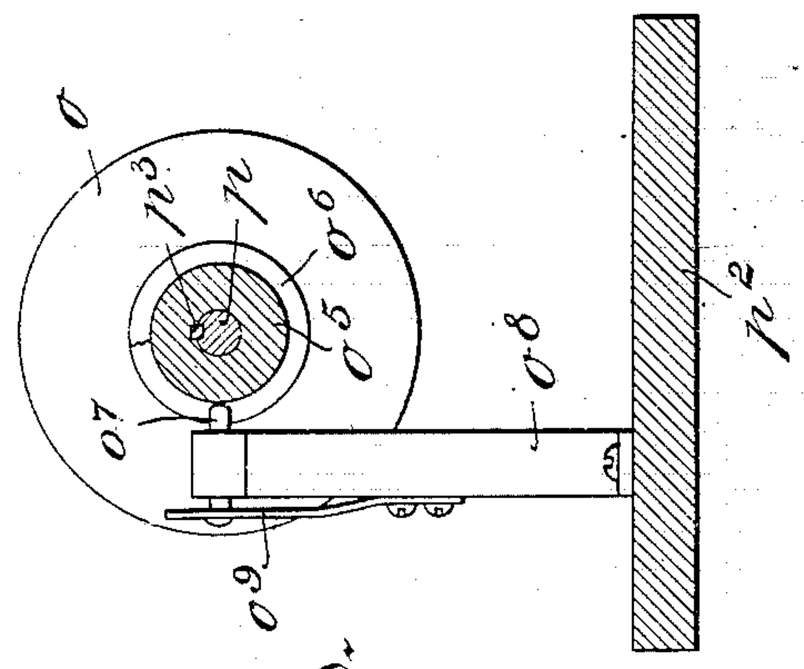

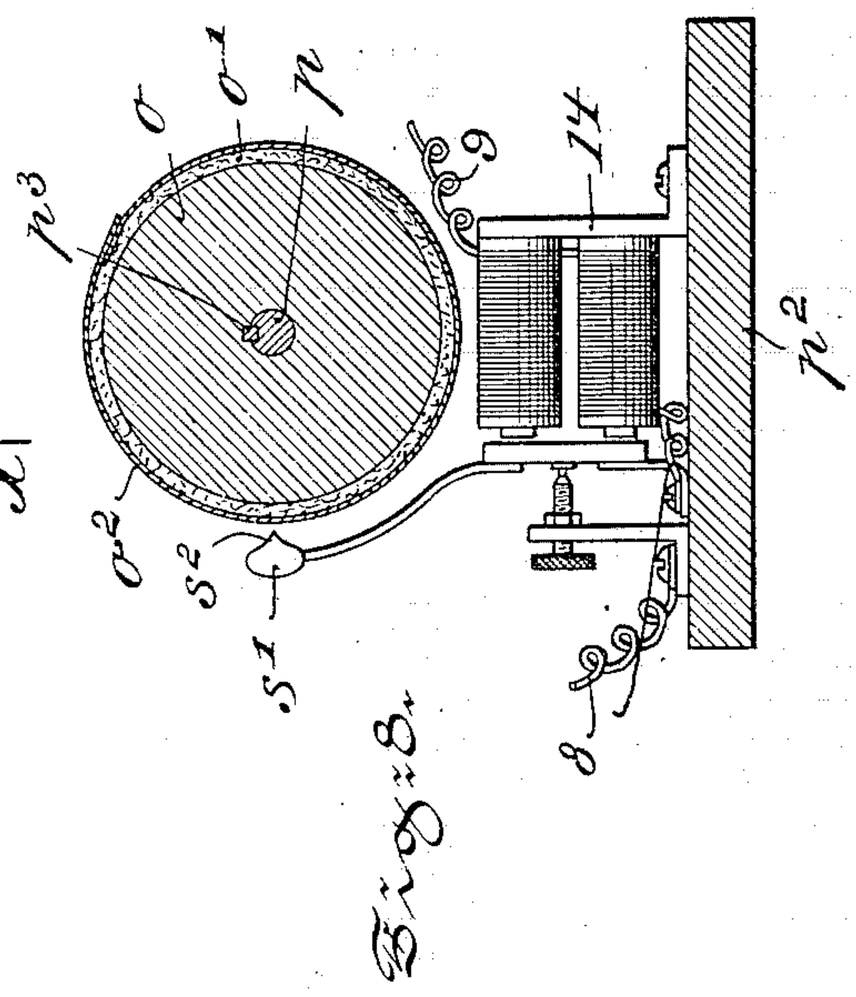

Witnesses:
Wilhelm Voigt
Thomas M. Smith

Inventor:
Benjamin F. Saurman,
By J. Walter Douglass,
Attorney.

UNITED STATES PATENT OFFICE.

BENJAMIN F. SAURMAN, OF PHILADELPHIA, PENNSYLVANIA.

RAILWAY SIGNALING SYSTEM.

No. 832,084. Specification of Letters Patent. Patented Oct. 2, 1906.

Application filed November 15, 1905. Serial No. 287,392.

To all whom it may concern:

Be it known that I, BENJAMIN F. SAURMAN, a citizen of the United States, residing at the city of Philadelphia, in the county of Philadelphia and State of Pennsylvania, have invented certain new and useful Improvements in Railway Signaling Systems, of which the following is a specification.

My invention has relation to a railway signaling system especially such as has been shown and described in Letters Patent No. 790,320, granted to me under date of May 23, 1905; and in such connection it relates more particularly to means controlled by the visual signal in the cab of the locomotive to automatically shut off the steam and to permit of the actuation of the air-brakes to bring the train to a standstill when the engineer fails to stop the train at a danger-signal displayed outside and inside of the locomotive and to means to automatically record and to state the time at which such failure of duty on the part of the engineer occurred.

The principal objects of my invention are, first, to provide the locomotive with an automatic steam and compressed-air controlling mechanism which is controlled by the visual signal actuated by mechanism controlling the wayside signals, to automatically shut off the steam to the steam-cylinders of the engine, and to relieve the pressure of the air in the air-brakes when the engineer fails to heed the danger-signal displayed by the wayside signal, the visual signal, and the audible signal arranged in the cab of the locomotive; second, to provide the locomotive or other portion of a train with a recording mechanism to record the time at which the engineer failed to manually apply the air-brakes and to shut off the steam at the display of the danger-signal, and, third, to provide means to permit the engineer to prevent the automatic actuation of the air-brakes and the shutting off of the steam to the steam-cylinders of the engine.

The nature and scope of my invention will be more fully understood from the following description, taken in connection with the accompanying drawings, forming part hereof, in which—

Figure 1 is a diagrammatic view illustrating a railroad wayside signal, means for controlling the wayside signal and actuating visual and audible signals, means for automatically cutting off the steam, and means for recording such cutting off of the steam, both controlled by the visible signal, all arranged in the cab of an engine, embodying main features of my invention. Fig. 2 is a top or plan view illustrating the wayside signal and the means for actuating a search-wheel controlling the visible and audible signals and by the visual signal controlling a throttle-valve for steam and a time-recording mechanism. Fig. 3 is a detail view, enlarged, illustrating, partly in front elevation and partly in section, the visual signal, the means for actuating the same, and means carried by the signal and by the housing of the same to close an electric circuit in a certain position of the visual signal. Fig. 4 is a top or plan view of Fig. 3, partly in section. Fig. 5 is a detail view, enlarged, illustrating, partly in elevation and partly in section, steam-cylinders connected with the steam-supply pipe of the engine, a valve arranged in the steam-pipe actuated by the pistons of the cylinders, and solenoids connected with the slide-valve of the steam-cylinders. Fig. 6 is a detail view, enlarged, illustrating in elevation the steam-supply pipe and the pipe for compressed air and the manner of connecting the steam-valve with the air-valve. Fig. 7 is a detail view, enlarged, illustrating in top or plan view a drum, a clock for rotating the drum, means for shifting the drum longitudinally, and electrically-actuated means for perforating the paper covering of the drum. Fig. 8 is a cross-sectional view taken on the line $x\ x$ of Fig. 7, illustrating a perforating-hammer held in close proximity to the drum and an electromagnet for actuating the same; and Fig. 9 is a similar view taken on the line $y\ y$ of Fig. 7, illustrating a movable bolt carried by a post engaging a spiral groove arranged in an extension of the drum which serves to shift the drum longitudinally on its shaft.

Referring to the drawings with reference to Figs. 1 and 2 thereof, a represents a wayside signal consisting of a post a', to which is movably secured signal-arms a^2 and a^3, which by means of rods a^4 are normally held in a horizontal or operative position. These signal-arms a^2 and a^3 are colored, preferably green and red, and form when occupying their operative positions danger-signals. When one of these arms is depressed, the caution-signal is formed, and by depressing both arms the free-track signal is established. To the free end of each of the rods a^4 is secured an arm a^5, projecting in the path of an arm a^6, se-

cured to a shaft a^{14}, the arm a^{15} of which is engaged by an arm a^7, secured to a piston-rod a^8. When the piston-rod a^8 is moved toward a cylinder a^9, the movement is transmitted to the arm a^6, shaft a^{14}, and arm a^{15}, which in turn by actuating the arm a^5 raises the rods a^4 and depresses the signal-arms connected with the same. Each of the signal-arms a^2 and a^3 is, however, independently operated, and for this purpose there is provided a cylinder a^9 for each in which actuating fluid—for instance, compressed gas stored in a tank a^{10}—is introduced by a pipe a^{11}, controlled by a valve a^{12}, and permitted to escape therefrom by a valve a^{13}. The movement of the piston-rods a^8, controlling the movement of the signal-arms a^2 and a^3, is also utilized to control the movement of visual and audible signals as well as of means for automatically cutting off steam to the steam-cylinders and permits of the actuation of air-brakes and of time-recording mechanism preferably arranged in the cab of a locomotive. (Not shown.) The preferred mechanism employed for this purpose is as follows: As shown in Figs. 1 and 2, each of the piston-rods a^8 by means of a cable or chain b^2 is connected with a block b, the arched head b' of which is arranged adjacent to the rail d. The blocks b are arranged a certain distance apart to permit of actuation of the same independently of each other for the purpose to be presently more fully described. Each block has a range of sliding movement in a vertical plane within a bracket c, secured to the ties d', and is held therein in an elevated or operative position by a spring c^2. The standard c' is provided with a sheaf-wheel c^3, over which the chain or cable b^2 passes, as shown in Fig. 1. The arched head b' of each of the blocks b is located in the path of the flange e' of a wheel e, hereinafter called the "search-wheel," and which wheel by means of a yoke e^2 is secured in a manner not shown to any suitable part of the engine of a train passing over the rails d and is adapted to travel in close proximity to a rail d, as shown in Fig. 1. The yoke e^2 is loosely mounted in the forked end e^7 of a rod e^6, preferably terminating in the cab of an engine, which rod is provided at its free end with a pawl e^8, held in engagement with the teeth f' of a gear-wheel f of a visual signal, to be presently more fully described. As shown in Figs. 3 and 4, the gear-wheel f meshes with a gear-wheel f^2, loosely mounted on a shaft f^3, and is held in frictional engagement therewith by means of a spring f^4 by forcing a disk f^5, fixed to the shaft f^3, into a complemental depression f^6, arranged in the gear-wheel f^2 and in such manner as to couple the gear-wheel f^2 to the shaft f^3. The shaft f^8 of the gear-wheel f and shaft f^3 of the gear-wheel f^2 are supported by a standard f^7, which may be secured to any suitable part of the engine, but preferably adjacent to a window in the cab, which commands a plain view of the track and the wayside signals a^2 and a^3. To the shaft f^3 of the gear-wheel f^2 is arranged a disk g, in which are inserted preferably circular panes of glass g', g^2, and g^3, of which the pane g' consists of clear white or frosted glass, the pane g^2 of green glass, and the pane g^3 of red glass corresponding in color to the red-colored arm a^3 of the wayside signal a. These three panes of glass g', g^2, and g^3 form the visual signal, which is inclosed in a housing h, preferably arranged adjacent to a window in the engine-cab facing the track. An opening h', arranged in the housing h, permits of the exposure of two of the panes. However, in the normal position of the visual signal, which is controlled by a projection g^{10} of the disk g, abutting against a threaded bolt h^2 of the housing h, the white pane g' is only visible therein, indicating a clear track. Preferably behind the housing h and opposite its opening h' is arranged a light (not shown) of sufficient power to conspicuously light up the visual signals exposed in the opening h' and to make the same an object which cannot fail to be observed at all times. When the engine of the train is passing over the first of the blocks b, which occupies an elevated position when the green-colored wayside-signal arm a^2 occupies its operative horizontal position, the search-wheel e, contacting therewith with its flange e', will be elevated in the yoke e^2. The movement of the search-wheel e is transmitted to the gear-wheels f and f^2, which latter by turning the shaft f^3 rotates the disk g and moves the green pane g^2 opposite the opening h' in the housing h, in which now the white pane g' and the green pane g^2 are exposed, both of which form the caution-signal. The train proceeding on its way, the search-wheel e by reaching the second of the blocks b, controlled by the mechanism operating the red-colored upper arm a^2 of the wayside signal, will again be actuated, which movement of the search-wheel transmitted to the disk h will swing the white-colored pane of glass g' beyond the opening h' in the housing h and bring the red-colored pane of glass g^3 into the position previously occupied by the green-colored glass g^2. Red and green will now be exposed in the opening h', which two colors form the danger-signal. At the display of the caution-signal by the visual signal an audible signal is sounded and the steam conducted to the steam-cylinders of the engine is partially cut off, as well as the pressure of the air in the air-brakes is partially relieved, permitting a slight application of the brakes and the running of the train under half-steam pressure, while at the display of the danger-signal by the visual signal the steam is completely cut off and the brakes fully applied. At the same time a record is made not alone of every caution-signal displayed by the visual signal,

but also of each danger-signal shown by the same. The disk g controls the cutting off of the steam, the application of the air-brakes, and the recording of the signals by the following preferred mechanism:

As shown in Figs. 1, 3, and 4, to the housing h of the visual signal and properly insulated therefrom are secured wires 1 and 2, connected to contact-springs i and i', held in the path of a contact-strip g^4, secured to the disk g, while a wire 3 is preferably directly secured to the standard f^7. The wires 1 and 3, in conjunction with wires 4, 5, 6, and 7, serve to close a circuit of a battery 10 through a solenoid 11, forming a part of an automatic steam and compressed-air controlling mechanism, an electromagnet 13 forming a part of a recording mechanism and an alarm-bell 15 forming an audible signal, in which instance the contact-strip g^4 has been brought into contact with the contact-spring i, and the circuit is completed by the disk g, shaft f^3, housing h, and standard f^7. If the disk g of the visual signal has been shifted to display the danger-signal, the contact-strip g^4 has been brought into engagement with the contact-spring i' and out of engagement with the contact-spring i. In this instance the circuit of the battery 10 by means of the wires 2, 9, 8, 6, 7, and 3 has been closed through the solenoid 12 of the automatic steam and compressed-air controlling mechanism, the electromagnets 14 of the recording mechanism, and the alarm-bell 15 of the audible signal, each of which will be presently more fully described. As shown in Figs. 1 and 5, the automatic steam and compressed-air controlling mechanism preferably consists of two cylinders k and k', which by means of pipes k^2 and k^3 are connected with a steam-pipe l, supplying the cylinders of the locomotive (not shown) with steam. The pipe l is provided with a cut-off or throttle-valve l', arranged in the same in advance of the usual throttle-valve, (not shown,) which is manually actuated by the engineer and serves to regulate and to cut off the supply of steam to the steam-cylinders of the locomotive. (Not shown.) The valve l' is provided with a lever l^2, which by means of a link l^3 is connected with the piston-rod k^5 of the cylinder k' and by a link l^4 with the piston-rod k^4 of the cylinder k. The pistons k^6 and k^7 of the cylinders k and k' are held in their normal inoperative position by the steam entering the same through the steam-chests k^8 and inlet-ports k^9. In this position the lever l^2 of the valve l' is held in such a position as to permit of the free passage of steam through the pipe l. When, however, the solenoid 11 has been energized by the closing of the circuit by the contact-spring i in the manner hereinbefore described, a rod k^{13}, connected with the slide-valve k^{11}, arranged in the steam-chest k^8 of the cylinder k, is actuated by the core of the solenoid 11, drawn into the same. By this movement of the rod k^{13} the slide-valve k^{11} is shifted from right to left in Fig. 5, thus closing the steam-inlet port k^9 and at the same time uncovering the steam-inlet port k^{10}, as well as connecting the exhaust-port k^{12} with the port k^9. The steam in front of the piston k^6 is thus permitted to escape to the open air, and live steam by entering the cylinder k through the port k^{10} drives the same from right to left in Fig. 5, by which movement the lever l^2 of the cut-off valve l' is shifted in a position substantially parallel to the pipe l, in which position the steam entering the steam-cylinders of the locomotive (not shown) is partially cut off from the same. By the forward movement of the piston k^6 the piston k^7 by means of the lever l^2 is shifted in the cylinder k' for a certain distance and is held in this position by the piston k^6 occupying its operative position. As shown in Fig. 6, the valve l' by means of an extension m^2 is directly coupled to the valve m', arranged in a pipe m, through which compressed air is forced from a pump of the engine (not shown) to the different air-brake cylinders arranged below the floor of the cars. (Not shown.) By the actuation of the valve m' the air-pressure in the pipe m is lowered, which lowering of the pressure permits the actuation of the air-brakes to an extent sufficient to retard the speed of travel of the train. Thus the valve l for the steam and air-valve m' for the compressed air operate in perfect unison. When the solenoid 12 is energized by the closing of the circuit of the battery 10 by the contact-spring i', the rod k^{13} shifts the slide-valve k^{14} over the inlet-port k^9 of the cylinder k' and uncovers the inlet-port k^{10} and connects the exhaust-port k^{12} with the port k^9 of this cylinder. The piston k^7 is now permitted to complete its movement from right to left in Fig. 5, by which movement the piston-rod k^5 and link l^3 shift the lever l^2 from the position parallel to the pipe l into a position similar, but oppositely arranged to the position shown in Fig. 5. In this position the lever l^2 has been moved forward without actuating the piston k^6 by sliding idly in the slot l^5, arranged in the link l^4, connected with the piston-rod k^4 of the piston k^6. By the further actuation of the valves l' and m' the steam is completely cut off and prevented from entering the cylinders of the locomotive, (not shown,) and by the exit of the compressed air from the pipe m the air-brakes are instantly and fully applied, which brings the train to a speedy standstill.

In order to start the train, it is only necessary to manually return the slide-valves k^{11} and k^{14} to their normal position. (Shown in Fig. 5.) This is accomplished by the following preferred mechanism: Each of the rods k^{13} of the slide-valves k^{11} and k^{14} are provided with a head k^{15}, which are engaged, respec-

tively, by a bell-crank lever k^{16} and a hand-lever k^{17}, connected with each other by a link k^{18} and arm k^{19}. The hand-lever k^{17} and bell-crank lever k^{16} are pivotally secured in the point k^{20} to any suitable fixed portion of the locomotive (not shown) and are actuated by the forward movement of the slide-valve k^{11}. When the hand-lever k^{17} is moved to the normal position, (shown in Fig. 5,) its movement is transmitted to the bell-crank lever k^{16}, and both slide-valves k^{11} and k^{14} are thus shifted back to their normal position, uncovering in their movement the inlet-ports k^9 and permitting the steam by entering the cylinders k and k' through the ports k^9 to shift the pistons k^6 and k^7 to their normal inoperative position. By this movement the lever l^2 is actuated and opens the valves l' and m', and steam is again permitted to enter the cylinders of the locomotive, and the air-cylinders of the coaches are recharged with compressed air. However, the steam is only completely cut off and the air-brakes fully applied when the engineer fails to do his duty. At all other times the same is enabled to prevent such actuation, as will be presently more fully described. In order to record such failure of duty on the part of the engineer and to state the exact time of the occurrence of the same, the following preferred mechanism is employed: In any suitable part of the cab of the locomotive (not shown) or outside thereof and inaccessible to the engineer or other unauthorized persons is arranged a drum o, covered with a layer of yielding material, preferably felt o', which serves as a support for a sheet of paper o^2, folded over the layer of felt and removably secured thereto. As shown in Fig. 7, the paper o^2 by means of a spiral line o^3 is divided in the present instance into twelve sections representing twelve hours, and the hours by longituidnal lines o^4 are subdivided into sections, each representing, for instance, five minutes. The drum o is supported by a shaft p, carried by standards p', secured to a bed-plate p^2, and is held in a slidable position on the same by a key p^3, engaging a keyway arranged in the drum. The shaft p is directly connected to the shaft r of the hour-pointer of a common alarm-clock r' and is thus rotated by the same with the proper speed. At one side of the drum o are arranged in close proximity to each other two perforators or hammers s and s', which are actuated by the electromagnets 13 and 14, when the disk g, carrying the visual signals, is actuated, closing electric circuits in the manner described, first through the electromagnet 13 and then through the electromagnet 14. The perforator s is thus actuated by the electromagnet 13 at each time the caution-signal is displayed by the wayside signal a, as well as by the visual signal, and the perforator s' by the electromagnet 14 when the danger-signal is shown by the same. By the energization of these magnets 13 and 14 their respective perforators are forced against the drum o and perforate the paper o^2 with their pointed ends s^2, thus recording each actuation of the visual signal. In order to also record the time of the actuation of the visual signal, the drum o is not alone rotated, but also shifted longitudinal on the shaft p by the following preferred mechanism: The drum o is provided with a tubular extension o^5, provided with a spiral groove o^6, conforming in pitch to the spiral line o^3, which is engaged by a bolt o^7, carried by a standard o^8. When the drum o is rotated by the shaft p and clock r', the same by means of the spiral groove o^6 and bolt o^7 is shifted from right to left in Fig. 7 with a speed proportionally to the speed of rotation thereof, thus holding the perforators s and s' in a space formed by the spiral line o^3 and always presenting an unperforated portion of the paper o^2 to the same. After the drum o has reached the end of its travel on the shaft p the same can be readily shifted to its normal position by withdrawing the bolt o^7 from the spiral groove o^6. A spring o^9, secured to the bolt o^7, tends to hold the same in engagement with the groove o^6. In order to prevent any tampering with the recording mechanism, the same is preferably inclosed in a casing (not shown) which can be opened only by the proper person, who in this instance also attends to the shifting of the drum o to its normal position to the winding of the clock r' by means of the winder r^2 and to the removal and replacing of the sheet of paper o^2.

At the same time the automatic steam and compressed-air controlling mechanism, as well as the recording mechanism, is actuated by the visual signal. The alarm-bell 15 is also sounded as the same is interposed in each of the circuits of the battery 10, closed by the contact-springs i and i' of the disk g. Thus an audible signal is sounded at each display of the caution and danger signals. In the circuits so formed may be interposed any number of alarm-bells, one of which, for instance, may be placed near the fireman's stand in the engine and another one in a coach of a train generally occupied by the conductor.

In order to enable the engineer to manually bring the train to a standstill at the display of the danger-signal by the wayside signals, and thus to indicate that the same attended to its duties, the disk g of the visual signal after having displayed the caution-signal can automatically be returned to its normal position in the following preferred manner: As shown in Fig. 4, the friction-disk f^5 of the shaft f^3 by moving the same toward the housing h is disengaged from the depression f^6 in the gear-wheel f^2, thus permitting the spring f^4 to return the disk g to its normal position. The spring f^4, which is connected

with one end to the friction-disk f^5 and with its other end to the standard f^7, is wound up when the disk g is rotated. By the above-described mechanism and arrangement of parts an absolute safeguard is formed, which permits only a slight advance of a train beyond the danger-signal in case the engineer does not attend to his duties either through incapacity or neglect. At the same time this failure on the part of the engineer and the time of its occurrence are recorded by the perforator s' of the recording mechanism, which is only actuated when the engineer does not heed the danger-signal displayed by the wayside signal a and permits the train to proceed to this signal, which causes an actuation of the visual signal in the train, and consequently an automatic stopping of the same and a recording of this fact. At the same time the perforator s, which has previously and shortly before recorded the display of the caution-signal, is in this instance a positive proof of the proper working of the visual signal, as the perforation made in the paper o^2 of the recording-drum o by the perforator s' will appear a slight distance in advance of the perforation made by the perforator s.

In order to facilitate the return of the disk g, as well as of the slide-valves k^{11} and k^{14}, to their normal position, the lever k^{17} is preferably placed in close proximity to the projecting end of the shaft f^3 of the visual signal, thus permitting the actuation of both with one hand.

Having thus described the nature and objects of my invention, what I claim as new, and desire to secure by Letters Patent, is—

1. In a railway signaling system, means adapted to actuate wayside signals, a visual signal carried by the train adapted to be operated by the wayside-signal-actuating means, and means carried by the train and controlled by the actuation of said visual signal adapted first to retard and then to stop the train.

2. In a railway signaling system, means adapted to actuate wayside signals, a visual and audible signal carried by the train adapted to be operated by the wayside-signal-actuating means, means carried by the train and controlled by the actuation of said visual signal adapted first to retard and then to stop the train, and means controlled by said visual signal adapted to record such retarding and stopping of the train.

3. In a railway signaling system, means adapted to actuate wayside signals, a visual and audible signal carried by the train adapted to be operated by the wayside-signal-actuating means, means carried by the train and controlled by the actuation of said visual signal adapted first to retard and then to stop the train, and to state the time of its occurrence.

4. In a railway signaling system, a visual and audible signal, an automatic train retarding and stopping mechanism and a recording mechanism of such retarding and stopping of the train, carried by the train, and means arranged adjacent to a rail adapted to actuate said visual signal and by the same, said train retarding and stopping mechanism and said recording mechanism.

5. In a railway signaling system, a visual and audible signal, an automatic train retarding and stopping mechanism and a recording mechanism of such retarding and stopping of the train carried by the train, and means arranged adjacent to a rail adapted to actuate said visual signal and by the same said train retarding and stopping mechanism and said recording mechanism, and by the latter to state the time at which such retarding and stopping of the train occurred.

6. In a railway signaling system, an obstruction arranged adjacent to the rail, means adapted to normally hold said obstruction in a raised or operative position, a visual signal, an automatic train retarding and stopping mechanism, and a recording mechanism of such retarding and stopping operatively connected with each other carried by the train, and said visual signal arranged to be operated by said obstruction and to control the actuation of said retarding and stopping mechanism and said recording mechanism when occupying a certain position.

7. In a railway signaling system, a block arranged adjacent to the rail, a wheel arranged in the path of said block, a disk operatively connected with said wheel having varied colored signals, an automatic train-retarding and stopping mechanism and a recording mechanism of the retarding and stopping operatively connected with each other and with said disk and arranged to be actuated by the same when the disk occupies a certain position imparted to the same by said block and wheel.

8. In a railway signaling system, blocks arranged adjacent to the rail, a wheel arranged in the path of said blocks, a disk carrying signals operatively connected with said wheel, an automatic train retarding and stopping mechanism, a recording mechanism of the retarding and stopping, and an audible signal operatively connected with each other and with said disk and arranged to be successively and simultaneously actuated by the same when said disk occupies certain positions imparted to the same by said blocks and said wheel.

9. In a railway signaling system, an obstruction arranged adjacent to the rail, a disk having signals, an automatic train retarding and stopping mechanism having a cylinder, a piston arranged therein, means adapted to conduct a motive fluid into said cylinder to actuate said piston, and a valve

operatively connected with said piston and adapted to be partially actuated by the same and said piston when actuated, arranged to permit of the complete actuation of said valve.

10. In a railway signaling system, an obstruction arranged adjacent to the rail, a disk having signals, an automatic train retarding and stopping mechanism controlled by said disk having cylinders, pistons arranged in said cylinders, a steam-supply pipe having a throttle-valve, said pipe adapted to conduct steam into said cylinders to hold said pistons in a normal inoperative position therein, means adapted to connect said throttle-valve with said pistons, valves connected with said cylinders controlled by said disk and adapted when actuated to permit of the shifting of said pistons by the steam and by the same of the actuation of said throttle-valve.

11. In a railway signaling system, obstructions arranged adjacent to the rail, a disk having signals adapted to be actuated by said obstructions, an automatic train retarding and stopping mechanism having cylinders, pistons arranged therein and valves connected with the same, a steam supply-pipe adapted to conduct steam into said cylinders to actuate said pistons, and a valve arranged in said supply-pipe operatively connected with said pistons, and means for each of said cylinder-valves and arranged when said disk occupies certain positions to successively actuate said cylinder-valves to permit of first the partial and then of the complete actuation of said steam-valve by said pistons.

12. In a railway signaling system, obstructions arranged adjacent to the rail, a disk having signals adapted to be actuated by said obstructions, an automatic train retarding and stopping mechanism consisting of cylinders having pistons and slide-valves, a steam-supply pipe adapted to conduct steam into said cylinders, said pipe having a valve, means adapted to connect the valve of said steam-supply pipe with each of said pistons, and actuating means for each of said slide-valves adapted to permit of the successive actuation of said pistons and by the same, of a partial and then of a complete closing of the valve of said steam-pipe.

13. In a railway signaling system, an obstruction arranged adjacent to the rail, a disk having signals, an automatic train retarding and stopping mechanism having a cylinder, a piston arranged therein, means adapted to conduct a motive fluid into said cylinder to actuate said piston and steam and compressed-air-controlling means operatively connected with said piston and arranged to be partially closed by said piston and to be completely closed independent thereof.

14. In a railway signaling system, obstructions arranged adjacent to the rail, a disk having signals actuated by said obstructions, an automatic train retarding and stopping mechanism having cylinders, pistons arranged therein, means having a throttle-valve adapted to conduct steam into said cylinders to actuate said piston and by the same said throttle-valve and a relief-valve for compressed air actuated by said throttle-valve.

15. In a railway signaling system, obstructions arranged adjacent to the rail, a disk having signals actuated by said obstructions, an automatic train retarding and stopping mechanism having cylinders, pistons arranged therein, means having a throttle-valve adapted to conduct steam into said cylinders to actuate said piston and by the same said throttle-valve, a relief-valve for compressed air actuated by said throttle-valve, and means controlled by said disk adapted to permit of the successive entrance of steam into said cylinders to successively actuate said pistons.

16. In a railway signaling system, obstructions arranged adjacent to the rail, a disk having signals actuated by said obstructions, an automatic train retarding and stopping mechanism having cylinders, pistons arranged therein, a pipe having a throttle-valve adapted to conduct steam into said cylinders to actuate said pistons and by the same said throttle-valve, a relief-valve for compressed air actuated by said throttle-valve and valves controlled by said disk and adapted to permit of the successive entrance of steam into said cylinders to successively actuate said pistons.

17. In a railway signaling system, obstructions arranged adjacent to the rail, a disk having signals actuated by said obstructions, an automatic train retarding and stopping mechanism having cylinders, pistons arranged therein, a pipe having a throttle-valve adapted to conduct steam into said cylinders to actuate said pistons and by the same said throttle-valve, a relief-valve for compressed air actuated by said throttle-valve, valves adapted to permit of the entrance of steam into said cylinders to actuate said pistons, and means controlled by said disk adapted to actuate said steam-entrance valves to permit of the successive entrance of steam into said cylinders.

18. In a railway signaling system, obstructions arranged adjacent to the rail, a disk having signals actuated by said obstructions, an automatic train retarding and stopping mechanism having cylinders, pistons arranged therein, a pipe having a throttle-valve adapted to conduct steam into said cylinders to actuate said pistons and by the same said throttle-valve, a relief-valve for compressed air actuated by said throttle-valve, valves adapted to permit of the entrance of steam into said cylinders to actuate said pistons, means controlled by said disk adapted to automatically actuate said steam-entrance

valves, and means adapted to permit of the manual actuation of said entrance-valves.

19. In a railway signaling system, obstructions arranged adjacent to the rail, a disk having signals actuated by said obstructions, an automatic train retarding and stopping mechanism having cylinders, pistons arranged therein, a pipe having a throttle-valve adapted to conduct steam into said cylinders to actuate said pistons and by the same said throttle-valve, a relief-valve for compressed air actuated by said throttle-valve, valves adapted to permit of the entrance of steam into said cylinders to actuate said pistons, and solenoids controlled by said disk and connected with said steam-entrance valves adapted when energized to actuate the same.

20. In a railway signaling system, obstructions arranged adjacent to the rail, a disk having signals actuated by said obstructions, an automatic train retarding and stopping mechanism having cylinders, pistons arranged therein, a pipe having a throttle-valve adapted to conduct steam into said cylinders to actuate said pistons and by the same said throttle-valve, a relief-valve for compressed air actuated by said throttle-valve, valves adapted to permit of the entrance of steam into said cylinders to actuate said pistons, and solenoids controlled by said disk and connected with said steam-entrance valves adapted when energized to actuate the same, and means adapted to permit of manual actuation of said entrance-valves.

21. In a railway signaling system, an obstruction arranged adjacent to the rail, a disk having signals, an automatic train retarding and stopping mechanism having a cylinder, a piston arranged therein, means adapted to conduct a motive fluid into said cylinder to actuate said piston, steam and compressed air controlling means operatively connected with said piston, and a recording mechanism having means adapted to record the actuation of said piston.

22. In a railway signaling system, an obstruction arranged adjacent to the rail, a disk having signals, an automatic train retarding and stopping mechanism having a cylinder, a piston arranged therein, means adapted to conduct a motive fluid into said cylinder to actuate said piston, steam and compressed air controlling means operatively connected with said piston, and a recording mechanism having means adapted to record the actuation of said piston and to state the time of such actuation.

23. In a railway signaling system, obstructions arranged adjacent to the rail, a disk having signals actuated by said obstructions, an automatic train retarding and stopping mechanism having cylinders, pistons arranged therein, means adapted to conduct a motive fluid into said cylinders to actuate said pistons, steam and compressed-air controlling means operatively connected with said pistons and a recording mechanism having a drum adapted to record the actuation of said signal-disk and said pistons.

24. In a railway signaling system, obstructions arranged adjacent to the rail, a disk having signals actuated by said obstructions, an automatic train retarding and stopping mechanism having cylinders, pistons arranged therein, means adapted to conduct a motive fluid into said cylinders to actuate said pistons, steam and compressed-air controlling means operatively connected with said pistons, a recording mechanism having a drum adapted to record the actuation of said signal-disk and said pistons, and means adapted to actuate said drum.

25. In a railway signaling system, obstructions arranged adjacent to the rail, a disk having signals actuated by said obstructions, an automatic train retarding and stopping mechanism having cylinders, pistons arranged therein, means adapted to conduct a motive fluid into said cylinders to actuate said pistons, steam and compressed-air controlling means operatively connected with said pistons, a recording mechanism having a drum, means adapted to actuate said drum and means controlled by said disk adapted to form an impression in said drum at each actuation of said disk and pistons.

26. In a railway signaling system, obstructions arranged adjacent to the rail, a disk having signals actuated by said obstructions, an automatic train retarding and stopping mechanism having cylinders, pistons arranged therein, means adapted to conduct a motive fluid into said cylinders to actuate said pistons, steam and compressed-air controlling means operatively connected with said pistons, a recording mechanism having a drum, a cover surrounding said drum having divisions each representing certain fractions of time, means adapted to rotate and to shift said drum, and means controlled by said disk adapted to form an impression in said cover at each actuation of said disk and pistons.

27. In a railway signaling system, obstructions arranged adjacent to the rail, a disk having signals actuated by said obstructions, an automatic train retarding and stopping mechanism having cylinders, pistons arranged therein, means adapted to conduct a motive fluid into said cylinders to actuate said pistons, steam and compressed-air controlling means operatively connected with said pistons, a recording mechanism having a drum, means adapted to rotate and to shift said drum with a predetermined speed, a cover surrounding said drum having divisions each representing a certain fraction of time, and perforators controlled by said disk and adapted to form an impression in said cover at each actuation of said disk and pistons.

28. In a railway signaling system, obstructions arranged adjacent to the rail, a disk having signals actuated by said obstructions, an automatic train retarding and stopping mechanism having cylinders, pistons arranged therein, a steam-supply pipe having a throttle-valve adapted to conduct steam into said cylinders to actuate said throttle-valve a relief-valve for compressed air actuated by said throttle-valve, slide-valves connected with said cylinders adapted to control the entrance of steam into the same, solenoids controlled by said disk adapted to actuate said slide-valves, a rotating and sliding drum having divisions representing fractions of time and perforators controlled by said disk and adapted to record the actuation of each of said pistons.

29. In a railway signaling system, obstructions arranged adjacent to the rail, a disk having signals actuated by said obstructions, an automatic train retarding and stopping mechanism having cylinders, pistons arranged therein, a steam-supply pipe having a throttle-valve adapted to conduct steam into said cylinders to actuate said throttle-valve, a relief-valve for compressed air actuated by said throttle-valve, slide-valves connected with said cylinders adapted to control the entrance of steam into the same, solenoids controlled by said disk adapted to actuate said slide-valves, a rotating and sliding drum having divisions representing fractions of time and perforators controlled by said disk and adapted to record the actuation of each of said pistons, and means adapted to permit of the manual return of said slide-valves and disk to their normal positions.

30. In a railway signaling system, obstructions arranged adjacent to the rail, a disk having signals actuated by said obstructions, an automatic train retarding and stopping mechanism having cylinders, pistons arranged therein, a steam-supply pipe having a throttle-valve adapted to conduct steam into said cylinders to actuate said throttle-valve, a relief-valve for compressed air actuated by said throttle-valve, slide-valves connected with said cylinders adapted to control the entrance of steam into the same, solenoids controlled by said disk adapted to actuate said slide-valves, a rotating and sliding drum having divisions representing fractions of time and perforators controlled by said disk and adapted to record the actuation of each of said pistons, and an alarm-bell forming an audible signal, adapted to be actutated by said disk.

31. In a railway signaling system, an automatic train retarding and stopping mechanism comprising a cylinder having a piston, a steam-supply pipe having a throttle-valve operatively connected with said piston, said pipe adapted to supply steam to said cylinder to actuate said piston and by the same said throttle-valve to partially cut off the steam through said pipe, a valve connected with said cylinder having a rod, and automatic and manually-actuated means adapted to actuate said rod and by the same said cylinder-valve to control the entrance of steam into said cylinder.

32. In a railway signaling system, an automatic train retarding and stopping mechanism comprising a cylinder having a piston, a steam-supply pipe having a throttle-valve operatively connected with said piston, said pipe adapted to supply steam to said cylinder to actuate said piston and by the same said throttle-valve to partially cut off the steam through said pipe, a pipe for compressed air having a valve operatively connected with said throttle-valve and adapted when actuated by the same to reduce the pressure of air in said air-pipe.

33. In a railway signaling system, an automatic train retarding and stopping mechanism comprising cylinders, each having a piston, a steam-supply pipe in constant communication with said cylinders adapted to conduct steam into each of said cylinders, a throttle-valve arranged in said steam-supply pipe operatively connected with said pistons and successively actuated by the same to first partially and then completely stop the passage of steam therethrough, a pipe for compressed air having a valve actuated by said throttle-valve and adapted to first partially and then completely reduce the pressure of air in said air-pipe, a slide-valve arranged in each of said cylinders having a rod, a solenoid connected with each of said rods and adapted when energized to move its respective slide-valve in one direction to change the entrance of steam into its respective cylinder and means engaging said rods adapted to permit of the manual return of said valves to their normal position in said cylinders.

34. In a railway signaling system, a visual signal, a recording mechanism adapted to record varying positions of said visual signal comprising a drum, means adapted to rotate and to shift said drum with a predetermined speed, and means adapted to be brought into engagement with said drum when said disk assumes certain fixed positions.

35. In a railway signaling system, a recording mechanism comprising a drum having an extension, a spiral groove arranged in said extension, a shaft adapted to loosely support and rotate said drum, means engaging said spiral groove adapted in conjunction with the same to shift said drum on said shaft when rotated by the same, and perforators adapted when actuated to successively engage said drum and make an impression on the same.

36. In a railway signaling system, a recording mechanism comprising a drum, a cover removably surrounding the same, a tu-

bular extension projecting from said drum having a spiral groove, a shaft adapted to loosely support and to rotate said drum, a bolt engaging said spiral groove adapted in conjunction with the same to shift said drum longitudinally on said shaft when rotated by the same, perforators adapted when actuated to successively engage said drum and to perforate said cover, and means adapted to actuate said perforators.

37. In a railway signaling system, a recording mechanism, comprising a drum, a cover removably surrounding the same having divisions representing certain fractions of time, a tubular extension projecting from said drum having a spiral groove, a shaft adapted to loosely support and to rotate said drum, means adapted to rotate said shaft and by the same said drum with a predetermined speed, a bolt engaging said spiral groove adapted in conjunction with the same to shift said drum longitudinally on said shaft with a predetermined speed when rotated by the same, perforators arranged adjacent to said drum adapted to perforate said cover and by said perforations and cover to state the time of the actuation of said perforators, and means adapted to actuate said perforators.

38. In a railway signaling system, a recording mechanism comprising a drum, yielding material surrounding said drum, a cover removably connected with said yielding material having a spiral line dividing said cover into sections representing hours and longitudinal parallel lines subdividing the spiral line representing in conjunction therewith fractions of hours, a tubular extension projecting from said drum having a spiral groove, a shaft adapted to loosely support said drum, a bolt removably engaging said spiral groove of said extension, a clock adapted to rotate said shaft and by the same said drum and by said bolt and groove to simultaneously shift said drum longitudinally on said shaft with a predetermined speed, perforators arranged side by side and adjacent to said drum adapted to perforate said cover and by said divisions on said cover to state the time of the actuation of said perforators, and means adapted to actuate said perforators.

In testimony whereof I have hereunto set my signature in the presence of two subscribing witnesses.

BENJAMIN F. SAURMAN.

Witnesses:
J. WALTER DOUGLASS,
THOMAS M. SMITH.