No. 824,425. PATENTED JUNE 26, 1906.

C. H. JOHNSON.

GOVERNOR FOR FLUID PRESSURE MOTORS.

APPLICATION FILED JULY 24, 1902.

Fig. 1.

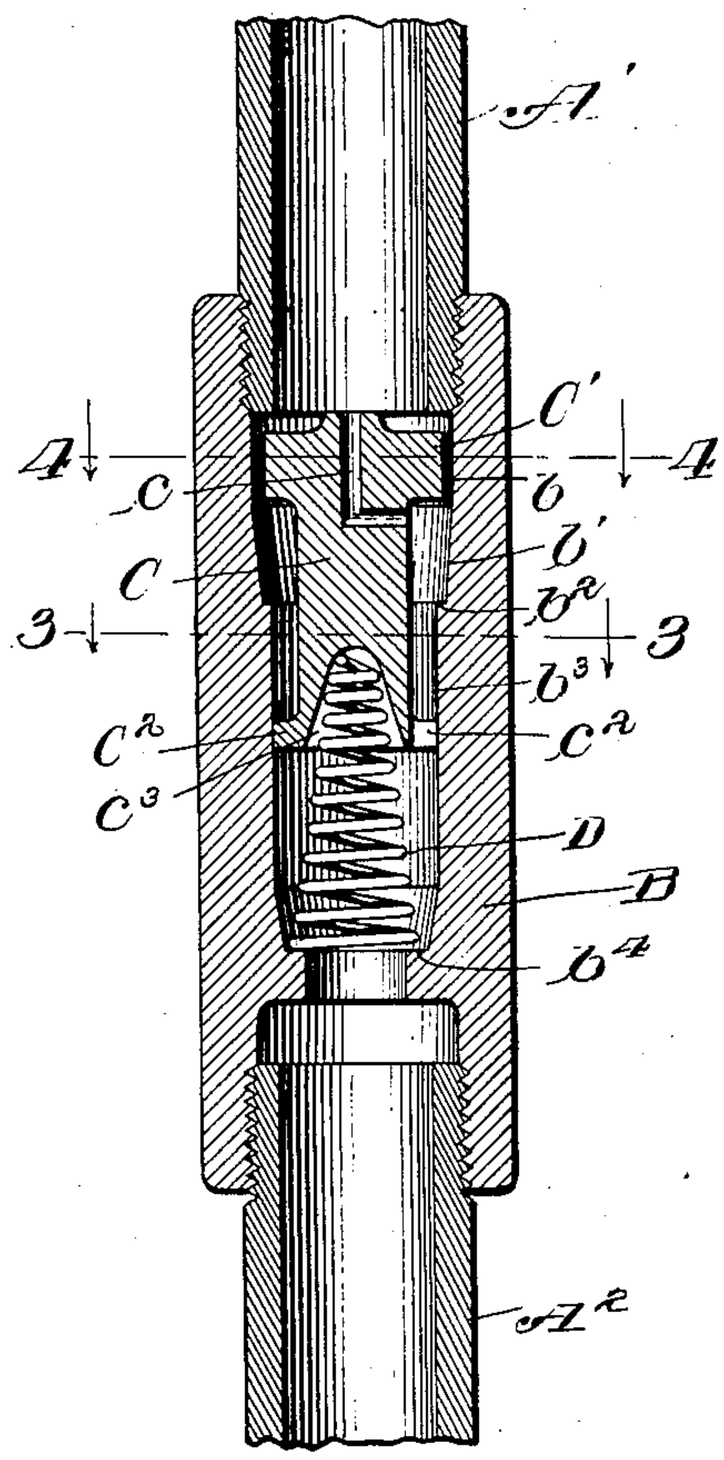

Fig. 2.

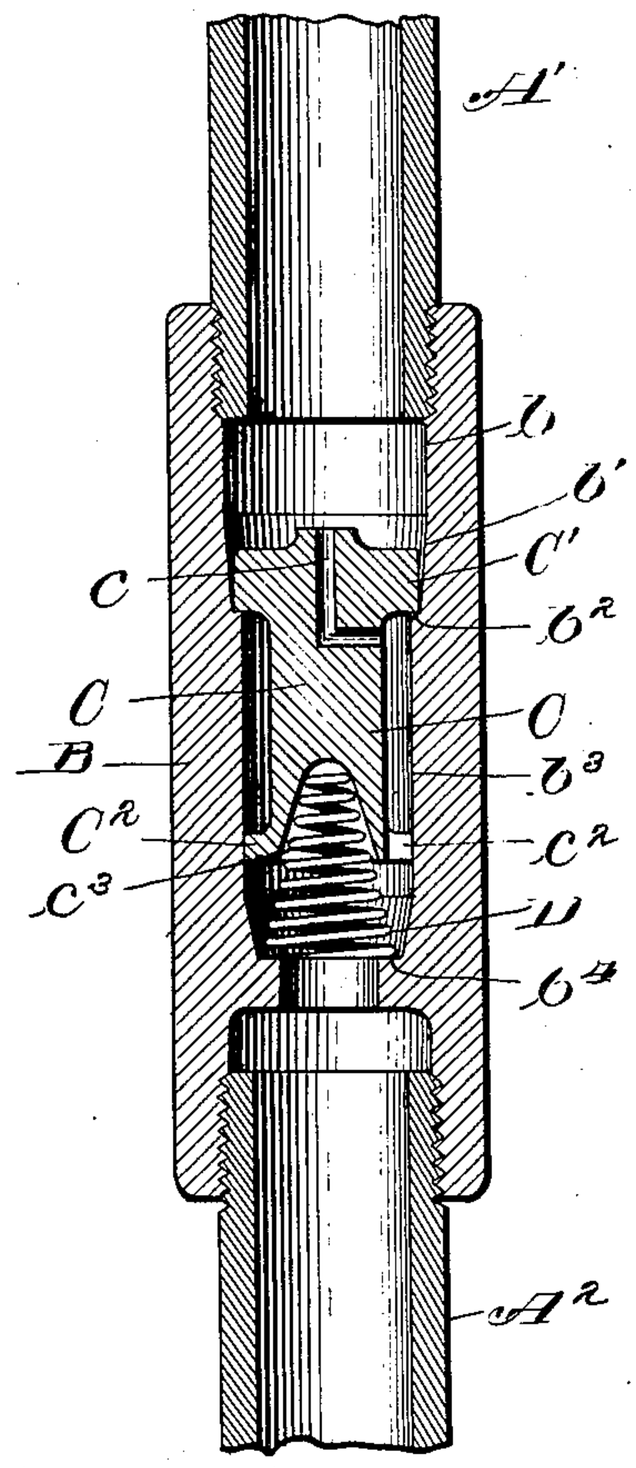

Fig. 3.

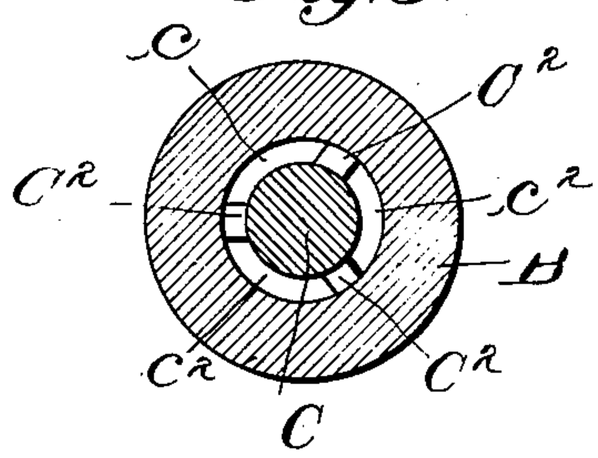

Fig. 4.

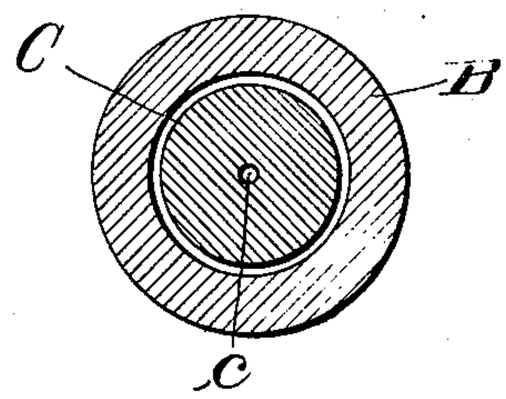

Witnesses:

H. S. Gaither

C. C. Cunningham

Inventor:

Charles H. Johnson

by Kamselin & Wilkinson

Attorneys.

UNITED STATES PATENT OFFICE.

CHARLES H. JOHNSON, OF CHICAGO HEIGHTS, ILLINOIS.

GOVERNOR FOR FLUID-PRESSURE MOTORS.

No. 824,425. Specification of Letters Patent. Patented June 26, 1906.

Application filed July 24, 1902. Serial No. 116,834.

To all whom it may concern:

Be it known that I, CHARLES H. JOHNSON, a citizen of the United States, residing at Chicago Heights, county of Cook, State of Illinois, have invented a certain new and useful Improvement in Governors for Fluid-Pressure Motors; and I declare the following to be a full, clear, and exact description of the invention, such as will enable others skilled in the art to which it pertains to make and use the same, reference being had to the accompanying drawings, which form a part of this specification.

My invention relates in general to fluid-pressure regulators, and more particularly to governors for controlling the flow of motive fluid to a pneumatic drill or other fluid-pressure-operated engine.

The quantity of motive fluid which passes through an engine when the throttle-valve is open is proportionate to the rapidity of movement of the piston, which in turn varies in speed according to the resistance offered to the movement thereof. When, therefore, the resistance decreases, the speed of the piston increases, and consequently the amount of motive fluid which passes through the engine increases. It is desirable to diminish the flow of motive fluid to the cylinder of an engine when the load decreases in order to avoid the waste of motive fluid and more particularly to obviate the racing or running away of the engine and the consequent wear and tear thereon. In the use of pneumatic drills, for instance, when the drill is out of contact with the object worked upon the speed of the piston is at once greatly accelerated, thereby subjecting the drill to unnecessary wear and increasing the consumption of the motive fluid unless the flow of motive fluid is restricted.

The object of my invention is to provide a governor for automatically regulating the flow of motive fluid to an engine according to the rapidity of the movement of the piston.

A further object of my invention is to provide a governor for automatically varying the quantity of motive fluid passing to an engine in inverse proportion to the quantity of fluid consumed by the engine.

A still further object of my invention is to provide a governor for fluid-pressure-operated engines which will be simple in construction, inexpensive in manufacture, and efficient in operation.

The embodiment of my invention disclosed herein, generally described, consists in a chamber having a tapered wall of circular cross-section, a piston-valve located within the chamber between the periphery of which and the tapered wall of the chamber the motive fluid passes to the engine, the piston-valve being exposed on one side to motive fluid flowing from the source thereof and on its under side to motive fluid passing to the engine.

My invention will be more fully described hereinafter with reference to the accompanying drawings, in which the same is illustrated as embodied in a convenient and practical form, and in which—

Figure 1 is a central longitudinal section through my invention, showing the piston-valve in position to afford a maximum flow of pressure; Fig. 2, a view similar to Fig. 1, showing the piston-valve in position to afford a minimum flow of fluid-pressure; Fig. 3, a sectional view on line 3 3, Fig. 1; and Fig. 4 a sectional view on line 4 4, Fig. 1.

Similar reference characters are used to indicate similar parts in the several figures of the drawings.

Reference character A′ indicates a portion of a conduit leading from a source of motive fluid—as, for instance, a reservoir of compressed air.

Reference character A^2 indicates the portion of the conduit leading to an engine, such, for instance, as a pneumatic drill or to a point where fluid-pressure is used for other purposes.

Interposed between the ends of the sections A′ and A^2 of the conduit is a governor comprising a casing B, within which is located a piston-valve C. The opposite ends of the governor-casing are preferably interiorly screw-threaded to be engaged by the screw-threaded ends of the conduit-sections A′ and A^2.

The casing of the governor is provided with a chamber therethrough forming a passageway through which the fluid-pressure passes from the conduit-section A′ to the section A^2. The portion of the chamber in the casing adjacent to the end of the conduit-section A′ is cylindrical, as shown at *b*, while the bore of the chamber below the cylindrical portion *b* is tapered slightly, as indicated at *b′*, terminating in an annular shoulder b^2. A second annular shoulder b^4 is provided near the end of the casing B, adjacent to the conduit A^2. The chamber within the casing below the

shoulder b^2 is cylindrical, as indicated at b^3, to a point adjacent to the annular shoulder b^4.

The piston-valve C comprises an enlarged end C′ of circular cross-section, of a diameter slightly less than the diameter of the cylindrical portion b of the chamber. A restricted passage c extends from the outer surface of the enlarged portion C′ of the piston-valve to the surface of the valve at a point between the enlarged portion C′ and the opposite end thereof. The end of the valve opposite to the enlarged portion C′ is provided with wings C^2, which closely engage the interior surface of the cylinderical portion b^3 of the chamber within the valve-casing. Passages c^2 are located between the wings C^2 and afford passage-ways for the fluid-pressure to pass to the section A^2 of the conduit. The end of the valve at which the wings C^2 are located is provided with a recess c^3, within which is seated the end of a conical spring D. The opposite end of the spring D rests against the annular shoulder b^4, formed near the end of the casing B adjacent to the section A^2 of the conduit. The governor is ordinarily located at a point between the throttle-valve and the engine; but it is obvious it may be located at any point in the conduit through which fluid-pressure passes from a source thereof to a point where it is used.

The operation of my invention is as follows: The piston-valve C is normally retained in the position indicated in Fig. 1 by means of the spring D, and when in such position affords a maximum passage-way for the flow of fluid under pressure around the periphery of the enlarged portion C′ and the interior surface of the cylindrical portion b of the valve-casing chamber. The fluid-pressure after passing around the enlarged portion C′ flows through the passages c^2 to the conduit A^2 and thence to the engine or to the point where the fluid-pressure is used for any purpose. The space between the enlarged portion C′ and the inner wall of the cylindrical portion b of the casing is sufficient to permit the flow of fluid-pressure in sufficient quantity to meet the consumption thereof by the engine under normal running conditions, that is—when the piston is subjected to the resistance afforded by the work for which the engine is designed—and consequently the opposite surfaces of the piston-valve are exposed to substantially the same pressure. When, however, the resistance to the movement of the piston in the engine is relieved and the movement thereof becomes more rapid, the amount of fluid-pressure consumed by the engine is greater than can pass the enlarged portion C′ of the piston-valve, and hence a greater pressure is exerted upon the surface of the piston-valve toward the supply of fluid-pressure than the opposing pressure exerted upon the surfaces of the piston-valve exposed to the fluid-pressure which has passed the enlarged portion C′. The preponderance of pressure, therefore, on the side of the piston-valve toward the source of fluid-pressure moves the valve toward the section A^2 of the conduit. This movement of the piston-valve restricts the passage-way around the enlarged portion C′ thereof owing to the latter occupying a position within the tapered portion b' of the chamber in the valve-casing. The movement of the enlarged portion of the piston-valve toward the annular seat b^2 gradually restricts the passage-way around the piston-valve owing to the tapered interior wall b'. If the consumption of fluid-pressure is such that the preponderance of pressure exerted on the end of the enlarged portion C′ of the valve is sufficient to compress the conical spring D′ the amount indicated in Fig. 2, the inner radial surface of the enlarged portion C′ will engage the annular shoulder b^2, thereby cutting off all passage of fluid-pressure between the interior wall of the chamber and the periphery of the enlarged portion C′ and restricting the flow of fluid-pressure passing the piston-valve to the limited passage-way afforded by the passage c. Sufficient fluid-pressure can pass through the passage c to continue the movement of the piston in the engine during the interval that the load is discontinued. When the load is again assumed by the engine—as, for instance, in the case of a pneumatic drill when the drill is again in contact with the surface worked upon—the movement of the piston is impeded and its speed diminished, so that the pressure builds up between the engine and the governor sufficiently to augment the tension of the spring D and move the piston-valve from the position shown in Fig. 2 to its normal position indicated in Fig. 1. The tension of the conical spring D increases as it is compressed, and consequently when it is in the condition shown in Fig. 2 it exerts greater force to move the piston-valve to a position where it will open the passage-way between the enlarged portion C′ thereof and the surrounding wall of the chamber than it exerts against the reverse movement of the piston-valve—namely, from the position indicated in Fig. 1 to that in Fig. 2.

From the foregoing description it will be observed that I have invented a governor for controlling the passage of fluid under pressure which automatically regulates the size of the passage-way through which the fluid under pressure passes from a source thereof in inverse proportion to the consumption of the fluid-pressure at the point where it is used, thereby avoiding the racing or running away of the drill or other fluid-pressure-operated apparatus and the consequent wear and tear thereof.

While I have described more or less precisely the details of construction, I do not wish to be understood as limiting myself thereto, as I contemplate changes in form,

the proportion of parts, and the substitution of equivalents, as circumstances may suggest or render expedient without departing from the spirit of my invention.

Having now fully described my invention, what I claim as new, and desire to secure by Letters Patent, is—

1. In a governor for fluids, the combination with a chamber having a tapered interior wall, a cylindrical chamber communicating with said first chamber, a piston-valve having a head located within said first chamber and forming a passage-way for the fluid between the periphery thereof and the tapered wall of the chamber, a radial flange on the opposite end of said valve located within and closely engaging the interior wall of said cylindrical chamber, and a spring normally maintaining the valve in position to afford a maximum passage-way for the fluid.

2. The combination with a conduit leading from a source of motive fluid to an engine, of a governor located in said conduit comprising a chamber having a tapered interior wall of circular cross-section and a piston-valve located within said chamber and forming a passage-way for fluid-pressure between the periphery thereof and the tapered wall of the chamber, one surface of said valve being exposed to pressure flowing from the source thereof and the other surface being exposed to pressure flowing to the engine and a spring normally maintaining said valve in position to afford a maximum passage-way for the fluid.

3. In a fluid-governor, the combination with a chamber having a tapered interior wall, of a cylindrical chamber communicating with said first chamber, an annular shoulder formed between said chambers, a piston-valve having a head located within said first chamber and forming a passage-way for fluid-pressure between the periphery thereof and the tapered wall of the chamber, a radial flange on the opposite end of said valve located within and closely engaging the interior wall of said cylindrical chamber, said head being of a diameter slightly greater than the diameter of said shoulder and having a passage-way extending longitudinally therethrough, and a spring normally maintaining the valve in position to afford a maximum passage-way for the fluid.

4. The combination with a conduit leading from a source of motive fluid to an engine, of a governor located in said conduit comprising a chamber having a valve-seat therein and a piston-valve located within said chamber and forming a passage-way for fluid-pressure between the periphery thereof and the interior wall of the chamber, one surface of said valve being exposed to pressure flowing from the source thereof and the other surface being exposed to pressure flowing to said engine, said piston-valve having a passage therethrough for the flow of fluid-pressure when the passage-way around the periphery of the valve is closed by the engagement of the valve with the seat in the chamber, and a spring normally maintaining the valve in position to afford a maximum passage-way through the fluid-pressure.

5. In a governor for a fluid-operated engine, the combination with a chamber having an interior tapered wall of circular cross-section, of a piston-valve located within said chamber and forming a passage-way for fluid-pressure between the periphery thereof and the tapered wall of the chamber, and a conical spring the apex of which extends into a recess in said piston-valve and the base of which engages a fixed support on the side of the valve toward the engine, whereby when the pressure on the surface of the valve toward the engine is less than the pressure on the surface thereof toward the motive-fluid supply the passage-way around the valve will be reduced.

6. The combination with a conduit leading from a source of motive fluid to a point where the fluid is used, of a governor located in said conduit comprising a chamber having a tapered interior wall of circular cross-section, a piston-valve located within said chamber and forming a passage-way for fluid-pressure between the periphery thereof and the tapered wall of the chamber, one surface of said valve being exposed to pressure flowing from the source thereof and the other surface being exposed to pressure flowing to the point of use, and a spring normally maintaining the valve in position to afford a maximum passage-way for the fluid-pressure whereby when the pressure on the surface of the valve toward the point of use is less than the pressure on the surface thereof toward the motive-fluid supply the passage-way around the valve will be reduced.

In testimony whereof I sign this specification in the presence of two witnesses.

CHARLES H. JOHNSON.

Witnesses:

GEO. L. WILKINSON,

C. C. CUNNINGHAM.