No. 820,337.

PATENTED MAY 8, 1906.

J. B. BARNES.

CAR TRUCK.

APPLICATION FILED JAN. 22, 1906.

Fig. 1.

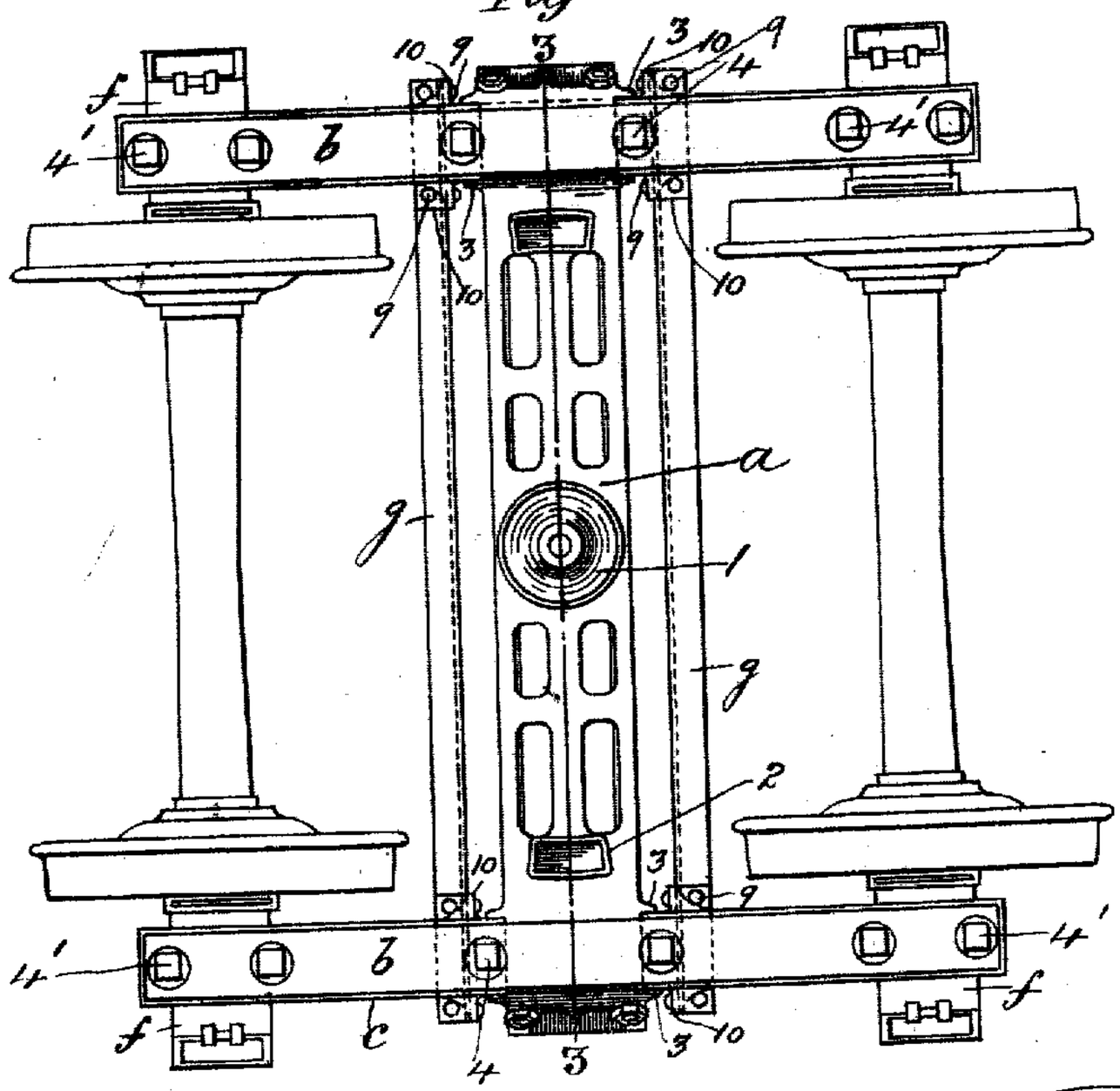

Fig. 2.

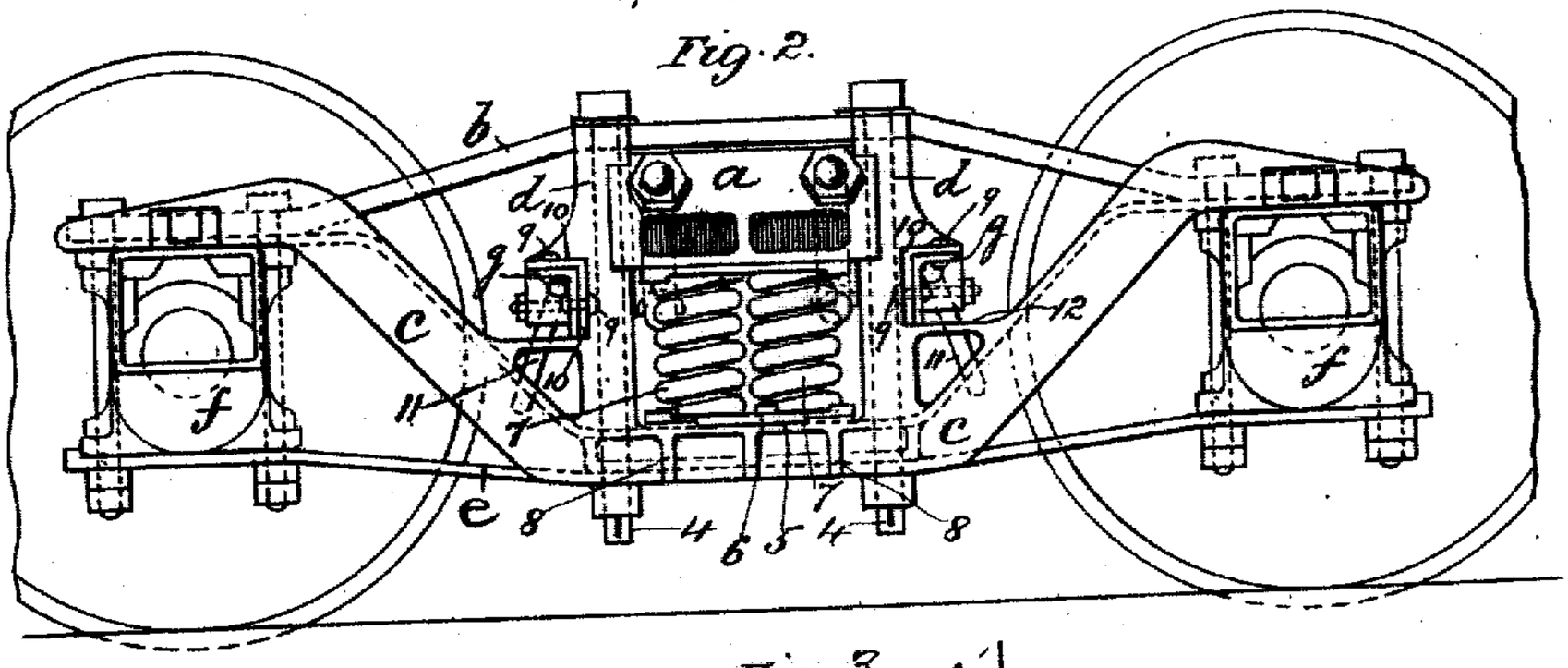

Fig. 3.

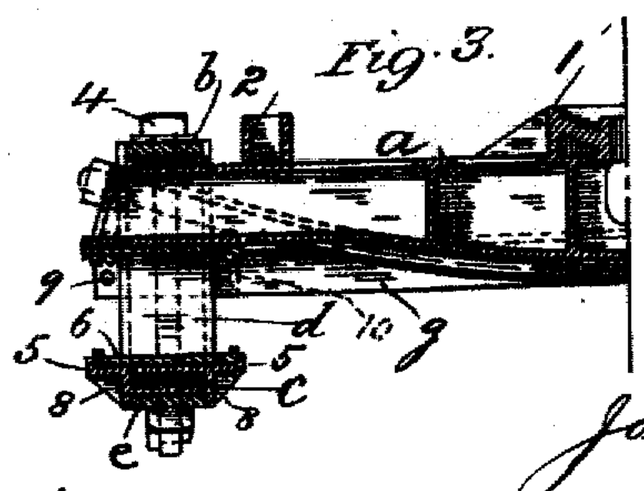

WITNESSES

J. W. Benbow.

M. D. Whitcomb

INVENTOR

Joshua B. Barnes

By Edward W. Ferrell

His Atty

UNITED STATES PATENT OFFICE.

JOSHUA B. BARNES, OF SPRINGFIELD, ILLINOIS.

CAR-TRUCK.

No. 820,337. Specification of Letters Patent. Patented May 8, 1906.

Application filed January 22, 1906. Serial No. 297,289.

To all whom it may concern:

Be it known that I, JOSHUA B. BARNES, a citizen of the United States, residing at Springfield, in the county of Sangamon and State of Illinois, have invented a new and useful Improvement in Car-Trucks, of which the following is a specification.

My invention relates particularly to a freight-car truck having a cast-steel or other truck-bolster, and has for its object to simplify the construction and to obtain a strong, light, and rigid structure.

The invention consists in features of novelty, as hereinafter described and claimed, reference being had to the accompanying drawings, forming part of this specification, whereon—

Figure 1 is a top plan view of my improved car-truck omitting the brakes and other appendages of ordinary well-known construction; Fig. 2, a side elevation thereof to enlarged scale, and Fig. 3 a vertical longitudinal section through one-half of the truck-bolster and combined side frame of the truck on line 3 3 in Fig. 1.

Like letters and numerals of reference denote like parts in all the figures.

a represents the truck-bolster, which is preferably metallic, of any suitable design, having the usual center plate 1, side bearings 2, and guide-lugs 3. Each side frame of the truck comprises the arch-bar *b*, the inverted arch-bar *c*, having the truck-columns *d* as component parts thereof, and the bottom tie-bar *e*, which are secured together by the bolts 4, the bars *b*, *c*, and *e* spanning and supporting the axle-boxes *f*, to which they are secured by the bolts 4′ in the usual manner.

In lieu of the separately-constructed bolster guide-bars or truck-columns and spring-plank with their separate attachments to the arch-bars and transoms, respectively, as ordinarily used, I make the inverted arch-bar *c*, preferably of cast-steel, having the truck-columns *d* integral therewith, the lower middle portion of the inverted arch-bar *c* having lateral flanges or extensions 5, which are flush with the top side of the bar *c* thereat and form therewith a seat 6 for the bolster-springs 7, the flanges 5 being united integrally to the preferably-cored body of the bar *c* beneath the seat 6 by ribs 8, as shown. The top of the truck-columns *d* and outer end portions of the inverted arch-bar *c*, where they bear on the axle-boxes *f*, are preferably channeled for receiving the arch-bar *b*, while the bottom of the middle portion of the inverted arch-bar *c*, beneath the spring-seat 6, is similarly channeled for receiving the bottom tie-bar *e*. The truck-columns *d* of one side frame are secured to the columns *d* of the other side by the transoms *g*, which in the present case are preferably angle-irons extending between the side frames of the truck, one on each side of the bolster *a*, in the usual manner, their end portions being fixed by rivets (or bolts) 9 to correspondingly-shaped brackets 10, which are formed, respectively, on the rear side of each colmn *d* integrally therewith and at a suitable distance above the bolster spring-seat 6, each bracket 10 preferably projecting longitudinally beyond the sides of the column *d* for insuring an extended bearing and rigid connection thereto of the transoms *g*, or the transoms *g* may be secured to the columns *d* in any other suitable manner or directly to the inverted arch-bar *c*. To each transom *g* are coupled the brake-hangers 11, as shown in Fig. 2, the brakes and other appendages of the truck (not shown) being of the ordinary well-known construction and needing no further description.

By making the truck-columns *d* and bolster spring-seats 6 integral with the inverted arch-bars *c* the separately-constructed truck-columns, with their fastenings, are superseded and simplified and the spring-plank dispensed with, whereby the truck is rendered more rigid and durable, and by eliminating the ordinary fastenings of these hitherto separately-constructed parts an element of danger from their loosening and fracture is removed. Moreover, by the strength and rigidity of the integral inverted arch-bar and truck-columns, combined with the rigid fastenings thereto of the transoms *g* to the columns *d* at a certain distance above the spring-seat 6, increased steadiness and stability are imparted to the truck, relative whereto it is here noted that the columns *d* are united integrally to the upwardly and outwardly inclined portions of the inverted arch-bar *c* immediately beneath the brackets 10 by horizontal tie-pieces 12 for insuring additional strength to the casting thereat, the said inclined portions being preferably channel or U shaped in cross-section, as shown, or otherwise as found most suitable.

What I claim as my invention, and desire to secure by Letters Patent, is—

1. In a car-truck, the combination with the truck-bolster and axle-boxes, of side frames comprising respectively an arch-bar, an inverted arch-bar consisting of an integral casting having the truck-columns and bolster spring-seat integral therewith, and a bottom tie-bar, means for fixing the said bars and axle-boxes together, and transoms connecting the side frames to each other at a suitable distance above the said seat, substantially as described.

2. In a car-truck, the combination with the truck-bolster, the transoms, and the axle-boxes, of side frames comprising respectively an arch-bar, an inverted arch-bar consisting of an integral casting having the truck-columns and bolster spring-seat integral therewith, brackets integral with the truck-columns at a suitable distance above the said seat and adapted for the attachment thereto of the transoms, and means for fixing the said bars and axle-boxes together, substantially as described.

3. In a car-truck, an inverted arch-bar consisting of an integral casting having the truck-columns and bolster spring-seat integral therewith, the said bar being channeled at the top and bottom, substantially as described.

In testimony whereof I have signed my name to this specification in the presence of two subscribing witnesses.

JOSHUA B. BARNES.

Witnesses:

EDWARD W. FURRELL,

ELIZABETH C. TOUHEY.