No. 817,168. PATENTED APR. 10, 1906.

D. S. FLORY.

DOOR SPRING.

APPLICATION FILED JUNE 26, 1905.

Fig. 1.

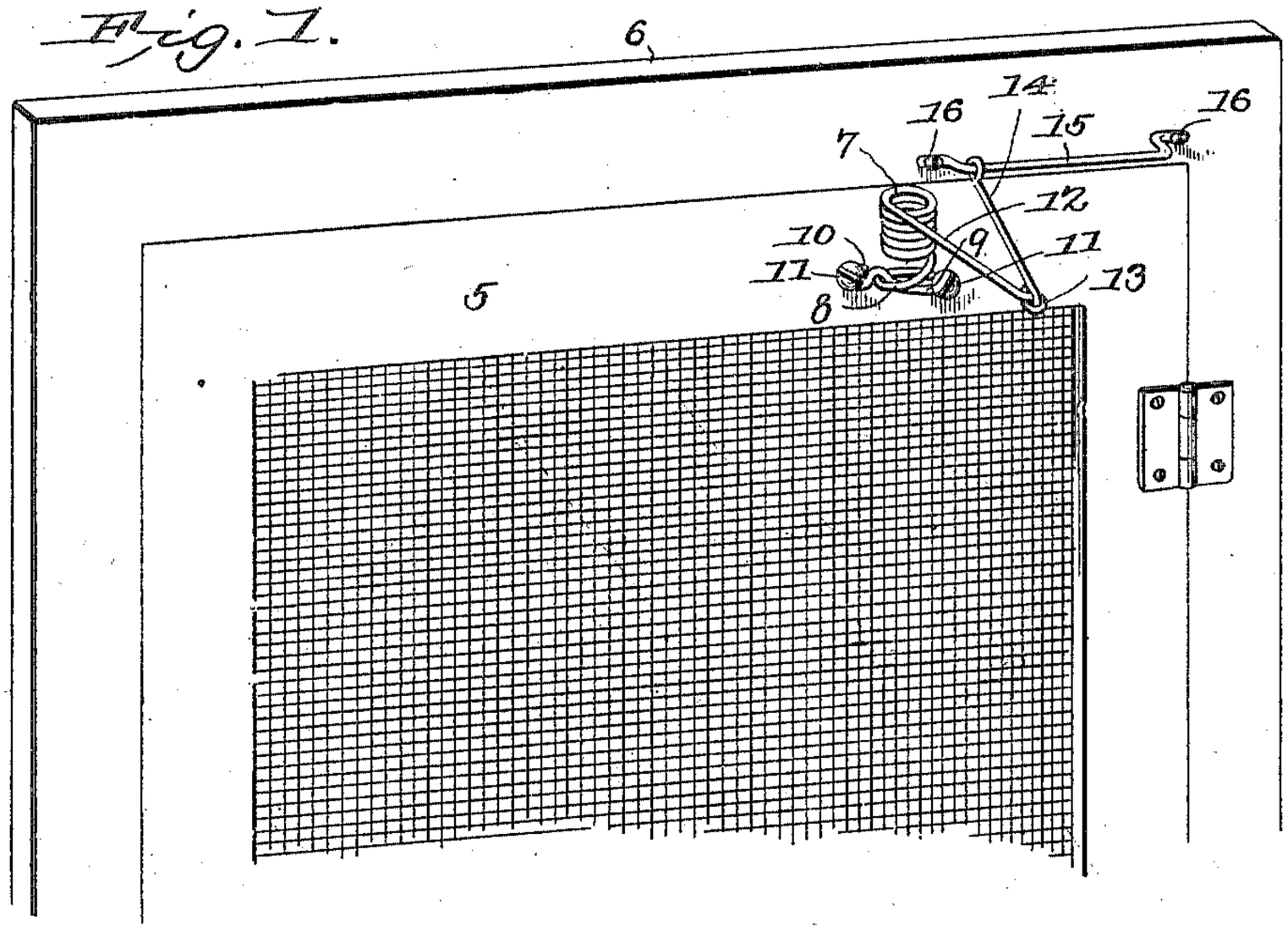

Fig. 2.

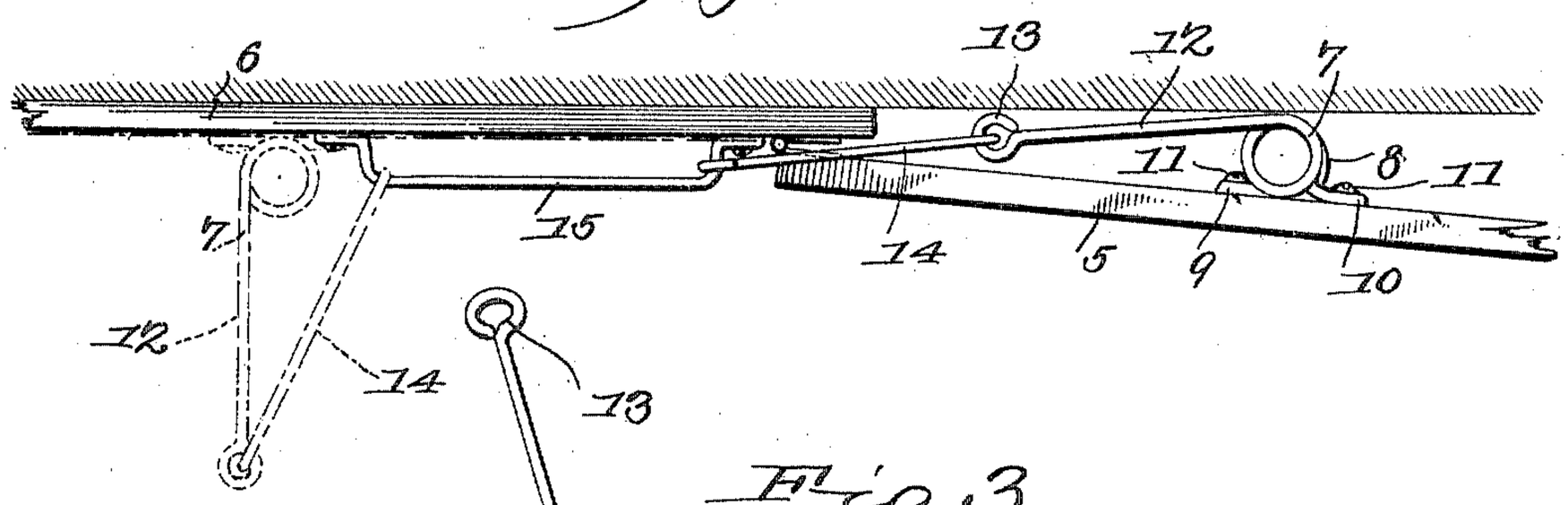

Fig. 3.

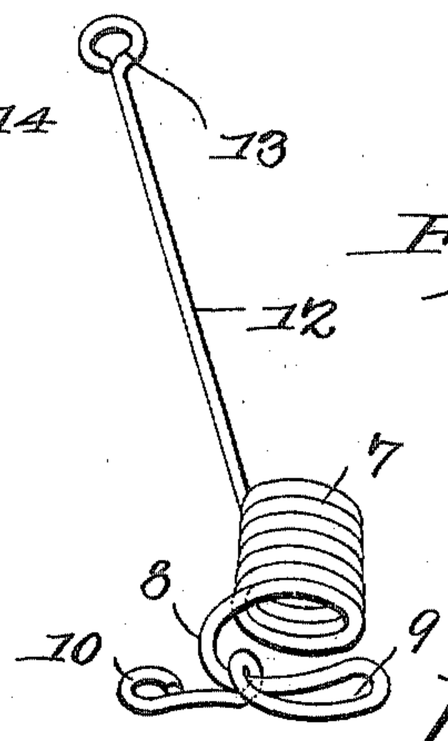

Daniel S. Flory,
Inventor.

Witnesses
E. J. Stewart
L. M. Acker

by C. A. Snow & Co.
Attorneys

UNITED STATES PATENT OFFICE.

DANIEL S. FLORY, OF NORTH ENGLISH, IOWA.

DOOR-SPRING.

No. 817,168. Specification of Letters Patent. Patented April 10, 1906.

Application filed June 26, 1905. Serial No. 267,071.

To all whom it may concern:

Be it known that I, DANIEL S. FLORY, a citizen of the United States, residing at North English, in the county of Iowa and State of Iowa, have invented a new and useful Door-Spring, of which the following is a specification.

This invention relates to an improved door-spring particularly designed for use in connection with screen-doors, and has for its object to provide a simple, inexpensive, and efficient device of this character whereby when the door is partially opened and then released the recoil of the spring will automatically close the same.

A further object of the invention is to provide a spring one end of which is fastened to the door or other movable member, while the opposite end thereof is bent to form a laterally-extending arm, the latter being pivotally connected to a link slidably mounted on a guiding loop or staple secured to the stationary member or door-casing.

The invention consists in the construction and novel combination and arrangement of parts hereinafter fully described, illustrated in the accompanying drawings, and pointed out in the claims hereto appended.

In the accompanying drawings, forming a part of this specification, Figure 1 is a perspective view of a portion of a screen-door, showing a spring constructed in accordance with my invention applied thereto. Fig. 2 is a top plan view of the pivoted edge of the door, showing the latter open. Fig. 3 is a perspective view of the spring detached.

Similar numerals of reference indicate corresponding parts in all the figures of the drawings.

The improved spring may be employed for automatically closing any particular style of swinging door, and by way of illustration the device is shown applied to an ordinary screen-door, in which 5 represents the door, and 6 the door-casing.

The spring is preferably formed from a single piece of wire, an intermediate portion of which is bent into a spring-coil 7, with the lower convolution 8 of the coil bent laterally to form an eye or loop 9, the end of the wire after the loop 9 is formed being twisted over and under the convolution 8 and thence bent laterally in alinement with the loop 9 to form a terminal loop or eye 10, the latter, together with the loop 9, being adapted to receive screws or similar fastening devices 11 for securing the spring in position on the door.

The opposite end of the wire after the coil 7 is formed is bent at substantially right angles to the longitudinal axis of the coil to form a laterally-extending arm 12, provided with a terminal hook 13. Pivotally engaging the hook 13 is a link 14, the opposite end of which is slidably mounted on a guiding loop or staple 15, secured in any suitable manner, as by screws 16, to the door-casing 6. The intermediate portion of the loop or staple is spaced from the casing 6 in order to permit free sliding movement of the link when the door is operated, and thereby relieve the spring from any undue strain.

The spring being secured to the door or movable member with the free end thereof in sliding engagement with the casing or stationary member, when the door is opened to its full extent the connecting-link 13 will be shifted rearwardly in the arc of a circle to the position shown in Fig. 2 of the drawings, in which position it will effectually retain the door open by the action of the coil-spring until a closing movement is imparted to said door. When the door is only partially opened, however, the spring will automatically close the same, as before stated.

Having thus described the invention, what is claimed is—

1. The combination with a casing, of a door hinged thereto, a coiled spring secured to the door and having its free end extended laterally to form a projecting arm having a terminal hook, a guide-loop secured to the casing and arranged at substantially right angles to the longitudinal axis of the spring, and a link slidably mounted on the loop and pivotally connected with the terminal hook of the projecting arm.

2. A spring formed of a single piece of wire, an intermediate portion of which is bent to form a coil having its upper convolution ex-

tended at right angles to the longitudinal axis of the coil to form a laterally-projecting arm having a terminal hook, the lower convolution of the coil being extended laterally to form a loop and the end of the wire twisted around the lower convolution and bent to form a second loop.

In testimony that I claim the foregoing as my own I have hereto affixed my signature in the presence of two witnesses.

DANIEL S. FLORY

Witnesses:

G. L. GORE,

FRANK WILLIAMS.