No. 810,653. PATENTED JAN. 23, 1906.

S. W. HYATT.

GAS BURNER.

APPLICATION FILED JAN. 14, 1905.

Fig. 1.

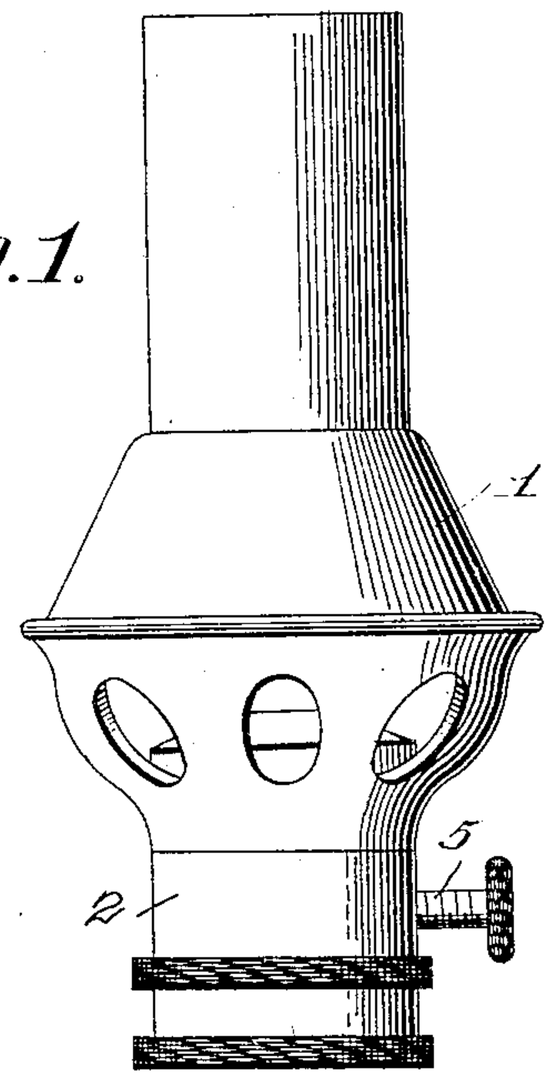

Fig. 2.

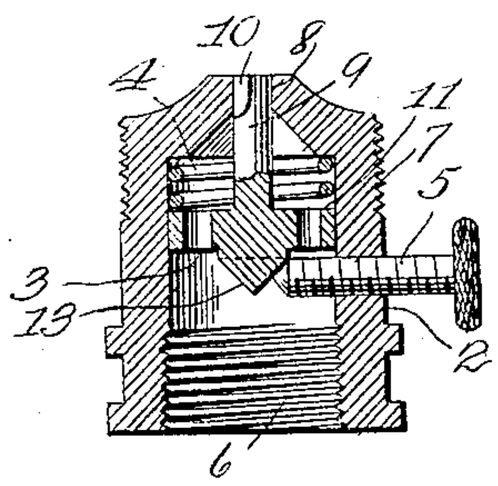

Fig. 5.

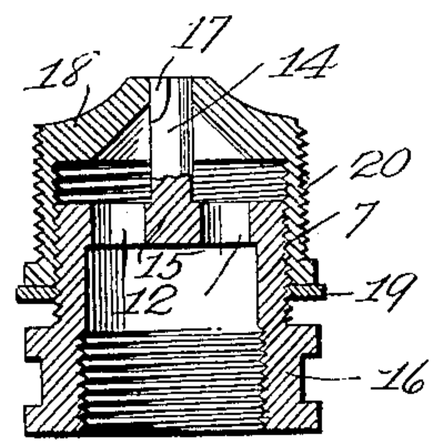

Fig. 4.

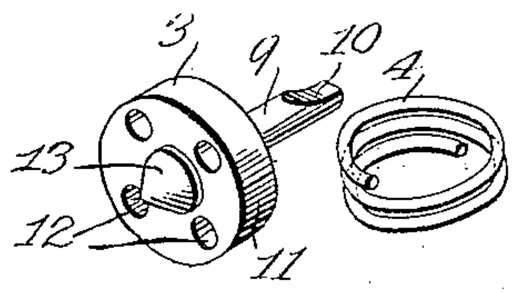

Fig. 3.

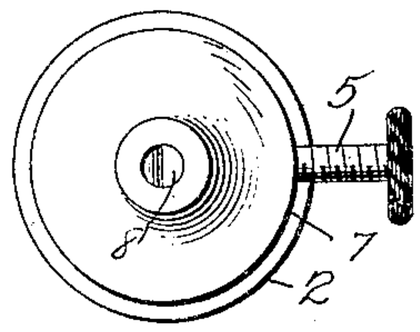

Fig. 6.

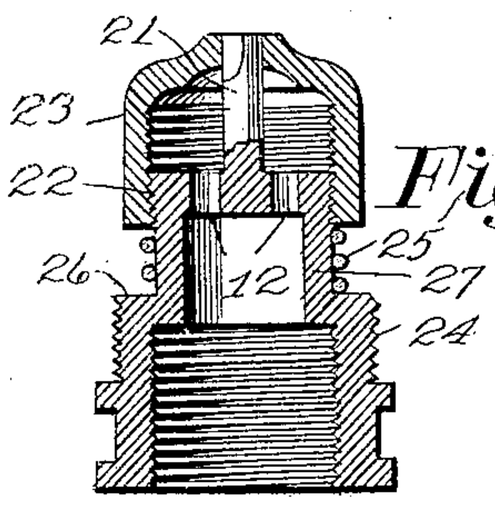

Fig. 7.

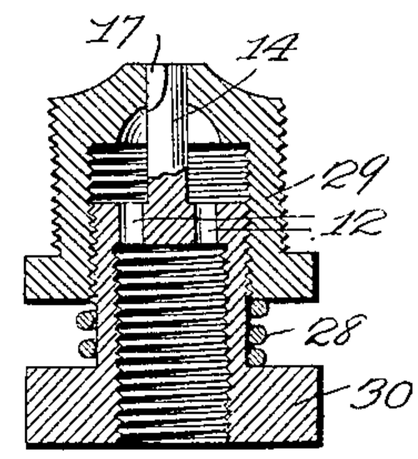

Witnesses:

E. F. Stewart

R. M. Elliott

Samuel W. Hyatt,
Inventor,

by Chas. Thom & Co.
Attorneys.

UNITED STATES PATENT OFFICE.

SAMUEL W. HYATT, OF MOUNT VERNON, OHIO.

GAS-BURNER.

No. 810,653. Specification of Letters Patent. Patented Jan. 23, 1906.

Application filed January 14, 1905. Serial No. 241,064.

To all whom it may concern:

Be it known that I, SAMUEL W. HYATT, a citizen of the United States, residing at Mount Vernon, in the county of Knox and State of Ohio, have invented a new and useful Gas-Burner, of which the following is a specification.

This invention relates generally to gas-burners, and more particularly to that class employed in connection with incandescent mantles.

The objects of the invention are to provide a gas-burner in which the supply of gas may in a novel manner be readily and accurately regulated, in which the valve controlling the escape of gas shall be so constructed as to preclude the possibility of accidentally entirely shutting off the feed of gas, thereby to permit the burner always to remain lighted, if desired, and thus avoid the trouble and annoyance attending the use of matches; to provide for a positive locking of the valve when the proper flow of gas has been secured; to secure a supply of gas in a solid column instead of in sprays or jets, as is common with burners of the ordinary construction, and generally to improve and simplify gas-burners of the character described.

With the above and other objects in view, as will appear as the nature of the invention is better understood, the same consists in the novel construction and combination of parts of a gas-burner, as will be hereinafter fully described and claimed.

In the accompanying drawings, forming a part of this specification, and in which like characters of reference indicate corresponding parts, Figure 1 is a view in side elevation of a mixing-tube, exhibiting one form of burner constituting the present invention combined therewith. Fig. 2 is a vertical sectional view through the gas-nozzle and a part of the valve of the burner used in connection with the mixing-tube shown in Fig. 1. Fig. 3 is a top plan view of Fig. 2. Fig. 4 is a perspective detail view of the valve and spring used in connection with the form of valve shown in Fig. 2. Figs. 5, 6, and 7 are vertical sectional views of different forms of burners embodying the same general principle as that shown in Fig. 2.

Referring to the drawings, and more particularly to Figs. 1 to 4 thereof, 1 designates a mixing-tube, which may be of the usual or any preferred construction, and therefore needs no detailed description. Combined with the mixing-tube is the gas-feeding part of the invention (shown in Figs. 2 and 4) and which comprises a nozzle 2, a valve designated generally 3, a valve-depressing spring 4, and a valve-adjusting screw 5. The nozzle, as usual in devices of this character, is provided with internal threads 6 to engage the gas-supply pipe and with external threads 7 to be engaged by the mixing-tube 1. The top of the nozzle is approximately cone-shaped and is provided centrally with an orifice 8, in which loosely fits the stem 9 of the valve, thereby to leave a small clearance for the escape of gas when the valve is seated, thus to allow the burner to remain ignited, if so desired. In order to permit the passage of a column of gas between the stem and the walls of the orifice or gas-port 8, the gas-controlling end of the stem is cut away at 10, preferably on a curve, to form a gas-escape, and the gas-escape, in conjunction with the opposed wall of the orifice, will present a gas-duct through which a solid column of gas will escape instead of in jets or in a hollow column, as where the ordinary needle-valve is employed. It will be seen that by making the stem of slightly less diameter than the gas-port of the nozzle that even should the former be projected upward a sufficient distance to cause the lower terminal of the gas-escape 10 to be disposed within the port there will still be a sufficient amount of gas escape around the stem to enable a small light or flame to be maintained within the burner. The stem has connected to it or formed integral with it a head 11, which is of a size to fit within the bore of the nozzle, and this head is provided with a series of orifices 12, in this instance four, through which the gas escapes to the upper portion of the nozzle. The under side of the head is provided with a conical extension 13, which is engaged by the cone-terminal of the adjusting-screw 5, that projects a sufficient distance beyond the nozzle to permit of its being readily manipulated, thus to raise or lower the stem, according as may be necessary. In order to cause the extension or bearing 13 always to engage with the cone-terminal of the adjusting-screw, the valve depressing spring 4 is employed, which is disposed within the nozzle and has its lower whirl bearing against the upper side of the head and its upper whirl against the under side of the top of the nozzle. It will be seen by the employment of this spring that the valve will be positively maintained in its

proper adjustment and, further, that any accidental shifting of the screw will be precluded. In the form of the invention thus far described the valve is a separate and distinct structure from the nozzle and may be made and sold as an article of manufacture and supplied to the trade as such.

In the form of the invention shown in Fig. 5 the valve 14 is preferably formed integral with the top 15 of the nozzle 16 and is provided with a gas-escape 17, similar to that shown in Fig. 2. The external threads of the nozzle are engaged by a cap 18, which by being moved up or down upon the nozzle will regulate the escape of gas through the gas-escape, and when the desired adjustment has been secured the cap is locked in its adjusted position by a locking nut or disk 19, which engages the external threads 7 and bears against its under side or edge of the cap. The cap is provided with external threads 20 to adapt it for connection with the mixing-tube.

In the form of invention shown in Fig. 6 the nozzle is provided with a valve 21, the same in construction and operation as that shown in Figs. 2 and 5, and its upper external portion is provided with threads 22 to be engaged by a regulating-cap 23, the top of which is provided with a port through which the valve projects. The cap is of less diameter than the opening in the base of the mixing-tube and will readily project therethrough, and the lower external portion of the nozzle is provided with threads 24, which are engaged by the mixing-tube. In order to hold the cap 23 at the desired adjustment relatively to the valve, there is a coiled spring 25 employed, the upper whirl of which bears against the under side of the cap and its lower whirl against a circumferential shoulder 26, formed by the reduced neck 27 of the nozzle.

The form of invention shown in Fig. 7 is a counterpart of that shown in Fig. 5, except that in lieu of the locking-nut 19 a coiled spring 28 is employed, which is interposed between the regulating-cap 29 and the base 30 of the nozzle.

It will be seen from the foregoing description that although the improvements of the present invention are simple in character they will be thoroughly efficient in use for the purpose defined and that by the employment of the locking-nut shown in Fig. 5 and the springs shown in Figs. 6 and 7 the threads of the regulating-cap will be caused to impinge the threads of the nozzle in such manner as to form a gas-tight juncture between the parts, thus to preclude the escape of gas, which would materially detract from the efficiency of the burner as a whole.

Having thus described the invention, what is claimed is—

A gas-burner comprising a nozzle provided with a port, a valve having a stem of less cross diameter throughout than the port and adapted to project therethrough and having its tip cut away to provide a gas-escape, means for adjusting the parts with relation to each other, and means for holding the parts in their adjusted positions.

In testimony that I claim the foregoing as my own I have hereto affixed my signature in the presence of two witnesses.

SAMUEL W. HYATT.

Witnesses:
CALVIN V. TROTT,
D. B. GRUBB.