No. 803,003. PATENTED OCT. 31, 1905.

W. P. MATTHEWS.

FERTILIZER DISTRIBUTER.

APPLICATION FILED AUG. 5, 1905.

2 SHEETS—SHEET 1.

Fig. 1.

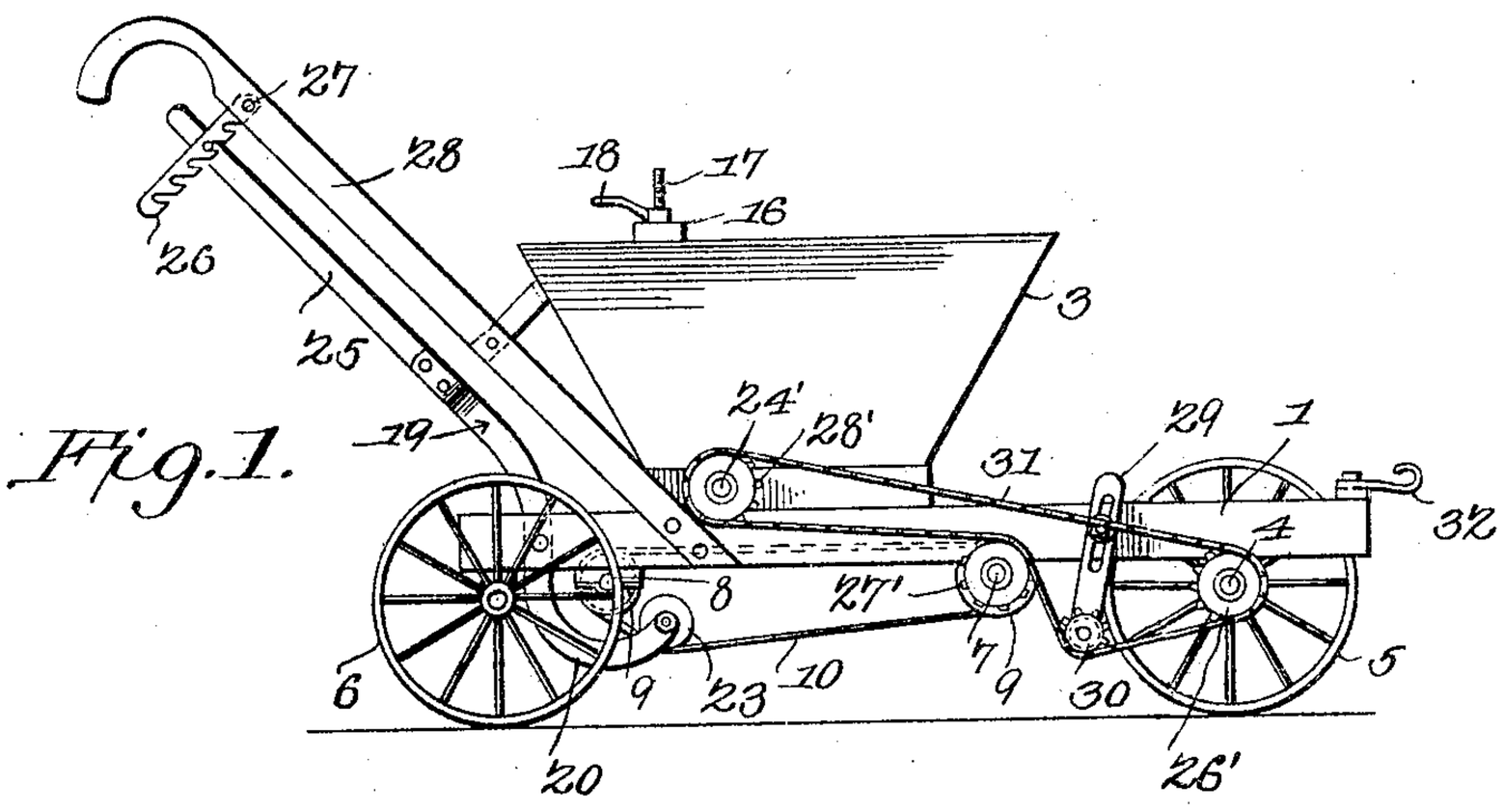

Fig. 2.

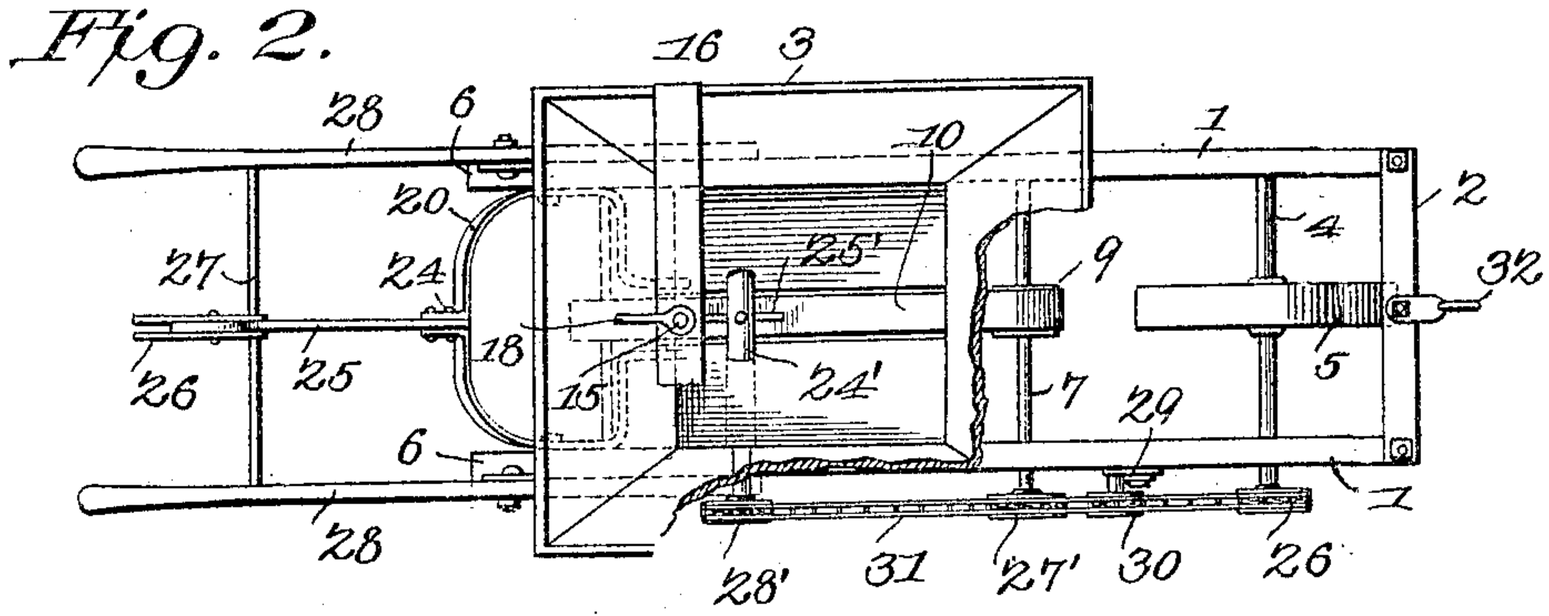

Witnesses
E. J. Clement
Wm. Bagger

William P. Matthews,
Inventor.
by Cachow & Co.,
Attorneys

No. 803,003. PATENTED OCT. 31, 1905.

W. P. MATTHEWS.

FERTILIZER DISTRIBUTER.

APPLICATION FILED AUG. 5, 1905.

2 SHEETS—SHEET 2.

Fig. 3.

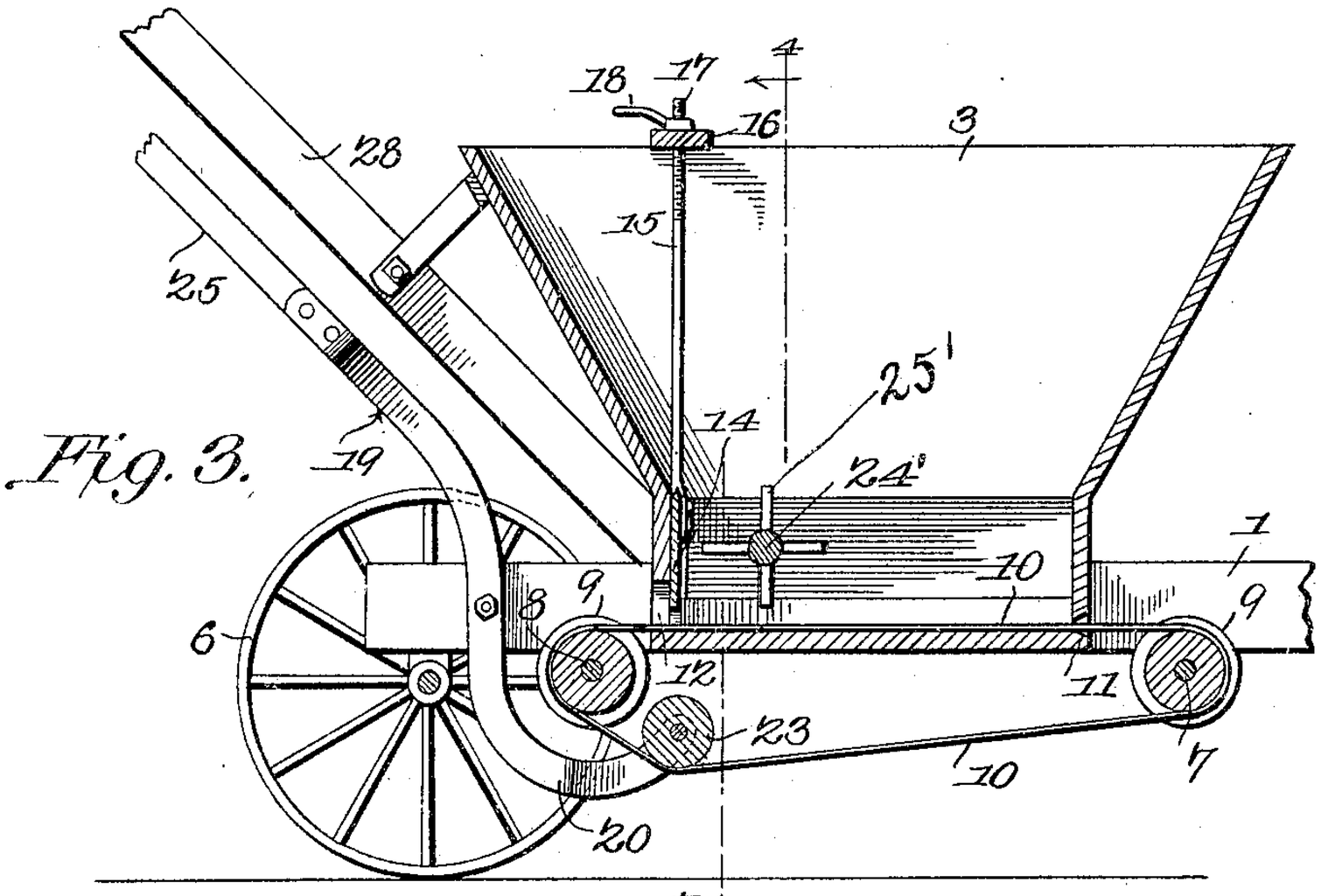

Fig. 4.

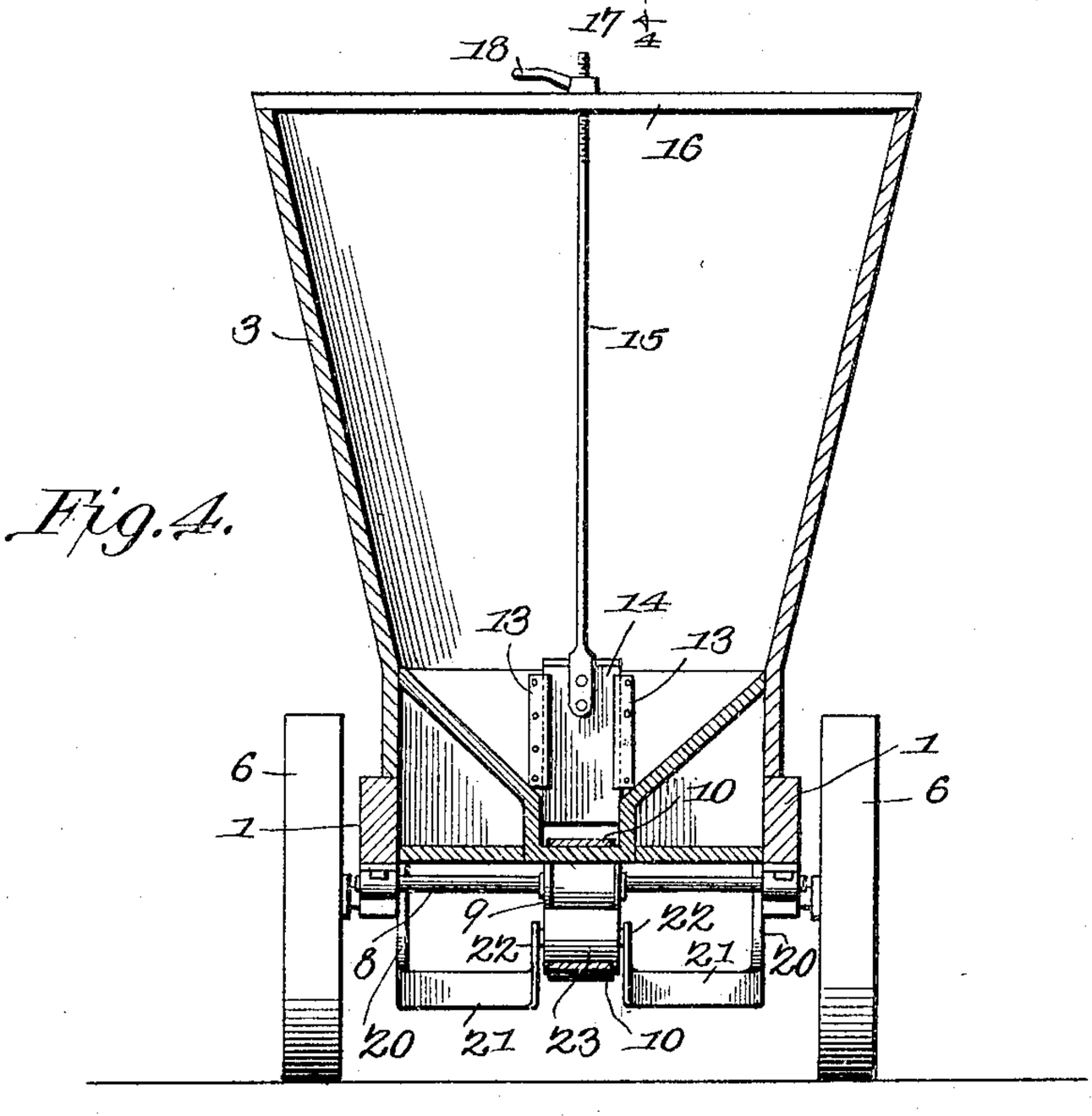

Witnesses
E. F. Blunt
Wm. Bagger

William P. Matthews,
Inventor.
by Church & Co.,
Attorneys

ANDREW. B GRAHAM CO., PHOTO-LITHOGRAPHERS, WASHINGTON, D. C.

UNITED STATES PATENT OFFICE.

WILLIAM PERKINS MATTHEWS, OF DARLINGTON, LOUISIANA.

FERTILIZER-DISTRIBUTER.

No. 803,003. Specification of Letters Patent. Patented Oct. 31, 1905.

Application filed August 5, 1905. Serial No. 272,908.

To all whom it may concern:

Be it known that I, WILLIAM PERKINS MATTHEWS, a citizen of the United States, residing at Darlington, in the parish of St. Helena and State of Louisiana, have invented a new and useful Fertilizer-Distributer, of which the following is a specification.

This invention relates to fertilizer-distributers of that class which are utilized for the purpose of depositing so-called "commercial" fertilizers, including guano, bone-meal, and the like; and it has among its objects to simplify and improve the construction and operation of this class of devices.

With these and other ends in view, which will readily appear as the nature of the invention is better understood, the same consists in the improved construction and novel arrangement and combination of parts hereinafter fully described, and particularly pointed out in the claim.

In the accompanying drawings has been illustrated a simple and preferred form of embodiment of the invention, it being, however, understood that no limitations are necessarily made to the precise structural details therein exhibited, but that changes, alterations, and modifications may be made within the scope of the invention and without departing from the spirit or sacrificing the efficiency of the same.

In said drawings, Figure 1 is a side elevation of a fertilizer-distributer constructed in accordance with the principles of the invention. Fig. 2 is a top plan view of the same. Fig. 3 is a longitudinal sectional view, enlarged, taken vertically through the hopper and related parts. Fig. 4 is a transverse sectional view taken on the plane indicated by the line 4 4 in Fig. 3.

Corresponding parts in the several figures are indicated throughout by similar characters of reference.

A frame is provided composed of side members 1 1 and a front cross-bar 2, said side members being spaced apart and connected near their rear ends by means of a hopper 3, the lower end of which is interposed between said side members. The latter are provided near their front ends with bearings, in which a shaft 4 is supported for rotation, said shaft carrying a ground-engaging wheel 5. Additional supporting-wheels 6 6 are connected for rotation with the side members 1 1 near the rear ends of the latter.

The side members of the frame are provided with bearings for shafts 7 and 8, disposed, respectively, in front and in rear of the hopper and carrying rollers 9, supporting an endless belt 10, the upper lead of which passes through slots 11 and 12 in the front and rear walls of the hopper, respectively, said upper lead being supported upon the floor of the hopper and confined and guided between the straight vertical lower ends of the side members of the hopper. Adjacent to the slot 12 in the rear wall of the hopper are guide-flanges 13, between which moves a vertically-adjustable gate 14, whereby the size of the escape-opening may be regulated, said gate being provided with an upward-extending rod 15, the upper extremity of which is extended through a cross-bar 16, supported upon the hopper, said extended end of the rod 15 being screw-threaded, as shown at 17, and provided with a rail-nut 18, whereby it may be conveniently adjusted.

Supported pivotally upon the inner sides of the frame members 1, near the rear ends of the latter, are levers 19, the lower extremities of which are curved to an approximately semicircular shape, as shown at 20, so that said levers may be operated without danger of interfering with the shaft 8 or with the flanged roller 9 upon said shaft. Said curved levers are provided at their lower extremities with inward-extending brackets 21, affording bearings for a shaft 22, carrying a roller 23, which is adapted to bear downwardly upon the lower lead of the endless belt 10 for the purpose of tightening the latter. The upper extremities of the levers 19 converge, as indicated at 24, and are connected with a handle-bar 25, adapted to engage a ratchet-bar 26, secured to one of the spacing-rungs 27 of handles 28, which are suitably attached to the frame of the machine.

The side walls of the hopper have bearings for a transverse shaft 24′, which is provided with a plurality of radially-extending fingers 25′, forming agitators, whereby the contents of the hopper will be kept in a state of commotion while the machine is in operation, thus loosening said contents and permitting a portion thereof to be carried by the endless belt 10 in a rearward direction through the discharge-opening 12 to be discharged upon the ground between the levers that carry the tightening-pulley 23.

The shaft of the driving-wheel carries a sprocket-wheel 26′, and sprockets 27′ and 28′ are likewise mounted upon the shafts 7 and

24′. A slotted arm 29, adjustably connected with one of the frame members 1, carries an idler-sprocket 30 for the purpose of tightening a link belt 31, which passes around the sprockets 26′ and 28′, over the sprocket 27′, and under the sprocket 30, thereby serving to impart motion in the desired direction from the driving-wheel to the belt-carrying shaft 7 and to the agitator-carrying shaft 24′.

A draft attachment, such as a hook 32, is connected with the front cross-bar of the frame of the machine, enabling the latter to be conveniently propelled.

From the foregoing description, taken in connection with the drawings hereto annexed, the operation and advantages of this invention will be readily understood by those skilled in the art to which it appertains. As the machine progresses over the field the contents of the hopper are loosened by the agitators connected with the revolving shaft 24′ and motion in a rearward direction is imparted to the upper lead of the endless belt 10, which latter is kept at the desired tension by means of the tightening-roller 23, said tension being controlled by the arm 25, which may be retained at various adjustments. The quantity of material discharged from the hopper will be regulated by the size of the discharge-opening in the rear wall of the hopper, and it may be further regulated by the size of the belt-driving sprockets, whereby said belt may be variously speeded. When the arm 25 is adjusted so as to relieve the belt of all tension, the said belt will be kept stationary by the weight of the superimposed contents of the hopper, it being observed that the agitator-shaft is disposed near the rear wall of the hopper, so that the material occupying the front portion of the hopper may rest and impose its weight upon the belt, which will be thereby prevented from moving. In this manner the operation of the device may be temporarily suspended when desired by merely manipulating the lever-arm 25 without necessarily moving the gate 14 to a closed position. This will be found very convenient while operating in the field, as will be readily understood.

The general construction of the improved device is simple and inexpensive, and it has proven by practical experience to be efficient for the purposes for which it is intended.

Having thus described the invention, what is claimed is—

In a fertilizer-distributer, a hopper having a valved discharge-opening at its rear end, a feed-belt the upper lead of which is movable longitudinally through said hopper and through the discharge-opening of the latter said belt being of a length to permit it to lie slack and idle, a pair of levers carrying a tension-roller engaging the lower lead of the belt, an operating-arm connected with said levers, means for retaining said arm at various adjustments to regulate the tension upon the belt, and means for imparting motion in a rearward direction to the upper lead of said belt.

In testimony that I claim the foregoing as my own I have hereto affixed my signature in the presence of two witnesses.

WILLIAM PERKINS MATTHEWS.

Witnesses:
J. H. WOMACK,
R. A. BLOUNT.