No. 794,622. PATENTED JULY 11, 1905.

J. B. & J. L. HENDERSON.

STATION INDICATOR.

APPLICATION FILED DEC. 22, 1903.

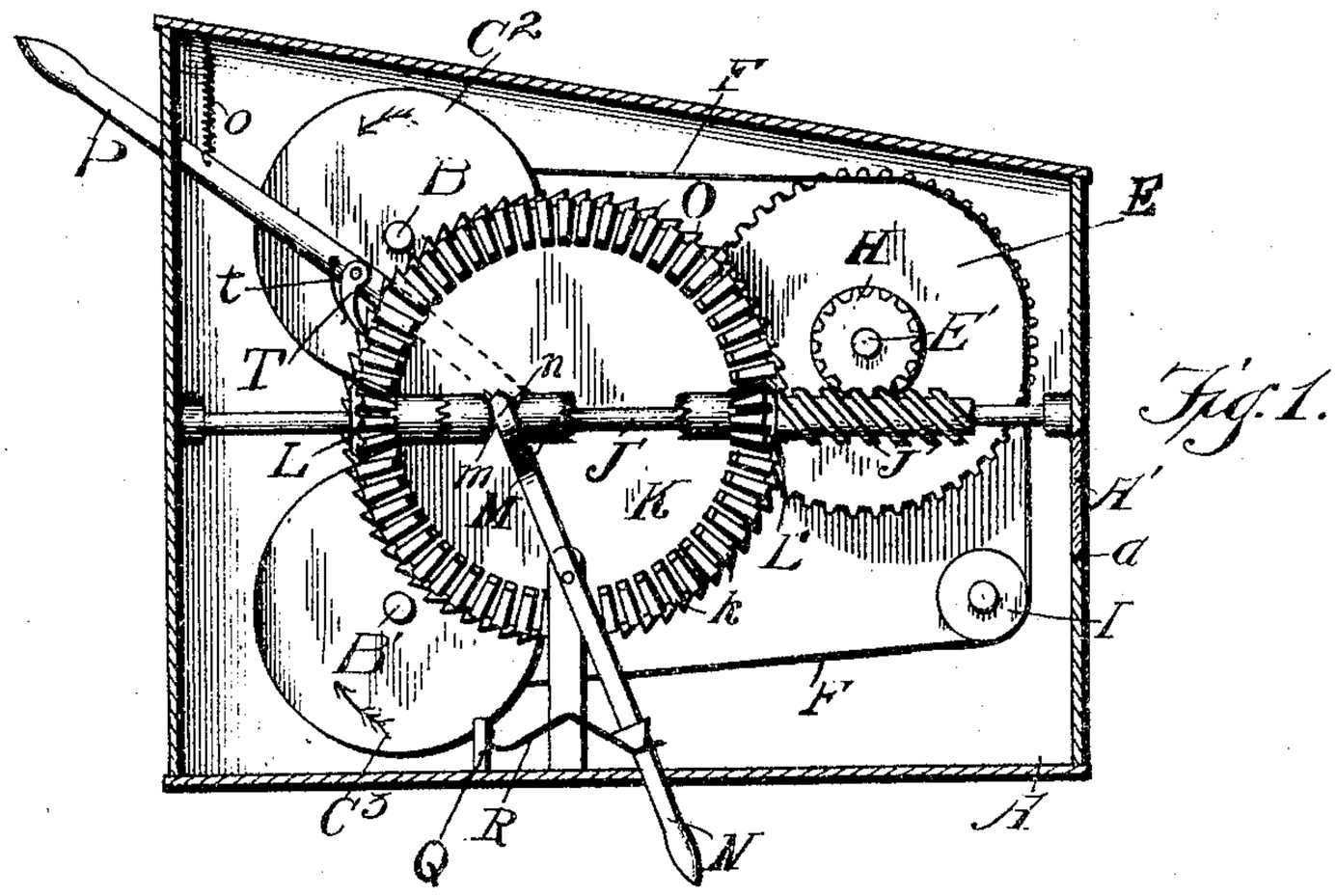

Fig. 1.

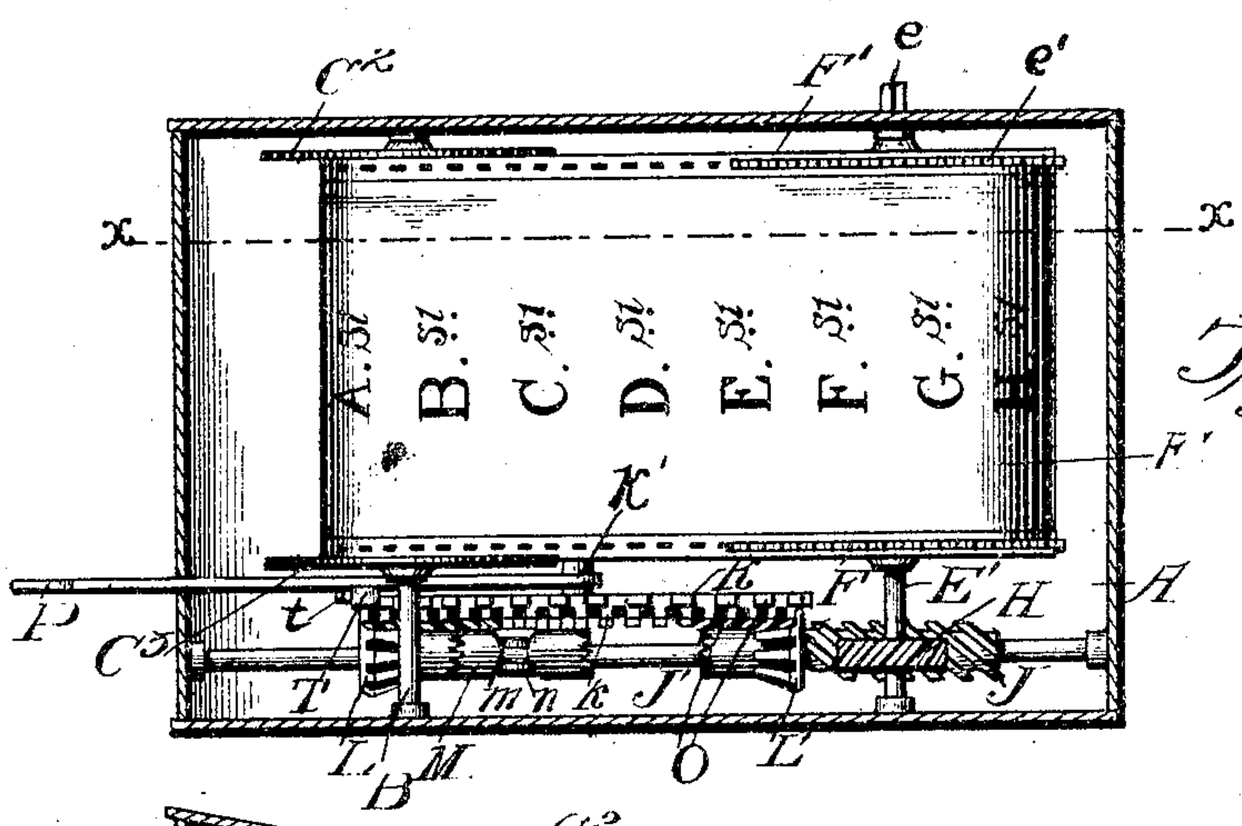

Fig. 2.

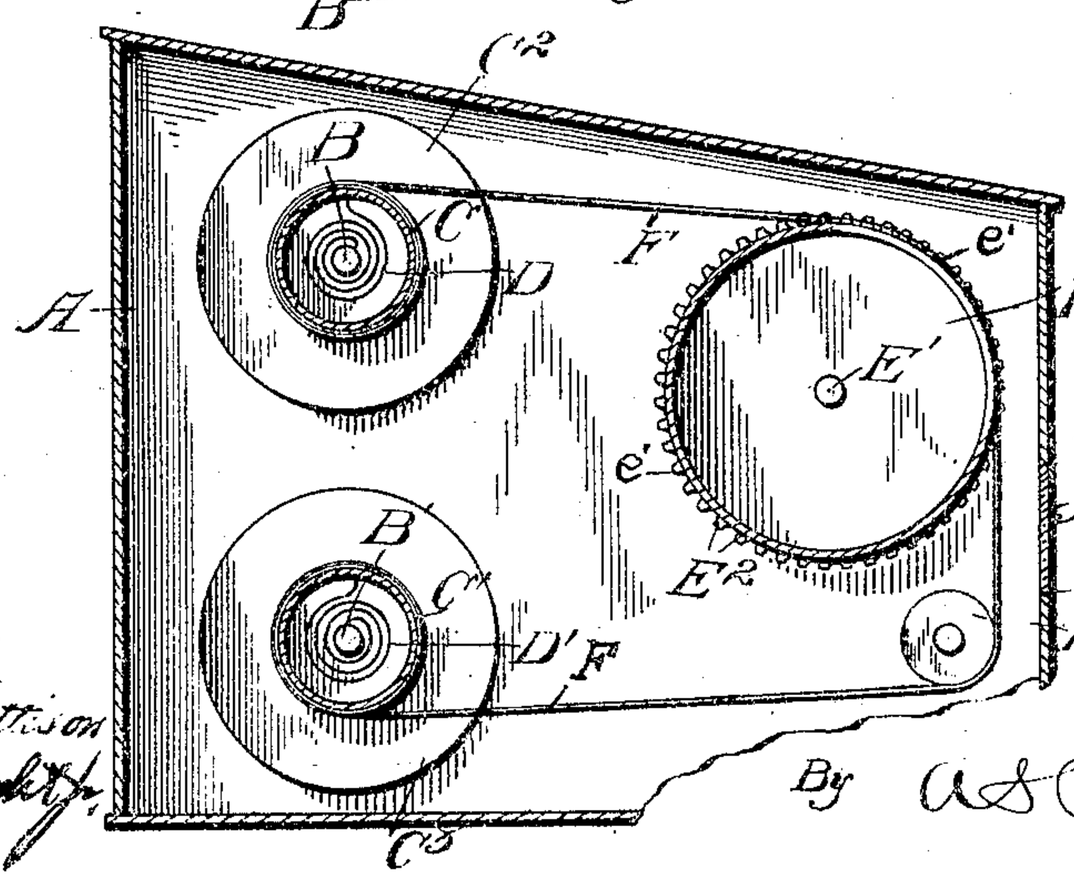

Fig. 3.

Witnesses

J. F. Pattison

E. R. Wright Jr.

Inventors

J. B. Henderson

J. L. Henderson

By A. S. Pattison Attorney

No. 794,622. Patented July 11, 1905.

UNITED STATES PATENT OFFICE.

JOCK BEDELL HENDERSON AND JOCK LEE HENDERSON, OF WILLIAMSTOWN, WEST VIRGINIA.

STATION-INDICATOR.

SPECIFICATION forming part of Letters Patent No. 794,622, dated July 11, 1905.

Application filed December 22, 1903. Serial No. 186,150.

To all whom it may concern:

Be it known that we, JOCK BEDELL HENDERSON and JOCK LEE HENDERSON, citizens of the United States, residing at Williamstown, in the county of Wood and State of West Virginia, have invented new and useful Improvements in Station-Indicators, of which the following is a specification.

Our invention relates to improvements in station-indicators, and pertains more particularly to that class used on street and railway cars and which are operated by hand by the conductor.

The object of our invention is to provide an indicator which will indicate the different streets or stations and after the car has traveled to the end of the route will start and indicate in their proper order the streets or stations over the line on the return trip of the car, and thus we aim to produce a more simple, cheap, and effective indicator than has heretofore been produced.

In the accompanying drawings, Figure 1 is a side view of our improved indicator, showing the side of the casing removed. Fig. 2 is a top plan view showing the winding-drum and the belt-operating drum. Fig. 3 is a vertical sectional view taken on the line *x x* of Fig. 2.

Referring now to the drawings, A represents a casing, which may be of any desired form, but preferably of that shown in the drawings, and the casing is adapted to be placed in the forward end of the car, where it can be readily seen by all in the car. The said casing A has in its forward end an opening *a*, which extends transverse the casing and through which the belt is adapted to be exhibited, and the same is preferably covered by a glass plate A′, and thus dirt and moisture are prevented from entering the same. Adjacent the rear end of said casing and extending horizontally transversely thereof are two shafts B and B′, which are arranged one above the other and a considerable distance apart. The said shafts are rigidly supported by the side of the casing and are therefore held against rotation, for the purpose hereinafter more fully described. Rotatably mounted upon said shafts B and B′ are the drums C and C′, and said drums are of a diameter considerably larger than that of the shafts, thus leaving an enlarged space between the same. Coiled upon the shaft B within the drum C is a coil-spring D, which has one end secured to the shaft B and the other secured to the drum C, and thus we produce a spring-drum the purpose and operation of which will be hereinafter more fully described. The shaft B′ has a coiled spring D′ mounted therein within the drum C′ and secured in the same manner as the spring D, and the operation is therefore the same.

The drums C and C′ are provided at their ends with outwardly-extending circular flanges C^2 and C^3, which serve as guides for the belt, thus causing the same to be evenly wound on the drums and also preventing the same from slipping therefrom.

Rotatably mounted in the forward end of the frame A is an enlarged main drive-drum E, which has its outer circumference in a line with the outer edge of the drum C. The said drum E is carried by a shaft E′, which is rotatably mounted in the frame, and one end of said shaft extends through the casing A and is squared at *e* for the purpose of receiving a key by means of which the main drive-drum may be driven independent of the mechanism hereinafter described, and thus the belt is positively and more rapidly driven when desired. It will be understood that the pitch of the worm-gear H is such that the worm J may be driven thereby, but the other mechanism being thrown out of engagement with the shaft, as heretofore described. The said drum E adjacent each end is provided with a row of circumferentially-arranged outwardly-extending teeth E′, and passing over said drum is a belt F, which carries at each side and secured thereto the metal tapes F′, which are provided with openings *f*, which are adapted to receive the teeth *e*′, carried by the drum E, and thus the belt is driven. The said belt F has printed or painted thereon the different streets. The shaft E′ within the frame has rigidly mounted thereon a gear H, the purpose of which is to drive said shaft, as hereinafter more fully described.

Mounted in said frame below the drum E is a small idle drum I, which causes the belt F to travel in a vertical plane across the opening *a*, and thus the name or number of the street is plainly exhibited to the passengers in the car.

The tendency of the springs D and D′, carried by the drums C and C′, is to hold or turn the drum in the direction indicated by arrows in Fig. 1. The belt F has its ends secured to the drums C and C′, as clearly shown in Fig. 3, and passes over the drum E and the small drum I, and the two ends of the belt being normally drawn tight by the springs in the drums C and C′ the belt is at all times held tightly over the drums E and I.

The sprocket-wheel H, carried by the drum E, has meshing therewith a horizontal worm J, which is rigidly supported upon the elongated horizontal shaft J′, which is rotatably mounted in the frame A in any desired manner. The said shaft J′ extends across the face of a vertically-disposed rotatable disk K, which has the teeth *k*, carried by the outer side thereof. The shaft J′ carries two small bevel-gears L and L′, which mesh with the teeth *k* on opposite sides of the disk K, and thus the shaft J′ may be rotated in either direction. The gears L and L′ are loosely mounted upon the shaft J′, but held against longitudinal movement, and thus the gears are at all times in mesh with and revolved by the large gear K, and mounted upon said shaft J′ between the gears L and L′ is a clutch mechanism M, which is slidable upon said shaft, yet keyed thereto, so as to at all times revolve therewith, and the clutch mechanism is adapted to be driven in either direction by the gears L and L′, and thus the shaft J′ is driven in either direction. Pivoted within the casing A is a lever N, the inner end of which is bifurcated at *n* and is adapted to enter a circumferential groove *m* in the clutch M, and thus the shaft is readily connected with either of the gears L and L′. The said disk K has its outer periphery provided with ratchet-teeth O, and pivoted upon the same shaft K′, carrying the disk K, is a lever P, which has a pawl T, which is adapted to engage said teeth O and is held against said teeth by the spring *t*, and a spring *o* normally holds the lever in an upward position.

The operation of our device is as follows: The downward pull of the lever P causes the pawl to turn the disk K a distance sufficient to cause the shaft J′ to be revolved through the medium of the gear L, and thus the belt F is caused to revolve in a direction indicated by the arrow on the drum C^2 in Fig. 1, and said belt travels a distance sufficient to cause another sign to be exhibited through the opening *a*. The slack of the belt between the drum E and the drum C is taken up by the tension of the springs within the drums. When the end of the route is reached, the belt has been wound upon the drum C, and by throwing the clutch M into engagement with the gear L′ the drum E is caused to revolve in the opposite direction, and the belt F is drawn from the drum C and wound by the spring upon the drum C′.

The lower face of the casing A is provided with a stud Q, which is provided with a horizontal approximately inverted-V-shaped spring R, which is in the path of the clutch-operating lever N, and thus the spring will hold the lever in either of the two interlocked positions.

Having thus described our invention, what we claim as new, and desire to secure by Letters Patent, is—

1. A station-indicator, comprising spring-wound drums, a belt having its ends secured to said drums, a drum intermediate said drums, and over which said belt passes, means carried by said intermediate drum for driving the belt, a worm-gear carried by said drum, a shaft adjacent said worm-gear, a worm carried by said shaft and meshing with the worm-gear, a large beveled gear adjacent the opposite end of said shaft, beveled gears rotatably mounted upon said shaft and meshing with opposite sides of said beveled gear and held against longitudinal movement upon the shaft, a clutch slidably mounted on said shaft between the gears and held against rotation, said clutch having a reduced central portion and an intermediately-pivoted lever having its upper end bifurcated and resting in said reduced central portion of the clutch, means for holding the lower end of said lever in its adjusted position, the outer periphery of said large beveled gear having ratchet-teeth, a lever pivoted on the shaft of said large gear, a pawl carried by the lever and normally held in engagement with the ratchet-teeth carried by the large beveled gear, and means for normally holding the lever in an upward position.

2. A station-indicator, comprising a belt, a drum over which said belt passes, a worm-gear carried by said drum, a worm meshing with said worm-gear, and adapted to drive the worm-gear in either direction, and means carried by the opposite end of the drum for rotating it in either direction independent of the worm, the pitch of the worm and worm-gear being such that the worm can be driven by said worm-gear.

3. A station-indicator, comprising a belt, a drum over which said belt passes, a worm-gear carried by said drum, a worm meshing with said worm-gear and adapted to drive the worm-gear, means carried by the drum for rotating the same, and the pitch of the worm and worm-gear being such that the worm can be driven by the worm-gear, a shaft carried by the worm and a lever adapted to indirectly operate said shaft in either direction, whereby the drum may be driven in either direction.

4. A station-indicator comprising a belt, a drum over which said belt passes, a worm-gear carried by one end of said drum, a worm

meshing with said worm-gear, and adapted to drive the worm-gear in either direction, a shaft carried by the opposite end of said drum carrying the worm-gear, and having its outer end squared to receive a key for rotating the drum in either direction, and the pitch of the worm and worm-gear being such that the worm can be driven by said worm-gear.

In testimony whereof we have hereunto set our hands in the presence of two subscribing witnesses.

JOCK BEDELL HENDERSON.
JOCK LEE HENDERSON.

Witnesses:
DON L. HENDERSON,
A. T. HENDERSON.