No. 793,813. PATENTED JULY 4, 1905.

S. T. BAILEY.

MINE DOOR OPERATING DEVICE.

APPLICATION FILED MAR. 27, 1905.

2 SHEETS—SHEET 1.

Fig. 1.

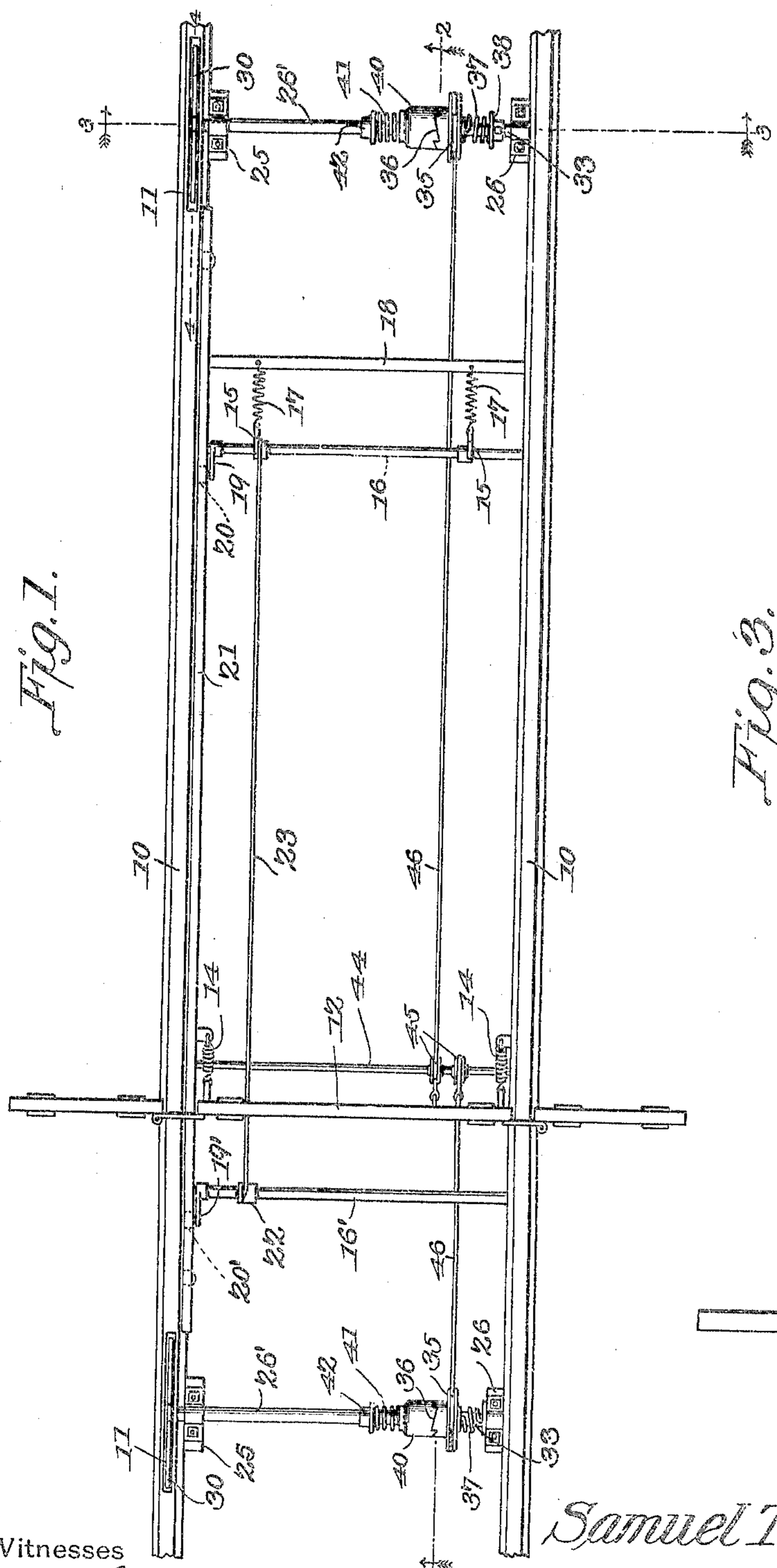

Fig. 3.

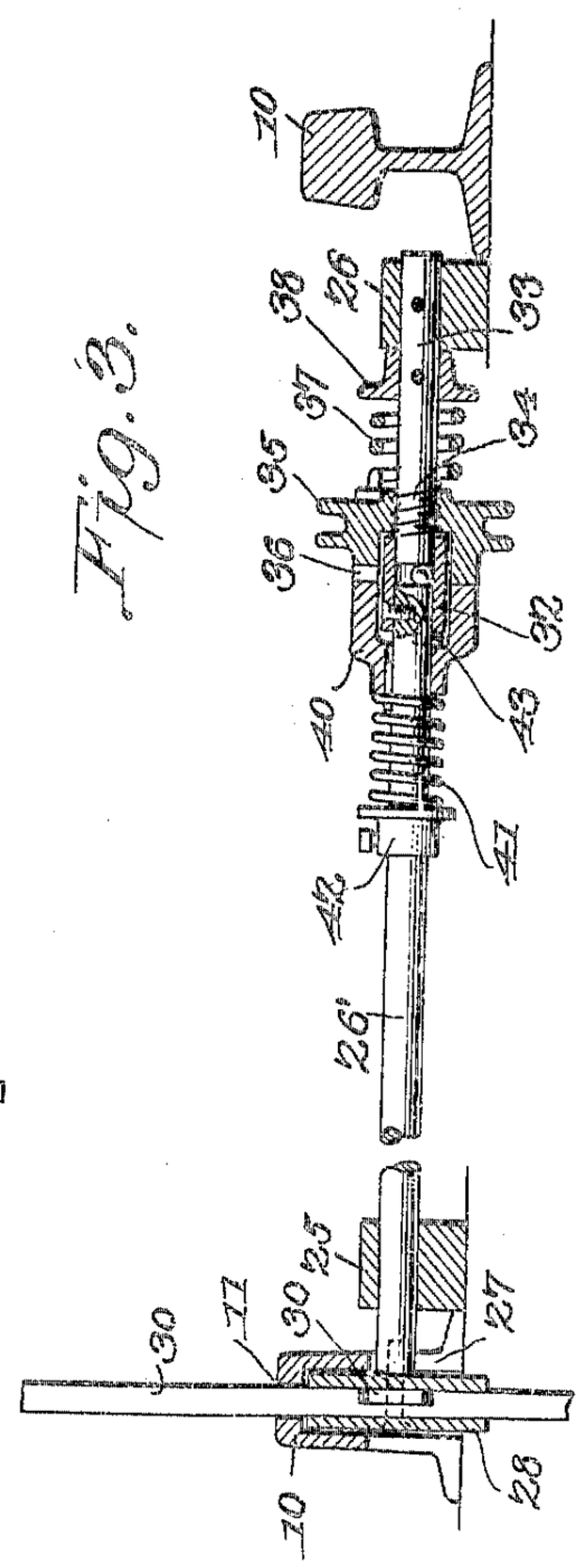

Witnesses

E. F. Edwards

Jno. E. Parker

Samuel T. Bailey, Inventor,

by Chas. Howard & Co., Attorneys

No. 793,813. PATENTED JULY 4, 1905.

S. T. BAILEY.

MINE DOOR OPERATING DEVICE.

APPLICATION FILED MAR. 27, 1905.

2 SHEETS—SHEET 2.

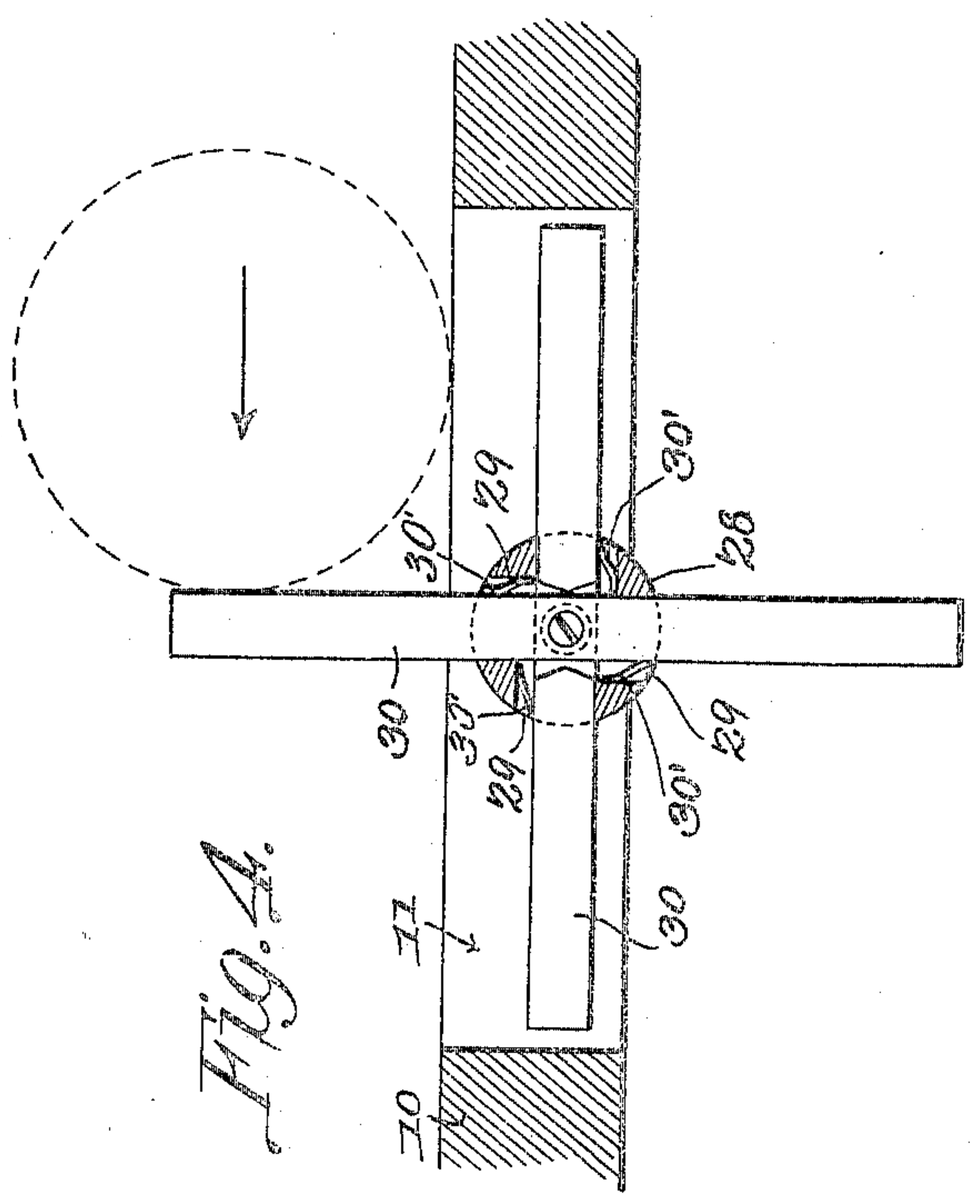

Fig. 4.

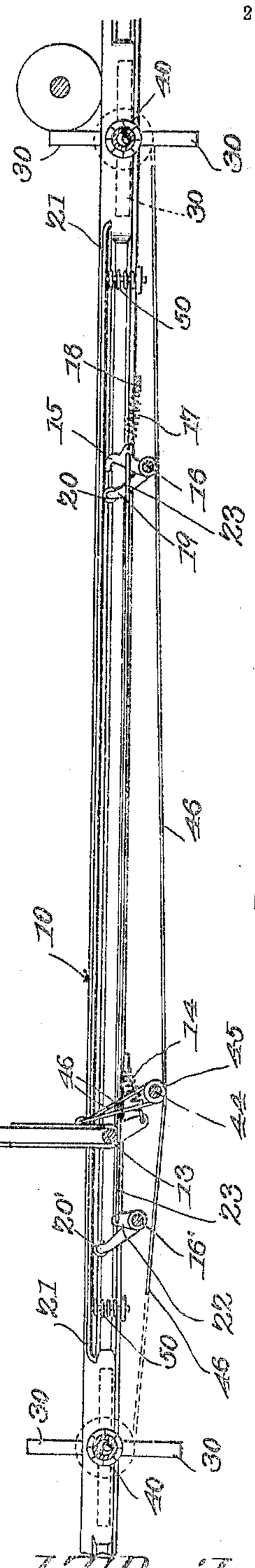

Fig. 2.

Witnesses

E. J. Ellwood

Jno. E. Parker

Samuel T. Bailey, Inventor,

by C. A. Brown & Co.,

Attorneys

No. 793,813. Patented July 4, 1905.

UNITED STATES PATENT OFFICE.

SAMUEL T. BAILEY, OF MOUNT HOPE, WEST VIRGINIA.

MINE-DOOR-OPERATING DEVICE.

SPECIFICATION forming part of Letters Patent No. 793,813, dated July 4, 1905.

Application filed March 27, 1905. Serial No. 252,247.

To all whom it may concern:

Be it known that I, SAMUEL T. BAILEY, a citizen of the United States, residing at Mount Hope, in the county of Fayette and State of West Virginia, have invented a new and useful Mine-Door-Operating Device, of which the following is a specification.

This invention relates to devices of that class employed for operating mine doors, gates, and similar obstructions extending across a railway-track.

The principal object of the invention is to provide a mechanism of simple construction by which a car approaching the door in either direction will automatically open said door and lock the same in open position until the passage of one car or any number of cars coupled together in the form of a train.

A further object of the invention is to provide a mechanism of such construction that after the first opening movement of the door the operating devices engaged by the successive wheels of the car or train will move idly without transmitting any movement to the door until all of the cars have passed the doorway.

With these and other objects in view, as will more fully hereinafter appear, the invention consists in certain novel features of construction and arrangement of parts hereinafter fully described, illustrated in the accompanying drawings, and particularly pointed out in the appended claims, it being understood that various changes in the form, proportions, size, and minor details of the structure may be made without departing from the spirit or sacrificing any of the advantages of the invention.

In the accompanying drawings, Figure 1 is a plan view of a mine-door-operating mechanism constructed in accordance with the invention. Fig. 2 is a longitudinal sectional elevation of the same substantially on the line 2 2 of Fig. 1. Fig. 3 is a transverse sectional view of the same, on an enlarged scale, on the line 3 3 of Fig. 1. Fig. 4 is a detail sectional view of one of the wheel-engaged operating members on the line 4 4 of Fig. 1, the view being on an enlarged scale.

Similar numerals of reference are employed to indicate corresponding parts throughout the several figures of the drawings.

The rails 10 are of the usual character, except that one rail is provided with vertically-disposed slots 11 for the reception of operating mechanism hereinafter described. The door 12 is pivoted on a transversely-disposed rock-shaft 13 and is of any ordinary type, being held in vertical position by one or more coiled tension-springs 14 and being, as usual, formed of sections fitting between and on the outer sides of the rails. This door can move to open position in but one direction, as indicated by the arrow in Fig. 2, and when opened is disposed in a horizontal plane below the treads of the rails to permit the passage of the car. When the door is moved to the horizontal position, it is engaged and locked by a pair of fingers 15, carried by a transversely-disposed rock-shaft 16, extending between the rails, said fingers being normally held in inoperative position by means of helical tension-springs 17, extending between the fingers and a transverse bar 18. At one end of the rock-shaft is a rocker-arm 19, carrying an antifriction-roller 20, that is engaged by a longitudinal bar or strip 21, adjacent to the inner side of one of the rails in a position to be engaged and depressed by the wheel-flange of a car, and when so depressed the movement is transmitted to the fingers and the latter are moved to door engaging and locking position. To secure uniformity of movement and to permit operation by cars running in either direction, a second rock-shaft 16′ is connected to the first by means of rocker-arms 22 and a rod 23. The second rock-shaft carries an arm 19′, at the outer end of which is a roller 20′, also engaged by the strip 21.

The roadway is provided at points on each side of the door with a bearing 25 and a block 26 for the reception of door-operating devices, the detailed construction of which is more clearly illustrated in Figs. 3 and 4. In each of the bearings 25 is a shaft 26′, one end of which is extended through a slot 27 in the rail, such slot extending upward from the foot of the rail in order that a shaft may be conveniently introduced therein, and said slot 27 crosses the slot 11 at a right angle. On

the end of the shaft 26′ is secured a head 28, that is provided with diametrically-extending openings 29 for the reception of arms 30, the latter being mortised at the crossing-point and being capable of limited independent play within the openings. These arms extend through the slot 11 above the tread of the rail and are arranged to be engaged by the periphery of the wheel, the movement transmitted to the shaft 26′ being approximately to the extent of ninety degrees for each operation. Inasmuch as the angular distance between two adjacent arms is or may be less than the angle required for the entrance of one of the wheels, the arms are free to play within the openings 29, but normally are held in lines at right angles to each other by means of small springs 30′. If one of the arms, being in a vertical position, (illustrated in Fig. 4,) is being operated upon by a wheel, as shown in dotted lines, the following arm in moving upward will strike against the periphery of the wheel, and if this occurs said arm will yield and compress the spring 30′, so that there will be no danger of the binding of the wheel between two adjacent arms and the resultant damage to the car and operating mechanism. The opposite end of the shaft 26′ carries a sleeve 32, into which fits one end of a fixed spindle 33, the opposite end of which is rigidly secured to a carrying-block 26, and said spindle is provided with peripheral threads 34, on which is mounted the internally-threaded hub of a grooved winding-disk 35, one side of the disk being provided with clutching-teeth 36, preferably four in number. Surrounding the spindle is a helical torsion-spring 37, one end of which is secured to a collar 38, fixed on the spindle, while the opposite end is secured to the winding-disk 35, and this spring normally tends to revolve the disk in the direction indicated by the arrow, Fig. 1. On the shaft 26′ is feathered the hub 40 of a clutch member having teeth adapted to engage the clutch-teeth 36 and normally pressed into engagement therewith by a helical compression-spring 41, the stress of which may be regulated by an adjustable sleeve or collar 42, secured to the shaft 26′, and inward or clutching movement of this member is limited by a stop-pin 43, carried by the shaft. The mechanism at the opposite side of the door is precisely the same as that described, and at a point below and to one side of the door is arranged a shaft 44, having a pair of loose pulleys 45, over which extend flexible connecting members 46, that are secured to the door and to the winding-disk 35.

In operation a wheel engaging one of the arms 30 will move the shaft 26′ approximately to the extent of ninety degrees, and this movement will be transmitted by the shaft to the clutching member 40 and through the clutching teeth 36 to the winding-disk 35, the flexible member 46 being wound on said disk and drawing the door down in the direction indicated by the arrow, the door remaining in this position while the wheel, passing from the arm 30, engages the bar or strip 21 and operates the locking-fingers 15, previously described, and these fingers will hold the door in the open position until the tread of the last wheel passes from the strip, and when this occurs the strip will be elevated by springs 50 and the fingers will be withdrawn by their springs 16, allowing the door to move to closed position under the influence of springs 14.

When the shaft 26′ and clutching member 40 are rotated in the direction indicated by the arrow and disk 35 is moving in the same direction, the disk will be moving outward from the clutch member 40, owing to the mounting of the disk on the threads 34, and just as the limit of movement is reached—that is to say, when the shaft has moved an arcuate distance of ninety degrees—the clutch members will be disengaged, and the torsion-spring 37 will thereupon turn the disk 35 in the reverse direction, winding up the flexible connection 46 until the latter is again taut, the movement stopping when the disengaged teeth 36 have moved to the extent of ninety degrees. The result of this operation is that the door having been opened by the first wheel of the first car will simply remain in open position, while the remaining wheels of the car or train engage and turn the operating-arms 30. When a second or following wheel engages one of the arms 30, the latter will be turned, as before, to the extent of ninety degrees, and the movement will be transmitted, through the shaft 26′ and clutch member 40, to the clutch-teeth 36, turning the disk 35, but the latter in this case merely winding up the slack of the flexible connection 34, which it has let out on the previous movement, and at the completion of the taking up of the slack, which occurs when the disk is moved to the extent of ninety degrees, the clutch-teeth will again be disengaged and spring 37 will again operate to reverse the movement of the disk and again slacken the connection, this occurring as many times as there are wheels on the car or train, so that the door when once moved to open position will be locked in that position and will not be moved up and down each time a wheel engages the operating mechanism, as is usual in devices of this character. After a car has passed through the doorway it will engage the operating devices on the opposite side of the door, and this will merely result in the idle turning of the shaft 26′, the teeth of the clutch 40 clicking over the teeth 36, this idle movement of the clutch being permitted by the yielding of the spring 41.

Having thus described the invention, what is claimed is—

1. In mechanism of the class described, the combination with a door, of train-operated

members arranged on opposite sides of the door, means for transmitting movement from both members to the door, and means for holding the door in open position and rendering both transmitting means inoperative after a door-opening movement of either member until an entire car or train has passed beyond the operating means.

2. In mechanism of the class described, the combination with a door, of a wheel-engaged member, means including a flexible connection between said member and the door to effect opening movement of said door, and automatic means for adjusting the parts to successively take up and let out the slack of the connecting member as successive wheels engage the operating device.

3. In mechanism of the class described, the combination with a door, of a shaft, a plurality of arms carried thereby and arranged to be engaged by the wheels of a train or car, means including a clutch for transmitting movement from the shaft to the door, and means for automatically rendering the clutch inoperative after an initial operation, whereby the passage of following wheels will result in idle movement of the parts.

4. In apparatus of the class described, the combination with a door, of a shaft, a plurality of arms carried thereby and adapted to be engaged by the wheels of a car or train, a clutch on the shaft, springs tending to hold the members of the clutch in engagement, a winding-disk connected to one of the clutch members, means for automatically disengaging the clutch member of the winding-disk at the completion of each operative movement, and a flexible connecting means extending between the winding-disk and the door.

5. In mechanism of the class described, the combination with a door, of a shaft, a slotted rail, a plurality of arms carried by the shaft and extending through the slot in a position to be engaged by the wheels of a car or train, a clutching member feathered to the shaft, a second clutching member arranged to engage therewith, a rigid spindle with which the second clutching member has a threaded connection, a winding-disk on the second clutching member, and a flexible connecting means between the door and the disk.

6. In mechanism of the class described, the combination with a door, of a slotted rail, a shaft, a rigid spindle in alinement with the shaft and having a threaded periphery, a plurality of arms carried by the shaft and extending through the slot of the rail in a position to be successively engaged by the wheels of a passing car or train, a spring-held clutching member feathered on the shaft, a second clutching member having a threaded connection with the rigid spindle, a torsion-spring tending to restore the second clutching member to an initial position, a winding-disk on the second clutching member, and a flexible connecting device extending between the winding-disk and the door.

7. In apparatus of the class described, the combination with a door, of an operating mechanism including a shaft having a slotted head, arms extending through said head and arranged to be engaged by the wheels of a passing train, said arms being yieldable in one direction and imparting movement to the head when turned in the opposite direction.

8. In apparatus of the class described, the combination with a door, of train-actuated devices arranged on opposite sides of said door, respectively, shafts forming part of the operating mechanism, toothed clutching members on said shafts, a flexible connecting device extending from the clutching members to the door, the teeth of the clutches being disposed in opposite directions, respectively, whereby movement of a train in either direction will result in an operative movement of the mechanism with which it first engages, and inoperative movement of the second mechanism after passing the door.

9. In mechanism of the class described, the combination with a door, of a holding-finger for retaining the door in open position, a spring tending normally to move the finger to release position, a strip parallel with one of the rails and adapted to be engaged by a wheel-flange, and means for connecting the strip to the finger in order to retain the latter in locking position during the passage of a car or train.

In testimony that I claim the foregoing as my own I have hereto affixed my signature in the presence of two witnesses.

SAMUEL T. BAILEY.

Witnesses:

J. H. JOCHUM, Jr.,

J. ROSS COLHOUN.