No. 782,695. PATENTED FEB. 14, 1905.

J. W. POTTER.

BOTTLE.

APPLICATION FILED SEPT. 27, 1904.

2 SHEETS—SHEET 1.

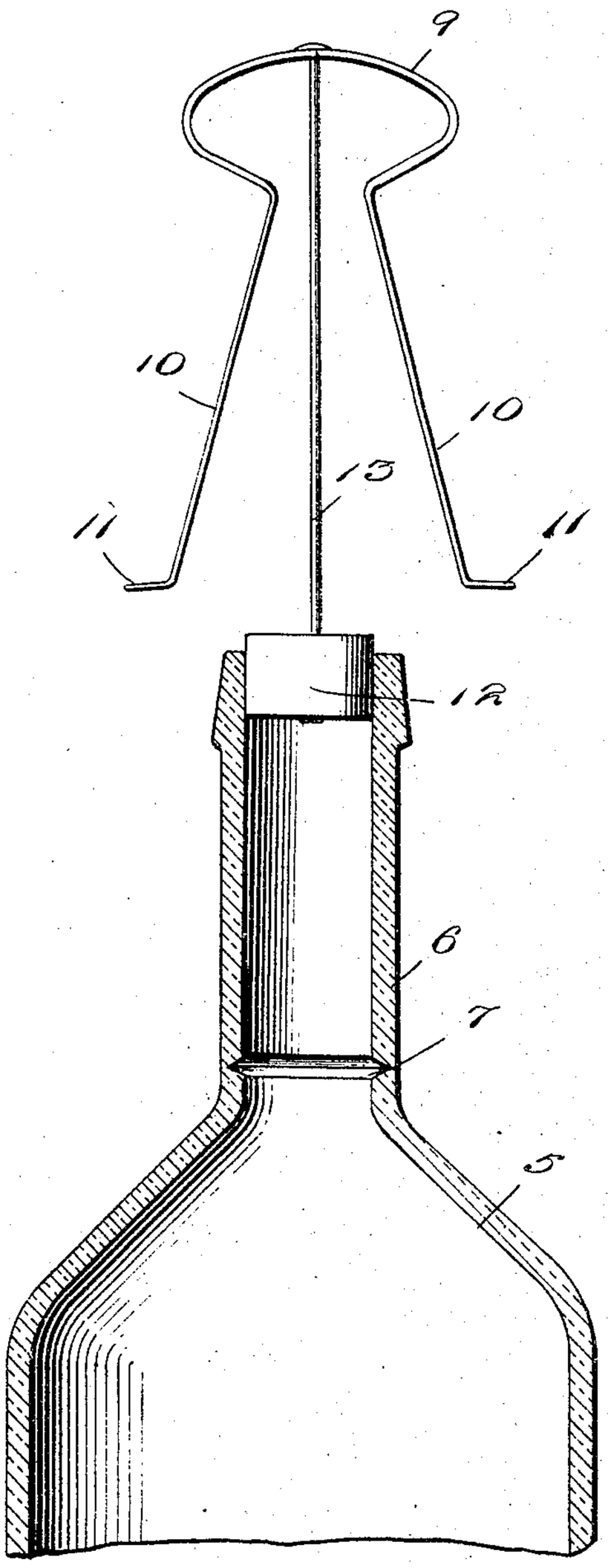

Fig. 1.

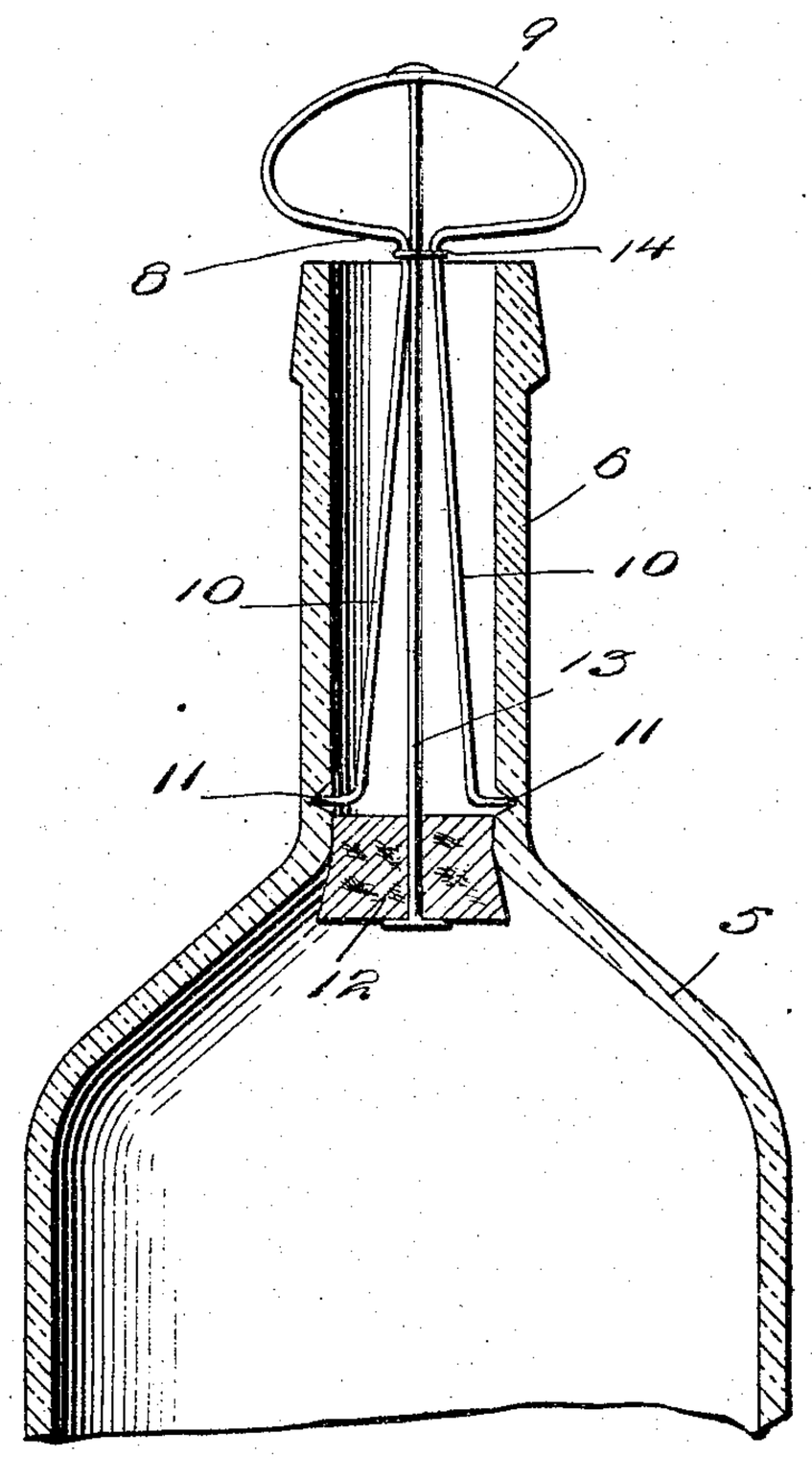

Fig. 2.

Witnesses
A. M. Simpson
H. M. Baldwin.

Inventor
J. W. Potter
By
Crandall & Crandall Attorneys

No. 782,695. PATENTED FEB. 14, 1905.

J. W. POTTER.

BOTTLE.

APPLICATION FILED SEPT. 27, 1904.

2 SHEETS—SHEET 2.

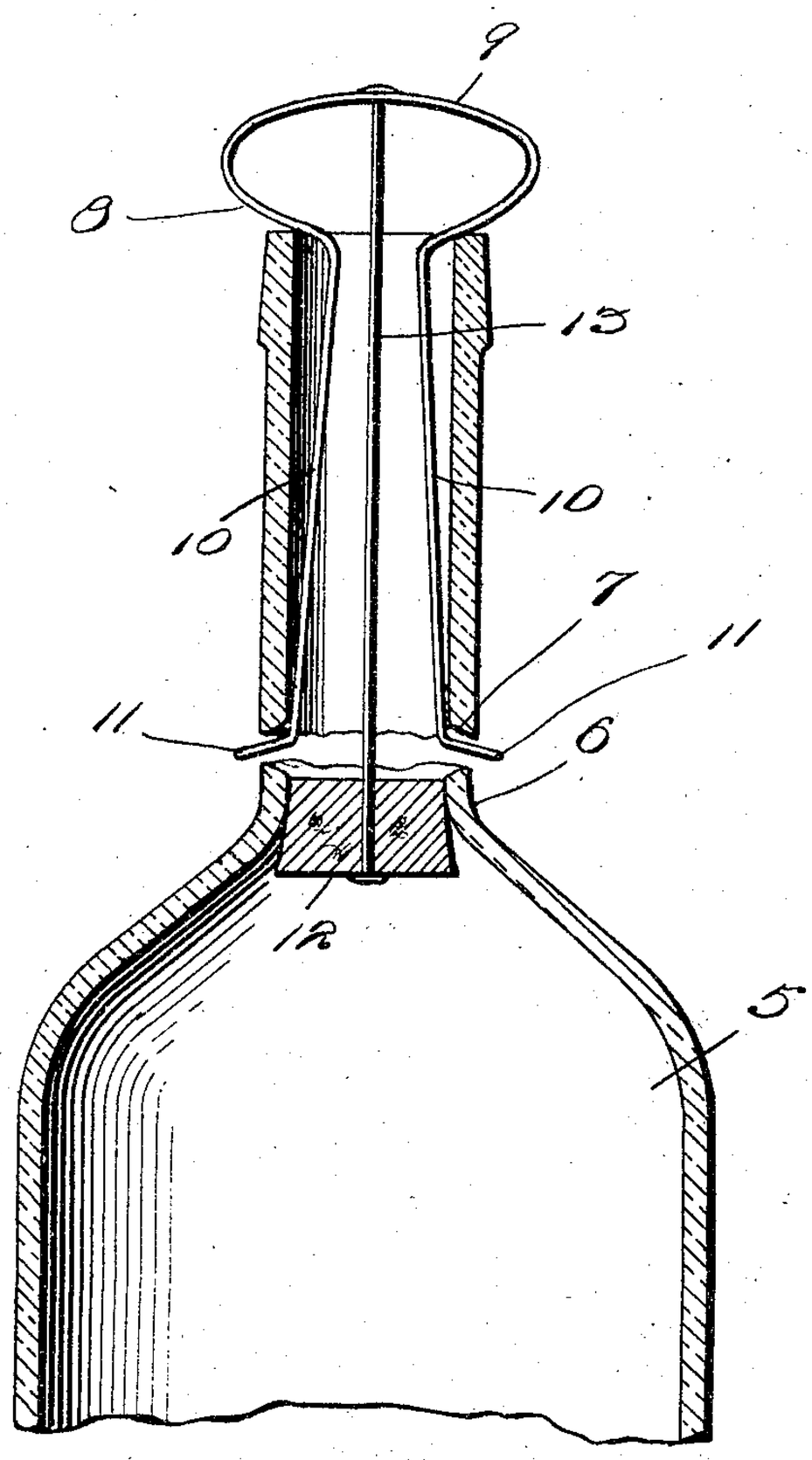

Fig. 3.

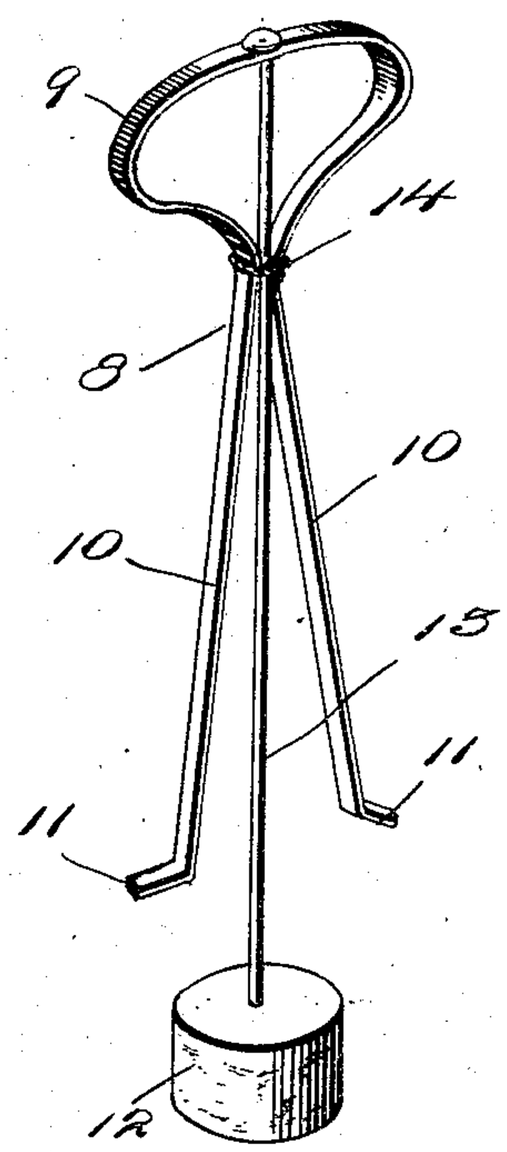

Fig. 4.

Witnesses
Ambinpsen
H. M. Baldwin

Inventor
J. W. Potter
By
Chandlee & Chandlee
Attorneys

No. 782,695. Patented February 14, 1905.

UNITED STATES PATENT OFFICE.

JOHN W. POTTER, OF FLORIEN, LOUISIANA.

BOTTLE.

SPECIFICATION forming part of Letters Patent No. 782,695, dated February 14, 1905.

Application filed September 27, 1904. Serial No. 226,336.

To all whom it may concern:

Be it known that I, JOHN W. POTTER, a citizen of the United States, residing at Florien, in the county of Sabine, State of Louisiana, have invented certain new and useful Improvements in Bottles; and I do hereby declare the following to be a full, clear, and exact description of the invention, such as will enable others skilled in the art to which it appertains to make and use the same.

This invention relates to bottles, and has for its object to provide a device of this nature of the hermetically-sealed type which will be so arranged that the neck of the bottle may be easily broken off and the stopper withdrawn when it is desired to remove the stopper from the bottle.

A further object is to provide a construction in which the means for breaking the bottle-neck also forms a handle by which the stopper may be removed.

Other objects and advantages will be apparent from the following description, and it will be understood that modifications of the specific construction shown may be made and any suitable materials may be used without departing from the spirit of the invention.

In the drawings forming a portion of this specification, and in which like numerals of reference indicate similar parts in the several views, Figure 1 is a longitudinal sectional view of the invention, showing the closure with the stopper inserted in the neck of the bottle. Fig. 2 is a view similar to Fig. 1, showing the tie-wire in position and the bottle ready for shipment. Fig. 3 is a view showing the method of breaking the neck. Fig. 4 is a perspective view of the closure removed from the bottle.

Referring now to the drawings, there is shown a bottle 5, having a neck 6 provided with an interior annular groove 7 adjacent to its lower end. In cross-section the groove 7 is V-shaped for a purpose to be presently described. A locking and cutting member 8 is provided, which is formed from a strip of spring metal, preferably steel, bent into a form of a loop 9, the ends of the strip extending parallel to each other at right angles to one side of the loop in the form of spaced legs 10, the free ends of which are turned outwardly in opposite directions, as shown at 11. As mentioned above, the legs 10 lie normally in spaced relation; but the loop 9 possesses sufficient resilience to permit the legs to be moved toward each other, so that they may be inserted in the bottle-neck, and when thus disposed the outwardly-turned ends 11 rest in the groove 7.

Disposed in the neck below the groove 7 is a cork or other suitable stopper 12, and extending upwardly from the cork, to which it is secured at its lower end, is a rod 13, this rod being secured at its upper end to the upper side of the loop 9, which extends a sufficient distance at either side of the rod to permit of the insertion of the fingers through the loop between the ends thereof and the rod.

It will be apparent that when the different parts of the invention are disposed as just described it will be impossible to remove the stopper 12, by reason of the fact that the ends 11 of the legs 10 are engaged in the groove 7. When it is desired to remove the stopper, however, the loop 9 is struck upon its upper side with any suitable instrument or it may be struck against the under side of a table, the blow causing the lower ends of the legs 10 to separate and to come against the bottom of the groove 7 with such force as to crack the neck from the bottle, after which the fingers may be inserted through the loop 9 and the cork withdrawn.

To prevent breakage of the necks during shipment of the bottles, a tie-wire 14 is passed around the legs 10 just below the loop to prevent separation of the legs, and it will of course be understood that when the bottle is to be opened this tie-wire is removed.

What is claimed is—

1. In a device of the class described, the combination with a bottle having a neck provided with an interior annular groove, of a member comprising spaced legs and a connecting-loop extending laterally beyond the legs, the free ends of the legs being turned outwardly, said legs being disposed within the neck with their outwardly-turned ends engaged in the groove, said loop lying above the neck, a stopper disposed in the neck below the groove and a rod

connected to the stopper and to the upper side of the loop.

2. The combination with a bottle having a neck provided with an interior annular groove, of a cutting member comprising spaced legs and a connecting-loop extending laterally beyond the legs at its ends, the free ends of the legs being turned outwardly in opposite directions, said legs being disposed within the neck with their outwardly-turned ends within the groove, a closure for the neck disposed below the groove, and a tie-wire removably engaged with the legs between the neck and the loop to prevent further separation of the legs.

In testimony whereof I affix my signature in presence of two witnesses.

JOHN W. POTTER.

Witnesses:

S. J. WILLIAMS,

G. L. LEACH.