No. 774,367. PATENTED NOV. 8, 1904.

W. H. SOLEY, DEC'D.

F. SOLEY, ADMINISTRATOR.

PNEUMATIC TOOL.

APPLICATION FILED FEB. 1, 1904.

NO MODEL.

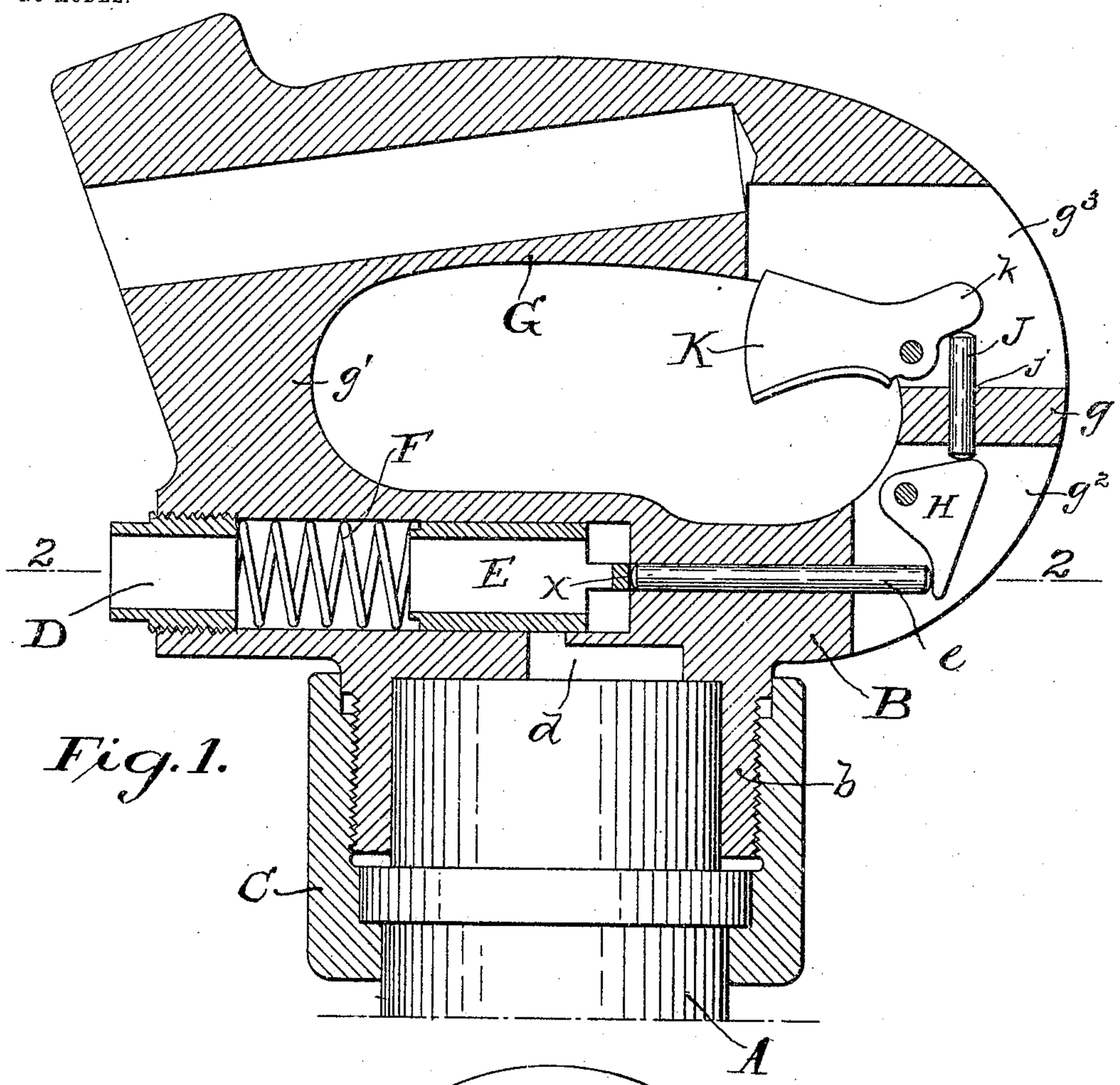

Fig. 1.

Fig. 2.

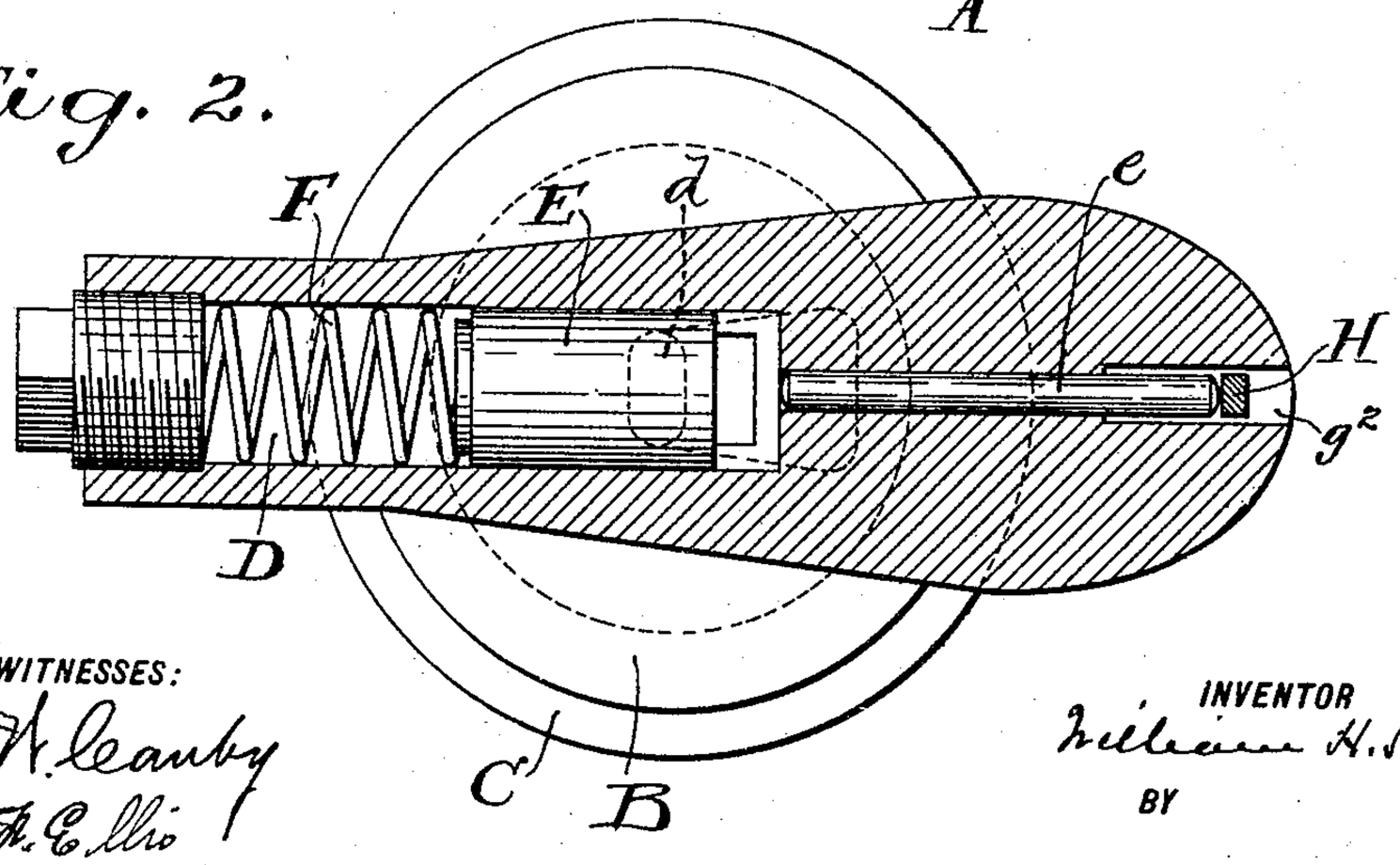

WITNESSES:

H. H. Leamby

M. F. Ellis

INVENTOR

William H. Soley

BY

Harding & Harding

ATTORNEYS

PHOTO-LITHOGRAPHED BY JACKETT & WILHELMS LITHO. & PT'G. CO. NEW YORK.

No. 774,367. Patented November 8, 1904.

UNITED STATES PATENT OFFICE.

WILLIAM H. SOLEY, OF PHILADELPHIA, PENNSYLVANIA, ASSIGNOR OF ONE-HALF TO THOS. H. DALLETT CO., A CORPORATION OF NEW JERSEY; FRANK SOLEY ADMINISTRATOR OF SAID WILLIAM H. SOLEY, DECEASED.

PNEUMATIC TOOL.

SPECIFICATION forming part of Letters Patent No. 774,367, dated November 8, 1904.

Application filed February 1, 1904. Serial No. 191,466. (No model.)

To all whom it may concern:

Be it known that I, WILLIAM H. SOLEY, a citizen of the United States, residing at Philadelphia, county of Philadelphia, and State of Pennsylvania, have invented a new and useful Improvement in Pneumatic Tools, of which the following is a full, clear, and exact description, reference being had to the accompanying drawings, which form a part of this specification.

My invention relates to the construction by which the air is admitted to the tool and its admission controlled.

I will first describe the embodiment of my invention illustrated in the accompanying drawings and then point out the invention in the claims.

In the drawings, Figure 1 is a section through the handle, showing air-inlet passage, throttle-valve, and operative mechanism. Fig. 2 is a sectional plan view as taken on line 2 2, Fig. 1.

A is the body or casing of the tool, having the head-block B. This head-block has the downwardly-projecting portion *b*, which is threaded and works on the threaded locking-ring C. In the head-block is the horizontal open-ended passage D, threaded at its open end for connection with the air-pipe. In this passage is the opening *d* to the interior of the tool. In this passage is the throttle-valve E, controlling the opening *d* and normally held by the spring F so as to cover said opening. The throttle-valve E of the cylinder is hollowed out, so as to have a passage therethrough, and supported at one end by a bridge *x*. The head-block B is preferably formed integral with the handle G, being connected with it by the extensions *g g'*.

e is a rod which at one end is in line with the bridge *x* and extends through a guide formed in the head-block in line with one end of a bell-crank lever H, pivoted and resting in a cut-away portion g^2 of the extension *g*. The other end of this lever H is in line with a pin J, guided in a guide *j*, formed in the extension *g*. The upper end of the pin J is in line with a projecting portion *k* of the trigger K, pivoted and resting in a cut-away portion g^3 of the extension *g*, a portion of the trigger K extending into the space beyond the extension *g*.

In the condition shown in Fig. 1 the throttle-valve has air on both ends of it, substantially holding it in equilibrium, the spring F tending to make certain that the valve is held in the position shown and overcomes the gravity action of the parts H and K. When the operator presses the trigger, the valve is moved so as to uncover the opening *d* and air passes to the tool. As may be seen by the construction and arrangement of the intermediate parts H, J, and K, I am enabled to rapidly open up the passage D and with a short movement of and pressure on the lever K, and thus avoid any slow opening producing wire drawing. With the ordinary construction a rapid opening can be obtained only with an excessive swing of the operating-lever. With this construction the air to be admitted to the tool passes directly through the head-block to the tool without passing through the handle in part or in whole. Moreover, the valve mechanism makes the valve very sensitive, so that the operator can control the admission of air and make gradations both of time and quantity, which is of great advantage in working on certain classes of work.

Having now fully described my invention, what I claim, and desire to protect by Letters Patent, is—

1. In a pneumatic tool, in combination with the tool-casing, of a head-block therefor provided with a passage open at one end adapted to be connected with the air-supply, there being an inlet from said passage opening into the interior of the casing, a valve in said passage, controlling said inlet, said valve having a passage therethrough from end to end in connection with the open end of said passage.

2. In a pneumatic tool, in combination with the tool-casing, of a head-block therefor provided with a passage open at one end adapted to be connected with the air-supply, there being an inlet from said passage opening into

the interior of the casing, a valve in said passage, controlling said inlet, said valve having a passage therethrough from end to end in connection with the open end of said passage, and a spring acting on said valve at the open end of said passage.

3. In a pneumatic tool, in combination with the tool-casing, of a head-block therefor provided with a passage open at one end adapted to be connected with the air-supply, there being an inlet from said passage opening into the interior of the casing, a valve in said passage, controlling said inlet, said valve having a passage therethrough from end to end in connection with the open end of said passage, an operating-lever and intermediate connection between said lever and said valve whereby in the movement of said lever said valve is moved to open said passage.

4. In a pneumatic tool, in combination with the tool-casing, of a head-block therefor provided with a passage open at one end adapted to be connected with the air-supply, there being an inlet from said passage, opening into the interior of the casing, a valve in said passage, controlling said inlet, said valve having a passage therethrough from end to end in connection with the open end of said passage, there being a bridge at one end of said valve, a rod in line with said bridge, a handle, a lever pivoted in said handle and intermediate connection between said lever and said rod whereby, in the operation of said lever, said rod is moved and the valve operated to open said passage to the casing.

5. In a pneumatic tool, in combination, with the tool-casing, of a head-block therefor provided with a passage open at one end, adapted to be connected with the air-supply, there being an inlet from said passage opening into the interior of the casing, a throttle-valve in said passage, a handle, an extension connecting said handle and head-block, a trigger pivoted in said extension, having a portion projecting beneath the handle, and connection between said trigger and said throttle-valve, and a spring acting upon said valve tending to hold it in one position.

6. In a pneumatic tool, in combination, with the tool-casing, of a head-block therefor provided with a passage open at one end, adapted to be connected with the air-supply, there being an inlet from said passage opening into the interior of the casing, a throttle-valve in said passage, a handle, an extension connecting said handle and head-block, a trigger pivoted in said extension, having a portion projecting beneath the handle, a pin acted on by said trigger, a lever, one end acted on by said pin, the throttle-valve stem being in line of movement of the other end of said lever.

7. In a pneumatic tool, in combination, with the tool-casing, of a head-block therefor provided with a passage open at one end, adapted to be connected with the air-supply, there being an inlet from said passage opening into the interior of the casing, a throttle-valve in said passage, a handle, an extension connecting said handle and head-block, a trigger pivoted in said extension, having a portion projecting beneath the handle, a pin acted on by said trigger, a lever, one end acted on by said pin, the throttle-valve stem being in line of movement of the other end of said lever, and a spring acting upon said valve tending to hold it in one position.

8. In a pneumatic tool, in combination, with the tool-casing, of a head-block therefor, provided with a passage open at one end, adapted to be connected with the air-supply, there being an inlet from said passage opening into the interior of the casing, a throttle-valve in said passage, a handle, an extension connecting said handle and head-block, there being a cut-away portion of said extension, a trigger, pivoted in said cut-away portion of the extension, having a portion projecting beneath the handle, a pin acted on by said trigger, there being a second cut-away portion of said extension, a lever, pivoted in said last-mentioned cut-away portion, one end acted on by said pin, the throttle-valve stem being in line of movement of the other end of said lever.

9. In a pneumatic tool, in combination, with the tool-casing, of a head-block therefor provided with a passage open at one end, adapted to be connected with the air-supply, there being an inlet from said passage opening into the interior of the casing, a throttle-valve in said passage, a handle, an extension connecting said handle and head-block, there being a cut-away portion of said extension, having a portion projecting beneath the handle, a pin acted on by said trigger, there being a second cut-away portion of said extension, a lever, pivoted in said last-mentioned cut-away portion, one end acted on by said pin, the throttle-valve stem being in line of movement of the other end of said lever, and a spring acting upon said valve tending to hold it in one position.

In testimony of which invention I have hereunto set my hand, at Philadelphia, on this 29th day of January, 1904.

WILLIAM H. SOLEY.

Witnesses:

M. M. HAMILTON,

WILLIAM B. MARKS.