No. 771,313. PATENTED OCT. 4, 1904.

C. E. LOMBARD.

ELECTRIC SWITCH.

APPLICATION FILED SEPT. 19, 1903.

NO MODEL.

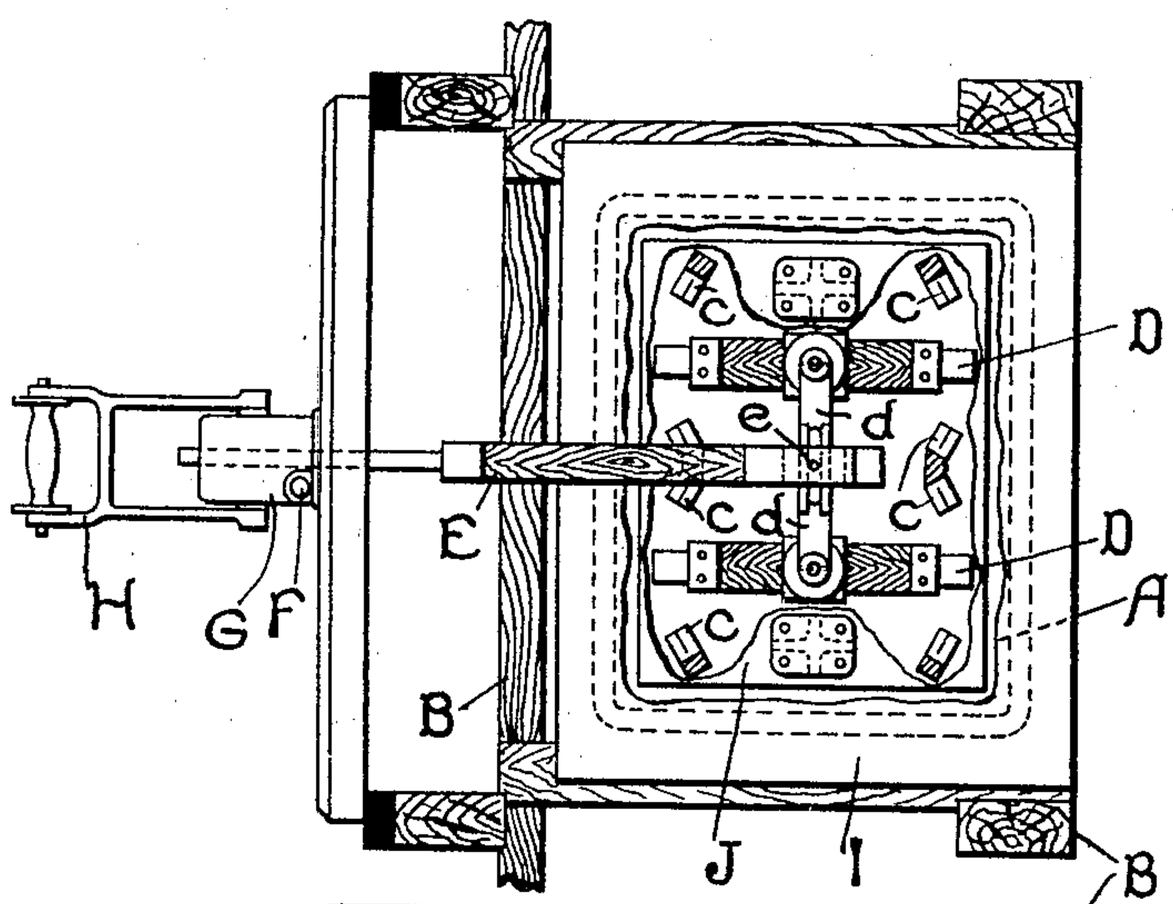

Fig. 1.

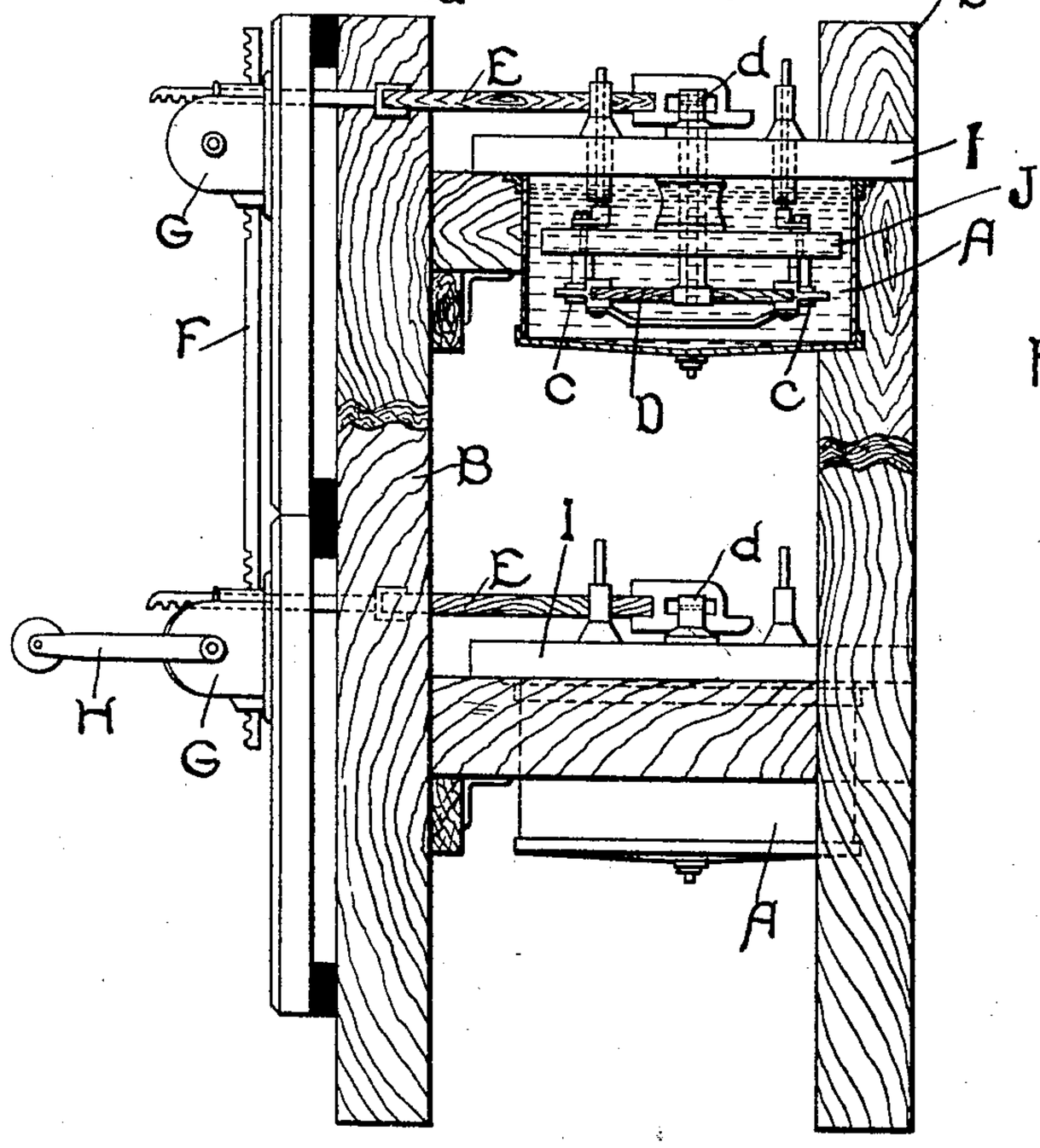

Fig. 2.

WITNESSES:

Wm. H. Jones

R. E. Haymond.

INVENTOR.

Charles E. Lombard.

BY L. A. Hawkins

ATTORNEY.

No. 771,313. Patented October 4, 1904.

UNITED STATES PATENT OFFICE.

CHARLES E. LOMBARD, OF PITTSFIELD, MASSACHUSETTS, ASSIGNOR TO STANLEY ELECTRIC MANUFACTURING COMPANY, OF PITTSFIELD, MASSACHUSETTS, A CORPORATION OF NEW JERSEY.

ELECTRIC SWITCH.

SPECIFICATION forming part of Letters Patent No. 771,313, dated October 4, 1904.

Application filed September 19, 1903. Serial No. 173,767. (No model.)

To all whom it may concern:

Be it known that I, CHARLES E. LOMBARD, a citizen of the United States, and a resident of Pittsfield, Massachusetts, have invented certain new and useful Improvements in Electric Switches, of which the following is a specification.

My invention relates to electric switches, and particularly to switches for the purpose of interrupting electric circuits carrying currents of high potential. If it is attempted to break such a circuit in air, serious arcing results, which burns the switch-contacts. This not only reduces the life of the switch, but prevents good electrical contact when the switch is again closed. It has been found that by immersing the switch-contacts in oil or other insulating fluid the arc is much more quickly interrupted and far less damage is done to the switch. Accordingly oil-switches have been used for some time for breaking electric circuits carrying current of high potential.

The object of my invention is to provide a switch of this character which shall be more efficient in extinguishing the arcs and which shall at the same time require a smaller amount of oil than in the case of such switches as ordinarily built.

Referring to the drawings, Figure 1 shows a plan view of a switch constructed in accordance with my invention, part of the cover-plate being broken away. Fig. 2 shows a side elevation of the same, partly in cross-section.

A A represent tanks or reservoirs for oil, which are supported by the frame B. *c c* are contacts submerged in the oil and adapted to be engaged by the movable switch members D D. These switch members are pivoted at their center and carry rigidly attached to themselves the arms *d d*. These arms *d d* are slotted at their ends, and the slots are engaged by pin *e*. Pin *e* is carried by the longitudinally-movable rod E. Rods E E are given their longitudinal movement by the handle H, which carries on its shaft a gear engaging the lower rod E and the vertical rod F, which in turn engages a gear in upper gear-case G, which in turn engages upper rod E. Thus as handle H is moved either up or down rods E E are moved forward or back, turning members D D on their pivots and causing them to engage with either set of contacts *c c*.

By pivoting the switch members D D at their centers by vertical pivots I secure two breaks of the circuit by each of switch members D, these breaks all being in a horizontal direction. I have found that an arc produced by a horizontal break in oil is much more quickly extinguished than an arc produced by a vertical break, since in the former case the oil tends to lift the arc in a direction at right angles to its length and quickly extinguishes it.

I is a slab of marble or other insulating material covering the tank A and protecting the oil from dust, &c. J is another horizontal plate of insulating material which is submerged in the oil above the contacts *c c*. This plate J is placed at a sufficient distance above contacts *c c* to allow the arc to be carried upward freely by the oil, so that it may be quickly extinguished; but it prevents the splashing at the surface of the oil which is caused by the arc in switches as ordinarily constructed unless the depth of oil is very great. Thus by the use of this horizontal plate J, I am able to use a shallow oil-reservoir, while at the same time permitting the arc to be carried upward by the oil, and thus securing the benefit of the horizontal break which I have provided.

I do not desire to limit myself to the particular construction and arrangement of parts here shown, since changes therein which do not depart from the spirit of my invention and which are within the scope of the appended claims will be obvious to those skilled in the art.

Having thus fully described my invention, I claim as new and desire to protect by Letters Patent—

1. In combination, a reservoir containing oil, contacts submerged therein, a pivoted switch member movable in a horizontal plane

and adapted to engage said contacts, and a longitudinally-movable rod adapted by its movement to operate said switch member.

2. In combination, a reservoir containing oil, contacts submerged therein, a horizontal plate having its lower surface submerged in the oil above said contacts, a horizontally-movable switch member adapted to engage said contacts, and a rod adapted by its longitudinal movement to operate said switch member.

3. In combination, a reservoir containing oil, contacts immersed therein, a pivoted switch member movable in a horizontal plane and adapted to engage said contacts, an arm carried by said member, a longitudinally-movable rod, and a pin carried by said rod and engaging said arm.

Signed at Pittsfield, Massachusetts, this 14th day of September, 1903.

CHARLES E. LOMBARD.

Witnesses:

L. A. HAWKINS,

E. L. WHITEHEAD.