No. 754,637. PATENTED MAR. 15, 1904.

K. BIRKELAND.

ELECTROMAGNETIC GUN.

APPLICATION FILED JAN. 2, 1902.

NO MODEL. 6 SHEETS—SHEET 1.

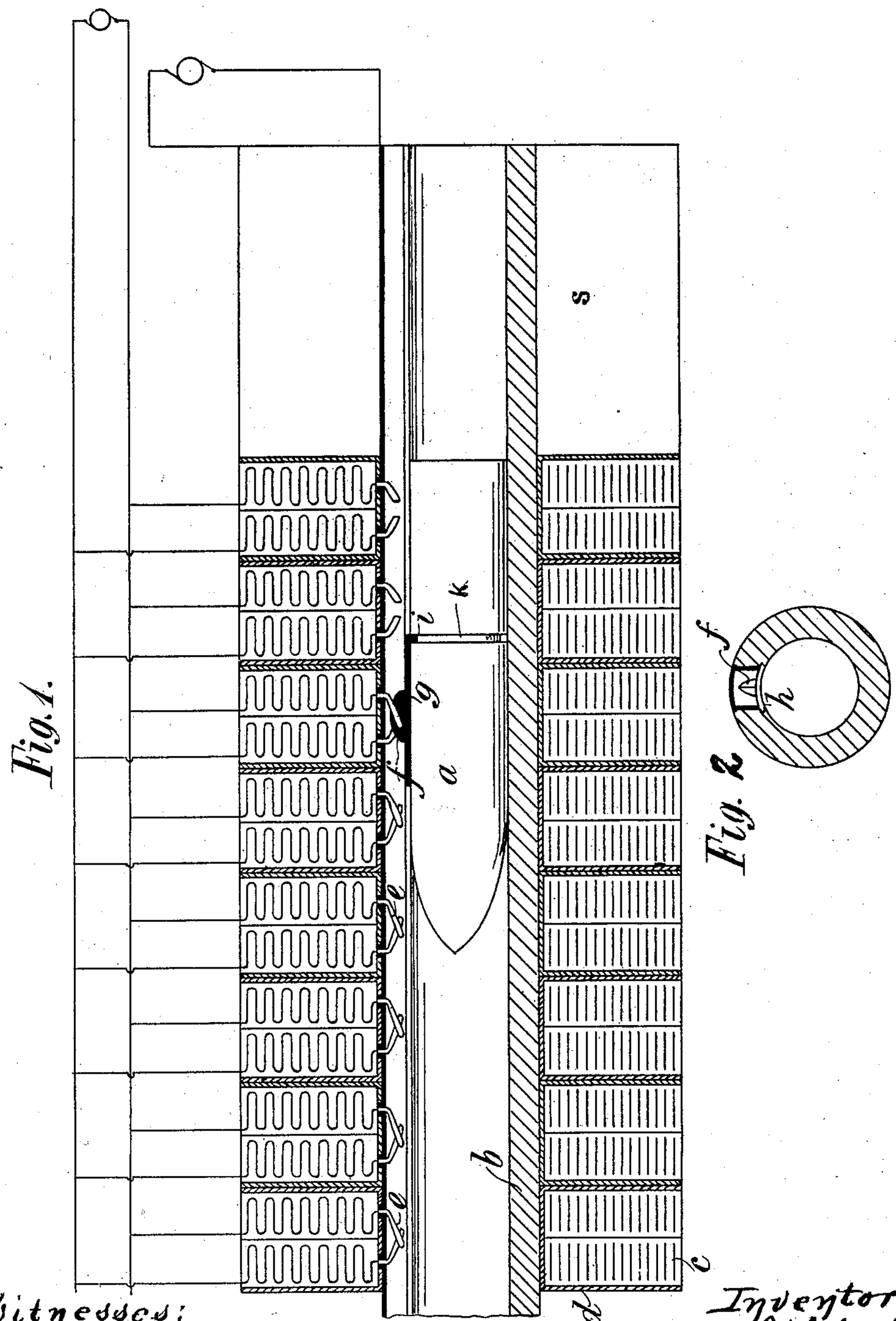

Witnesses:
Anton Gloetzner
M. C. McBride

Inventor:
Kristian Birkeland
by Max J. Vogel
his Attorney

THE NORBIS PETERS CO., PHOTO-LITHO., WASHINGTON, D. C.

No. 754,637. PATENTED MAR. 15, 1904.

K. BIRKELAND.

ELECTROMAGNETIC GUN.

APPLICATION FILED JAN. 2, 1902.

NO MODEL. 6 SHEETS—SHEET 2.

Fig. 3.

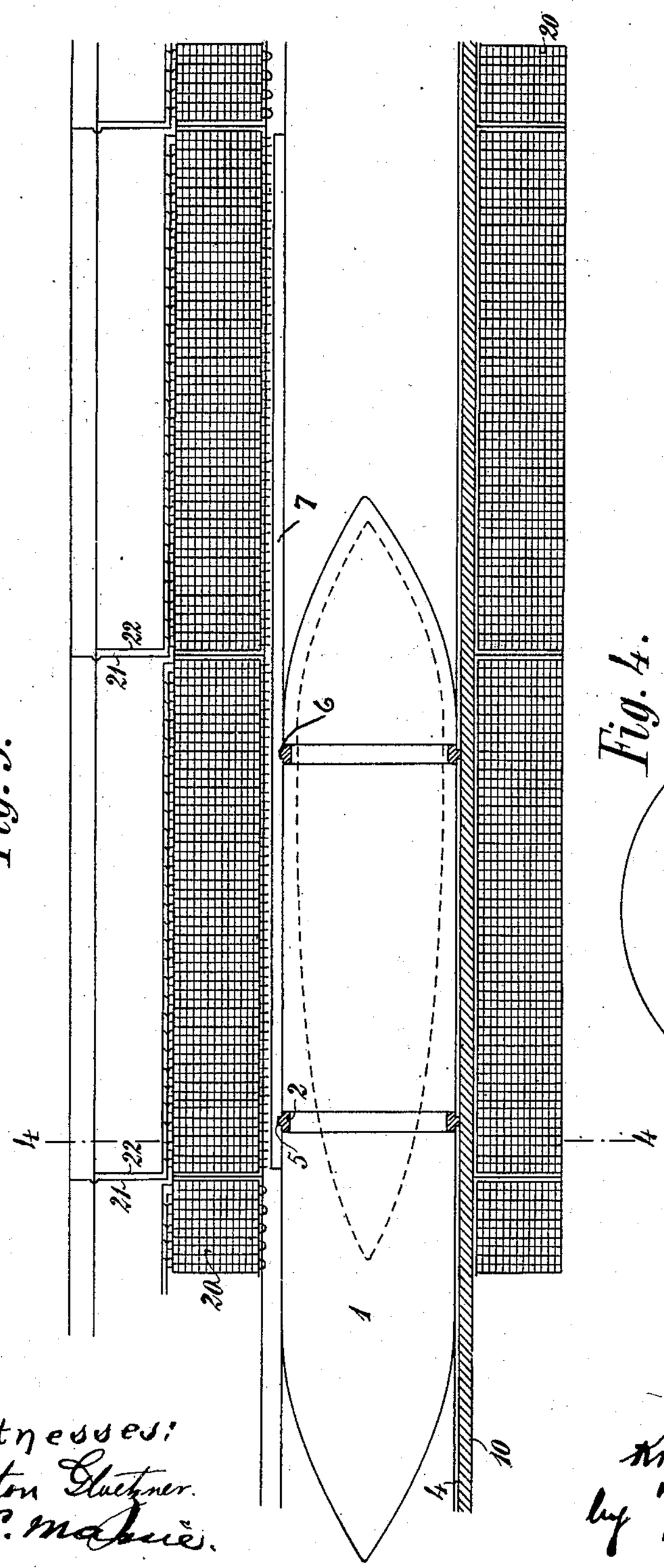

Fig. 4.

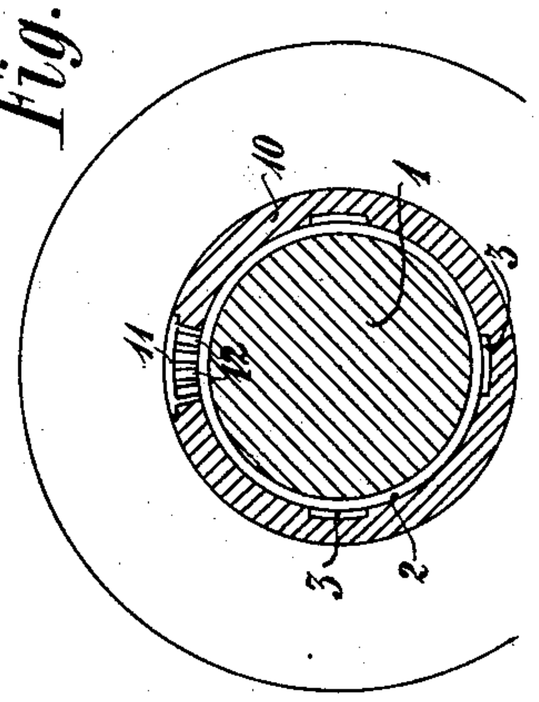

Witnesses:
Anton Gluetzner.
M. C. Makie.

Inventor:
Kristian Birkeland
by Matt Magill
his Attorney

THE NORRIS PETERS CO., PHOTO-LITHO., WASHINGTON, D. C.

No. 754,637. PATENTED MAR. 15, 1904.

K. BIRKELAND.

ELECTROMAGNETIC GUN.

APPLICATION FILED JAN. 2, 1902.

NO MODEL. 6 SHEETS—SHEET 3.

Fig. 5.

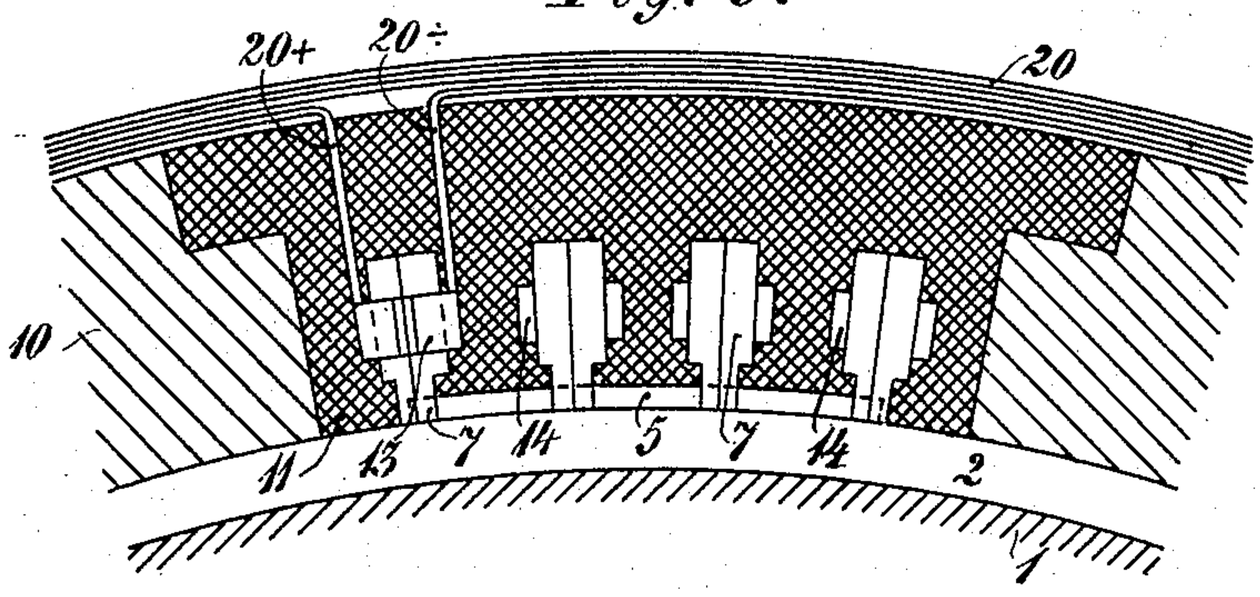

Fig. 6.

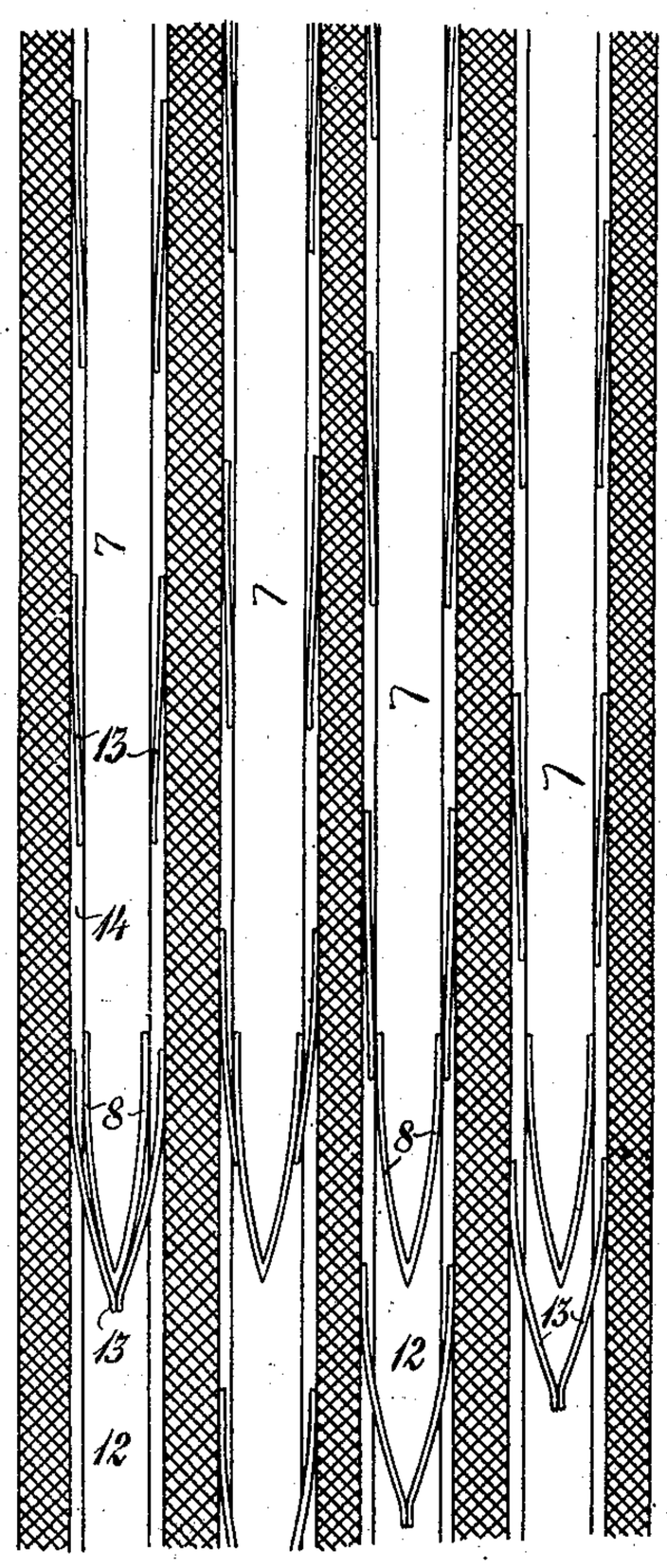

Witnesses:
Anton Gluetner
M.C. Mahaney

Inventor:
Kristian Birkeland
by Max Pracht
his Attorney.

THE NORRIS PETERS CO., PHOTO-LITHO., WASHINGTON, D. C.

No. 754,637. PATENTED MAR. 15, 1904.

K. BIRKELAND.

ELECTROMAGNETIC GUN.

APPLICATION FILED JAN. 2, 1902.

NO MODEL. 6 SHEETS—SHEET 4.

Fig. 7.

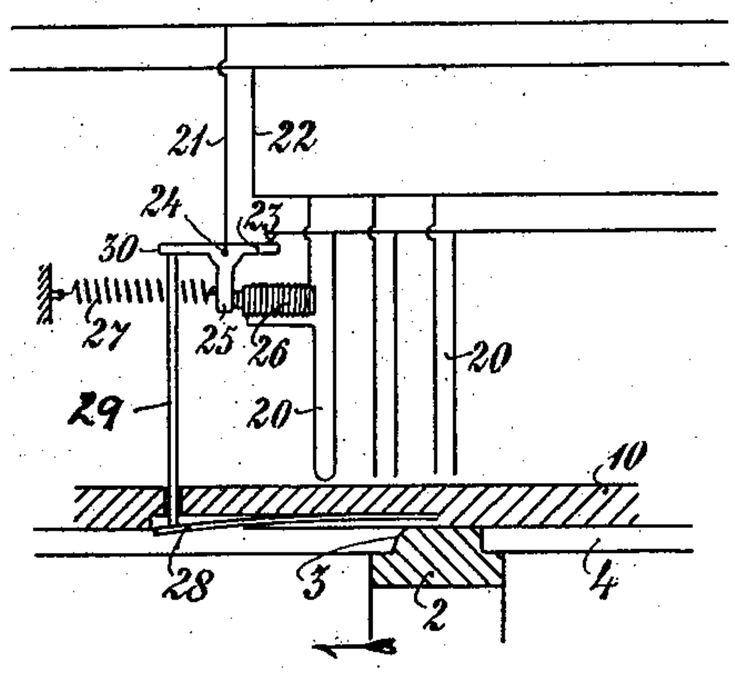

Fig. 8.

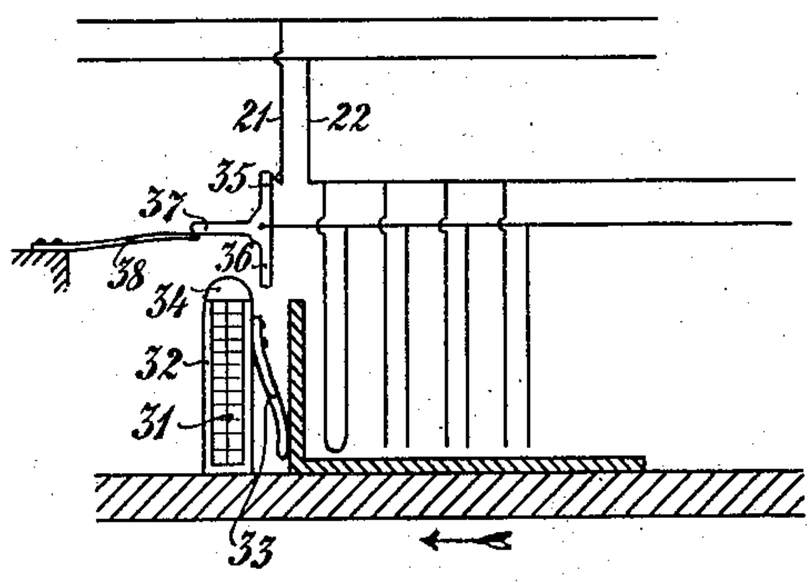

Fig. 9.

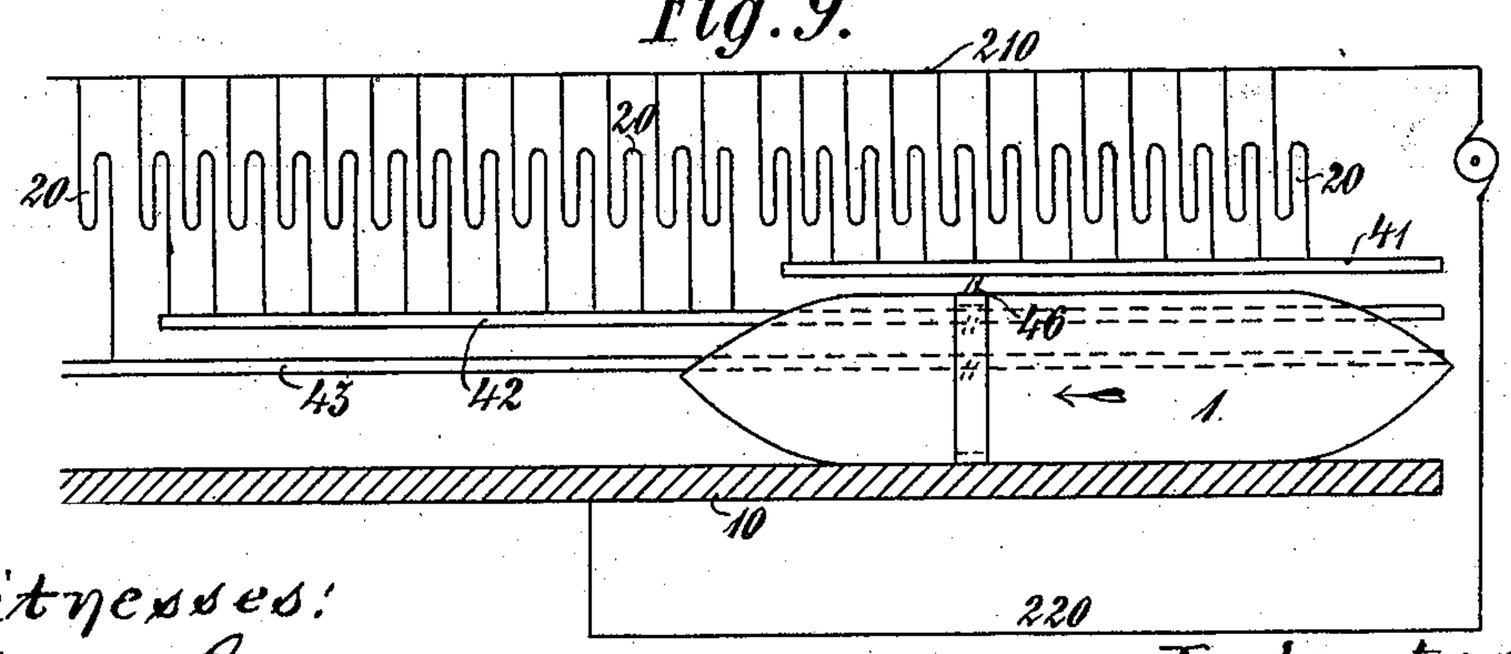

Witnesses:
Anton Gluetzner,
M. C. Massie.

Inventor,
Kristian Birkeland,
by Max J. Arzu
his Attorney.

THE NORRIS PETERS CO., PHOTO-LITHO., WASHINGTON, D. C.

No. 754,637. PATENTED MAR. 15, 1904.

K. BIRKELAND.

ELECTROMAGNETIC GUN.

APPLICATION FILED JAN. 2, 1902.

NO MODEL. 6 SHEETS—SHEET 5.

Fig. 10.

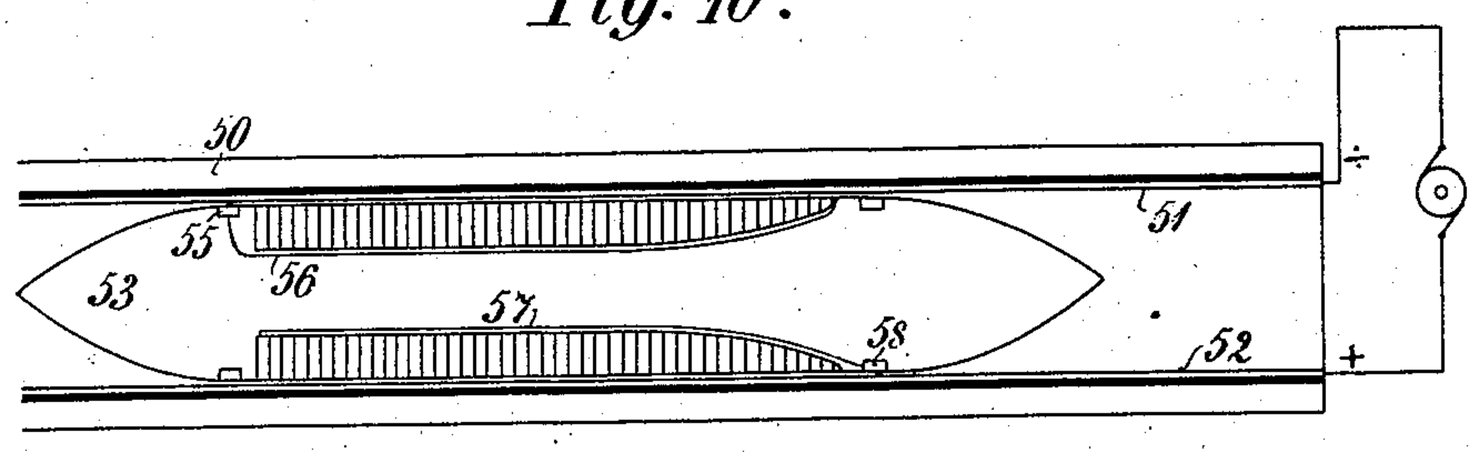

Fig. 11.

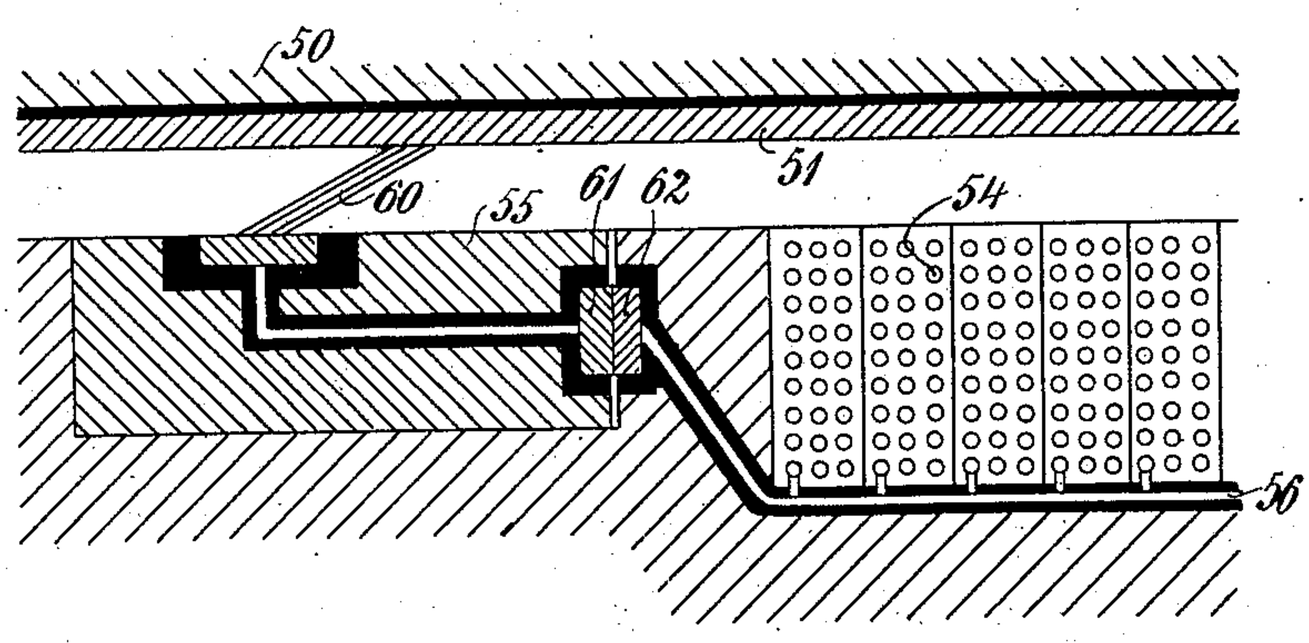

Witnesses:
Anton Gloetzner.
M. C. McKenzie

Inventor:
Kristian Birkeland,
by Mat. J. Magill
his Attorney

THE NORRIS PETERS CO., PHOTO-LITHO., WASHINGTON, D. C.

No. 754,637. PATENTED MAR. 15, 1904.

K. BIRKELAND.

ELECTROMAGNETIC GUN.

APPLICATION FILED JAN. 2, 1902.

NO MODEL. 6 SHEETS—SHEET 6.

Fig. 12.

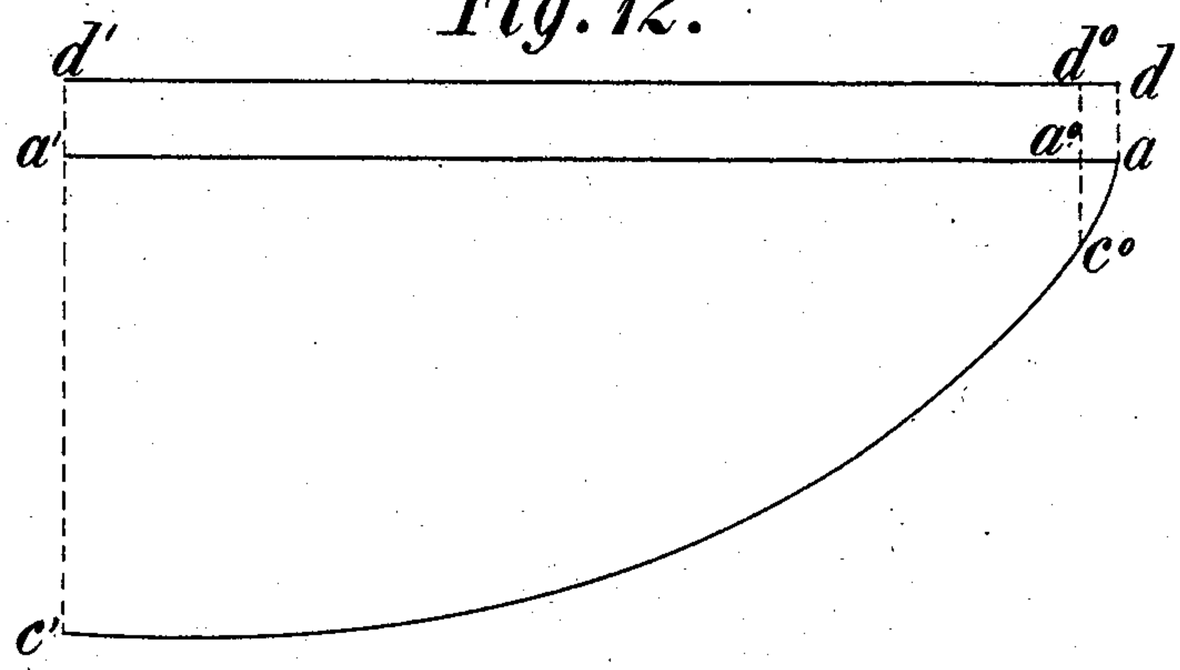

Fig. 13.

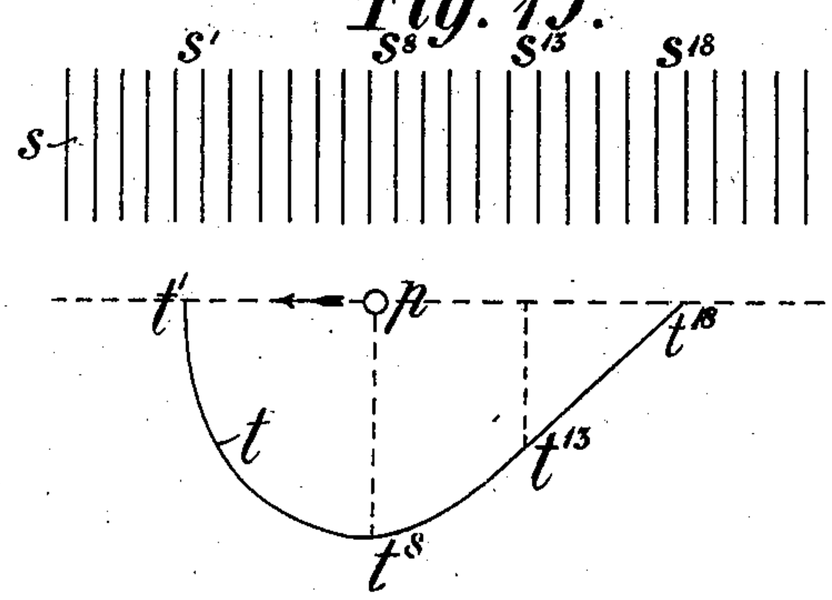

Fig. 14.

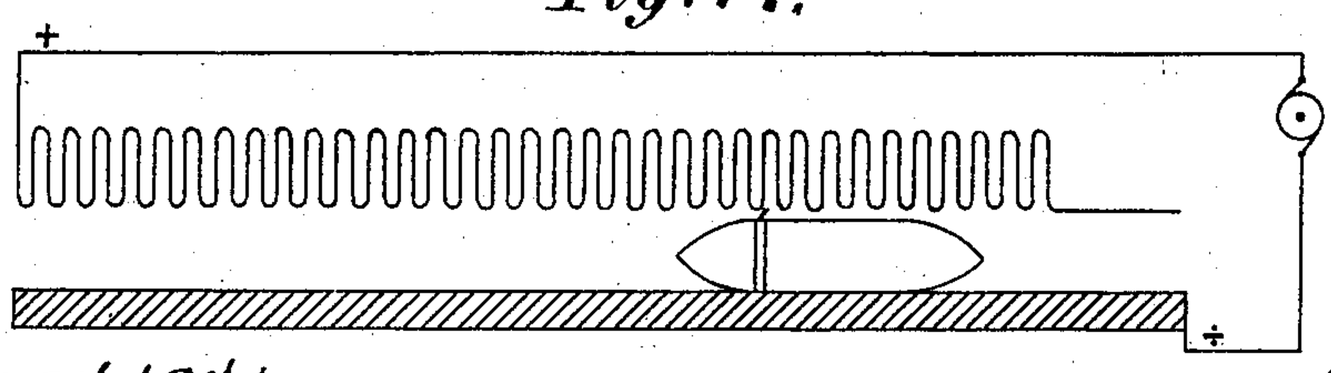

Witnesses:
Anton Gloetzner,
M. C. Mauzé.

Inventor:
Kristian Birkeland
by Max Pracht
his Attorney

THE NORRIS PETERS CO., PHOTO-LITHO., WASHINGTON, D. C.

No. 754,637. Patented March 15, 1904.

UNITED STATES PATENT OFFICE.

KRISTIAN BIRKELAND, OF CHRISTIANIA, NORWAY.

ELECTROMAGNETIC GUN.

SPECIFICATION forming part of Letters Patent No. 754,637, dated March 15, 1904.

Application filed January 2, 1902. Serial No. 88,189. (No model.)

To all whom it may concern:

Be it known that I, KRISTIAN BIRKELAND, a subject of the King of Sweden and Norway, residing at Christiania, Norway, (whose post-office address is the same,) have invented certain new and useful Improvements in Electromagnetic Guns; and I do hereby declare the following to be a full, clear, and exact description of the invention, such as will enable others skilled in the art to which it appertains to make and use the same, reference being had to the accompanying drawings, and to letters and figures of reference marked thereon, which form a part of this specification.

The present invention relates to an electromagnetic gun.

It has heretofore been considered practically impossible to construct an electromagnetic gun—that is to say, to produce a gun of this kind which would throw a service projectile with service velocities—because of the fact that the modern methods of electrical calculation would indicate that in order to obtain service velocities with service projectiles an enormous number of windings would be required, thus involving the use of a barrel whose length would be prohibitory. I have found, however, that it is practicable to construct a gun of this kind which will meet all service requirements and which will have many advantages over the usual powder-guns.

My invention is based upon the fact that the magnetic effect of a current is a function of the current only, while the rate of increase of the temperature of a coil carrying such current depends upon a number of factors other than the current. As a result of this the magnetic effect of a current in a coil will attain a maximum in advance of the temperature of the coil. Consequently, as I have observed, an enormous magnetic effect may be obtained in a practical manner by supplying an abnormally heavy current to a coil and then cutting off the current from the coil before the temperature of the said coil has reached such a point as to injure or destroy the coil. I have found, for instance, that an iron rod having a length of about ten inches and a sectional area of one square inch when placed about midway in a solenoid of the same length weighing about twenty-four pounds and having an inner diameter of nearly two miles and an outer diameter of four and one-half inches was drawn into the solenoid with a force of about one hundred and seventy pounds, when a current of two hundred and thirty amperes was sent through the solenoid. The heat generated in the coil at the end of one second after the current was turned on was not so great but that the solenoid would have safely withstood ten times as heavy a current for one-tenth of a second, in which case the force acting upon the rod would be about seventeen hundred pounds per square inch. Furthermore, the above calculation is based upon the supposition that the iron rod in the above experiment was saturated with magnetism. If this be not the case, the magnetic force produced by the multiplied amperage would be still geater relatively. A calculation shows that a single pole of the said iron rod when saturated with magnetism should be drawn into the solenoid with a force of about two hundred and sixty-two pounds by a current of two hundred and thirty amperes in the solenoid. If instead of an iron rod a body made up of coils through which a current is passed is made use of, the suction of the solenoid may be made far greater. In the description hereinafter when the term "projectile" is employed this is to be understood to be either an iron rod or a body of coils arranged in some suitable way.

The above-named facts I utilize in constructing a gun in which the projectile is thrown by aid of electromagnetism, the gun-barrel being arranged as a tube of sufficient length surrounded by solenoids. Means is provided for supplying these solenoids with an abnormally heavy current—that is to say, a current beyond the capacity of the solenoid as calculated by the methods now in vogue with electrical engineers for determining the safe carrying capacity of a coil—and means is also provided for cutting off the current from the solenoids before the said current has had time to raise the temperature of the solenoid to a point sufficient to destroy it. The control of the cutting out of these solenoids may be effected by aid of circuit-breakers ar-

ranged outside the gun; but I prefer effecting the cutting out of the solenoids automatically by aid of the projectile itself, the projectile acting during its passage through the gun-barrel directly or indirectly upon a series of circuit-breakers. This cutting out of the solenoids behind the projectile should be arranged in such a way that there is always a suitable average distance between the projectile and the active solenoids. In this connection it should be remembered that sparking of the circuit-breakers may be counteracted and eventually totally prevented by the contrary tension or counter electromotive force induced by the projectile in the gun-solenoids, which contrary tension or counter electromotive force may be made to act at the moment of breaking the circuit, so that the current at this moment actually has no energy. The circuit-breaking devices should therefore be arranged so as to be also in conformity herewith. As to eventual sparks, it must be remarked that all such are at once blown out by the immense draft resulting from the projectile motion in the gun-barrel.

This invention is especially adapted to throwing projectiles containing large quantities of high explosives, it being possible in this way to put the projectile into motion and increase the driving force until the desired initial velocity is reached, whereupon the force may be decreased gradually, so that all sudden shocks of the projectile thereby are avoided.

My invention will now be described in connection with the accompanying drawings, in which—

Figure 1 is a diagrammatic view of the rear portion of a gun embodying my invention, and Fig. 2 a detail cross-section of the barrel. Fig. 3 represents a longitudinal section through part of a gun in which a projectile is moving. Fig. 4 is a cross-section on the lines 4 4, Fig. 3. Fig. 5 is an enlarged cross-section through the part of the tube which carries the circuit-breakers. Fig. 6 is a sectional plan of the same. Figs. 7 and 8 are diagrams showing two different forms of automatic main circuit-breaking arrangements. Fig. 9 is a diagram showing a third form of automatic main circuit-breaking arrangement. Fig. 10 is a diagram of a solenoid projectile. Fig. 11 is a sectional view of a detail of the same. Figs. 12 and 13 are diagrams illustrating the manner in which the current is cut off from the solenoids to avoid destructive sparking, and Fig. 14 a diagrammatic view of another embodiment of my invention.

Before describing in a detailed manner the electrical and mechanical constructions preferably made use of when carrying out my invention I shall explain the general idea in a more concrete form, reference being had to Figs. 1 and 2 of the annexed drawings.

Fig. 1 of the accompanying drawings shows a diagram of the breech end of a gun. Fig. 2 is a cross-section. The projectile *a*, which is shown as being an iron projectile, has just begun its passage through the gun tube or barrel. This tube, which may suitably be made of bronze or steel, is slotted on one side along its whole length, as shown in the sectional view Fig. 2, and surrounded by solenoids *c*. The solenoids are connected in series by two, and each group of two solenoids is arranged on a reel *d*, threaded on the barrel-tube *b*. The elementary solenoids of each reel are connected with each other in the way shown in the diagram Fig. 1, the connection at the inside of the solenoids consisting of contact-arms *e*, extending into the above-named slot of the barrel-tube. In order to facilitate the understanding of the diagram, the pairs of contact-arms are shown arranged longitudinally instead of laterally. The said pairs of contact-arms may be separated, and thereby the group of solenoids to which they belong cut out by aid of a wedge-shaped nose *f*, carried by a slider *g*, made of an insulating material. The said slider, carrying the wedge-shaped nose *f*, slides in suitable guides *h*, provided in the inside surface of the barrel-tube, and, being provided with a rib *i* on its back end, is carried along with the projectile, the latter having a circumferential groove *k*, into which the said rib *i* fits. In the position of parts shown in the diagrammatical view Fig. 1 the nose is just severing the contact-arms of the third group of solenoids, thereby cutting out this group. In order to saturate the projectile (if it be of iron) with magnetism before it begins its passage through the gun-barrel, I may arrange on the back end of the gun-tube an electric coil *s* with a separate current source. During this saturating process the projectile may be put into rotation by the aid of a motor having its driving-shaft loosely coupled with the back end of the projectile.

It will be evident that I may carry out my invention in a great many different ways without departing from the principles thereof. In the embodiment which has now been explained only for the sake of illustrating the principle of the invention it was assumed that from the beginning current was flowing through all of the solenoids. I may, however, also modify my invention so as to send current through the solenoids in front of the projectile just in time before the projectile passes. I may make use of solenoids connected in parallel, or I may arrange groups of solenoids in which the elementary solenoids are in series while the groups are connected in parallel, or the whole set of solenoids may be connected in series, so that a continual winding is obtained. The necessary energy may be obtained from a system of generators constructed especially for this purpose. These generators may be provided with large fly-wheels, while the driving machinery may be given relatively small

dimensions. A system of ten such dynamos, each of which in the moment in which they are short-circuited, for instance, produces three thousand volts and thirty thousand amperes, would be sufficient to deliver power to a whole battery of the largest guns. A part of the kinetic energy of the fly-wheels would at the moment of closing the gun-circuit be instantly transmitted to the projectile. Also accumulators might be used as a current source for all sorts of these electromagnetic guns. A battery of accumulators for this purpose would in certain cases be of great importance, in that by use of such it would be possible in a limited space of time to throw a great many projectiles. Acucmulators endure a relatively large number of short-circuitings within a limited space of time. A battery of accumulators might, therefore, be kept in dry condition, so that they could be filled and formed in the course of a few days, when the occasion for their use requires.

If suitable current sources are used having very low internal resistance, a gun of large caliber may be constructed by means of a solenoid made up of relatively few windings of a continuous copper wire. This wire (which might be of square cross-section) should preferably have such dimensions as to make the resistance of the windings about the same as the internal resistance of the current source and so that the projectile when passing through the gun induces sufficiently-great counter electromotive force to make the commercial efficiency satisfactory. Out of a battery of accumulators for this purpose a current of one hundred thousand amperes by two thousand volts may easily be taken. One pole of the battery may, for instance, be connected with the bronze tube and the other pole with the winding at the front end of the gun, and the short-circuiting of the accumulator through the winding may in this case preferably be caused by means of a contact-piece which electrically connects the inner side of the winding with the bronze tube. This manner of carrying out the invention is illustrated in the diagram Fig. 14, which explains itself. In this case the windings that counteract the motion of the projectile are cut out from behind at the proper moment, thereby avoiding the formation of sparks. Only when the projectile leaves the mouth of the gun will there be formed a spark, which is blown out. The insulations may be so constructed that the gun will withstand considerable heating. This kind of gun is especially suitable when a solenoid projectile is used capable of setting up a very great counter electromotive force in the solenoids of the gun. This may be so arranged that this counter electromotive force at the moment the projectile leaves the gun makes the solenoids of the gun approximately free from current, so that the final breaking of the current may be effected without difficulty. If the gun is to be very long, it may be suitable to divide the said continuous coil into two or more coils arranged one behind the other and in parallel with the source of current. As above mentioned, the front end of the continuous coil or coils is connected with the source of current. The back end is open. If the coil is divided in two or more coils, the back ends of each of these coils are carried rearwardly along the gun to its back end, where they are open. The said contact-piece slides along these ends, so that all of them will be in circuit at the starting of the projectile. In order to avoid a shock at the moment the projectile leaves the tube, the solenoids may be so arranged that the force exerted on the projectile decreases as the latter approaches the exit.

I will now proceed to explain the nature of some of the mechanical and electrical arrangements which I preferably make use of in carrying out my invention.

In the form of gun illustrated in Figs. 3 and 4 of the drawings the solenoids 20 are arranged in groups of, say, three hundred in each group. The elementary solenoids of these groups are connected in parallel to the mains 21 22. Each of the solenoids is provided with a current-breaker, and I prefer to cut the wire in the middle of each solenoid and connect the ends with springs arranged in slots near the inside of the gun-tube, as will hereinafter be fully described. 10 is the tube of the gun, preferably made of bronze or steel. It is provided with a longitudinal slot along its whole length, and this slot is filled with a block 11 of insulating material. In this block are provided four grooves 12, in which the current-breakers or contact-springs 13 are secured. The reason why more than one groove is made use of is that I am able, in this manner, to obtain so large a distance between the consecutive pairs of springs that they may be given a suitable length. As shown, I arrange the springs in four rows, with insulating material between each row, so that the distance between the contact-springs in each row will be four times the length of each solenoid. This will be clearly seen from Fig. 6. 20 + and 20 ÷ are the above-mentioned ends of the solenoid, which are carried down through the insulating-block to the springs 13, which are preferably placed in recesses 14 in the sides of the grooves 12. The projectile 1 is provided with two or more rings 2, placed in annular grooves in the projectile. These rings, in which the projectile may rotate, (as in journals,) are provided with three peripheral lugs 3, which fit into longitudinal guide-grooves 4 in the barrel-tube, and with a fourth lug 5, the peripheral length of which corresponds with the distance between the external sides of the outermost grooves 12. 7 represents long rods or slides of insulating material, one fitting into each of the

said grooves 12 and provided with notches 6, that fit over the said lug 5 on each of the rings 2. It will be seen that when the projectile moves forward the lugs 5 will take the slides 7 along through their respective grooves. At the forward end these slides are key-shaped and provided with a covering 8 of conducting material. The action of these slides on the contact-springs will be clearly understood from Fig. 6. When the projectile has left the barrel, the slides will drop off. The length of the same is preferably made so it will be somewhat longer than the length of each group of three hundred (or other number) solenoids. The slides hold the contacts broken in the whole length of the slide, and the same is preferably so placed on the projectile that the solenoids are cut out some distance in front of the middle of the projectile. In Fig. 3 the contact-springs are not shown; but it is indicated in a clear way which of the solenoids are closed and which open. As shown, the solenoids behind the slide are closed as the projectile passes forward. On account of the time it will take for the springs to go together after the slide has passed, the solenoids will be open some time after the passage of the projectile, even if the slide is not made so long as shown. In order to cut off the current for the part of the gun behind the projectile, I may make use of circuit-breakers placed in the mains leading to each group of three hundred solenoids and arrange these circuit-breakers in such manner that the current in each group is broken just at the moment the last solenoid of a group has been cut out by the opening of its spring-contact 13.

One manner of affecting the automatic opening of the main circuit-breakers is illustrated in Fig. 7. In this figure a diagram of the electrical connections is shown in connection with a part of a longitudinal section through the gun-barrel along one of the above-mentioned guide-grooves 4, in which a lug 3 on one of the rings 2 is moving. In the main 21 is arranged a circuit-breaking arm 23, which swings on the center 24 and is provided with an arm 25, serving as armature for the electromagnet 26. The winding of the latter is connected with the last one of a group of solenoids, so that as long as this solenoid is closed, as shown, the electromagnet will attract the arm 25, and thereby hold the circuit 21 22, closed by means of the arm 23. A spring 27, secured to the arm 25, tends to draw the same away from the electromagnet, and will do this, and thereby open the main circuit as soon as the last solenoid has been opened. In order, however, that this opening shall be as nearly instantaneous as possible, I prefer to make use of the following auxiliary arrangement: On the inside of the groove 4 is secured a spring 28, which on its free end carries a pin or pusher-rod 29, passing out through the gun-barrel and its surrounding solenoids and ending in contact with an arm 30 on the circuit-breaker 23. When the lug 3 passes the said spring 28, it will cause the pusher-rod 29 to be pressed against the arm 30, and thereby give the arm the necessary impulse, so that the spring 27 may be able to effect the withdrawal of the armature 25 rapidly.

Another manner of effecting the automatic breaking of the main circuit-breakers is illustrated in Fig. 8. In this instance I make use of the recoiling action of one of the solenoids in each group. I place one of the solenoids 31 in a separate reel 32, which is mounted loosely on the gun-barrel, so that it may move in the axial direction of the gun about as much as one-fourth or one-half of an inch between two neighboring solenoids, springs 33 being utilized to hold the solenoid in its normal forward position. 34 is a lug on the outside of solenoid. 35 is the circuit-breaker, it being provided with an arm 36, extending downward behind the said lug 34, and with another arm 37, against which a spring 38 acts, so as to hold the breaker in its closed position. When the projectile moves on and approaches the solenoid 31, the recoil of the latter will overcome the tension of the spring 33, so that the solenoid will move backward, and thereby the lug 34 will hit the arm 36, and the arm 37 will thereby be pressed down past the end of the spring 38, so that the circuit 21 22 will be opened. Of course it will be most preferable to arrange a set of four or more circuit-breakers symmetrically around the solenoid. A third manner of effecting this automatic breaking of the main circuit-breakers is illustrated in Fig. 9. In this instance I make use of the gun-barrel itself as a stationary contact, to which one end of the main conductor is connected, and of the projectile as a movable contact-piece. In Fig. 9, 41 42 represent copper rods mounted on the inside of the gun-barrel, insulated from the latter and from each other. Of these rods there are as many as there are groups of solenoids, and each of them extends from the rear end of the gun to the end of the group to which it belongs. To these rods are connected the leading-in wires of each solenoid of the respective group, as indicated, while the other leading-in wire of each solenoid is connected to the main 210. The other main 220 is connected with the gun-barrel. The projectile carries brushes 43, which are in contact with all of the rods 41 42, &c. It will be seen that the brushes will establish a circuit through the projectile 1, the barrel 10, conductors 220 210, solenoids 20, and conductor-rods 41 42, &c., and, as the projectile moves, one after the other of these rods and the solenoids connected therewith will be cut out of the circuit. If it is not desired to have the circuit set up for the whole gun at once, but only successively as it is needed, this result may

be reached by not letting all the rods extend back to the rear end of the gun, but only to some distance in front of the same, according to the solenoid group to which it belongs.

As to the dimensions which may be given to guns constructed according to my invention, the following example may be mentioned. For throwing an iron projectile weighing two tons and containing one thousand pounds nitrogelatin at an initial speed of one thousand feet per second I make use of a gun of a length of about ninety feet, the projectile being about nine feet long and having a diameter of about nineteen inches. The gun-solenoids may be made up of square wire, each solenoid containing seven hundred and twenty windings of a resistance of fifteen ohms. The length of each solenoid is made about three-eighths of an inch and the height (radial dimension) about eight inches. With an electromotive force of three thousand volts this will give a current of two hundred amperes. If the current is set up simultaneously in all the solenoids, (there will be about three thousand elementary solenoids,) this will require altogether six hundred thousand amperes, and the suction acting on the projectile will be about two thousand five hundred pounds per square inch of the cross-sectional area of the projectile. A calculation shows that when a firing is to take place the current should be set up one-seventh of a second before the firing. The projectile is then set free, and it will pass the barrel in the course of one-fifth of a second. The current has then been on the outermost solenoid about one-third of a second. If, however, a construction is used in which all the groups of solenoids are not at once set up, (for instance, in the manner mentioned with reference to Fig. 9,) less than half the current will be used for the same effect, and the generation of heat in the outermost solenoids will be reduced.

As stated, I may also make use of a projectile the body of which consists to a substantial extent of solenoid-windings, through which a current is passed during the passage of the projectile through the barrel. By using a projectile provided with such windings I obtain a multiplied effect. The driving force may in this instance rise to sixteen times that obtained with a projectile of soft iron only. The current may be fed to the coils of the projectile through contact-rods arranged on the inside of the barrel. Fig. 10 is a diagram of a projectile of this kind, showing the electrical connections and arrangements. The projectile is supposed to be constructed as before described or in any other suitable manner as regards the circuit-breaking arrangements, &c. In the diagram, 50 represents the barrel; 51 and 52, contact-rods mounted somewhere on the inside of the barrel, extending the entire length of and insulated from the barrel. 53 is the projectile. It may be made of steel and hollow, so that it can carry explosives. Around the central part of the projectile are placed solenoids 54, constructed, preferably, as short elementary solenoids, which are connected in parallel. The current passes from the conductor 51 through the ring 55, to the wire 56 through the solenoids, to the wire 57 and from this through the ring 58 to the conductor 52. To illustrate how the contacts in the rings 55 and 58 may be arranged, I have shown a section in Fig. 11 through one of these rings. 55 is the ring. In the periphery of the same is placed a contact 60, insulated from the ring and sliding against the conductor 51. On the face of the ring is placed, in an annular groove and insulated from the ring, a contact-ring 61, electrically connected with the contact 60, as shown. A similar contact-ring 62 is placed in a similar manner in the face of the groove in the projectile in which the ring 55 rests, and the rings 61 and 62 are made to be in contact with each other. To this ring 62 the leading-in wire or cable 56 is secured, to which the solenoids 54 are connected in parallel, as before mentioned.

It has been stated above when speaking about the breaking of the current in each of the solenoids that this may be performed without the forming of sparks, because the counter electromotive force induced by the projectile in the solenoids will reduce or entirely counteract the electromotive force of the main current. In order that this very important point may be clearly understood, I will explain more fully the phenomena taking place in the gun, reference being had to the diagram Fig. 12. If the axis $a\ a'$ of the diagram represents the length of the gun, the driving force acting on the projectile at any point of its movement may be represented by a line $d\ d'$, which line, as the driving force at the beginning ($a\ d$) is the same as that at the end, ($a'\ d'$,) will be parallel with the axis. As soon as the projectile has begun its movement it will induce a wave of a contrary tension or counter electromotive force, the maximum value of which will be increasing from "0" to many times as great as the driving force, and this maximum contrary tension or counter electromotive force may therefore be represented by a line $a\ c'$. At a certain point a° the value of said counter electromotive force will have reached that of the driving force—that is to say, $a^{\circ}\ c^{\circ}$ will be equal to $a^{\circ}\ d^{\circ}$—and from this point it will be seen that it will be possible to break the current without sparks being formed. The induced counter electromotive force will set up an opposed current the intensity of which will depend upon the said counter electromotive force and the time in which it acts—that is to say, the time which the magnetic pole takes to pass the solenoid in question. As this time will be so much the less the nearer the projectile is to the mouth of the gun, where the counter electromotive force is so much greater, it will be found by calculation that the opposed current will be

about the same about the beginning of the movement at a° as at the end. In the example of gun hereinbefore described when a current of two hundred amperes is made use of the opposed current will be about ninety amperes, so that the driving-current at the moment of breaking will be about one hundred and ten amperes. The line $a\ c'$ in the diagram just referred to represents, as mentioned, the maximum counter electromotive force in each solenoid. This maximum counter electromotive force will be reached just when the forward magnetic pole of the projectile passes the solenoid—that is to say, when the windings of the solenoid are traversed by a maximum of lines of force in a unit of time.

Referring to the diagram Fig. 13, s represents a succession of solenoids, and p the forward pole of the projectile moving in the direction of the arrow. The curve t will then represent the counter electromotive force produced by the forward pole in the solenoids embraced by the curve at the moment considered. In the solenoid s^8 the counter electromotive force will be greatest, and it would therefore be most advantageous in regard to the avoiding of sparks to break the circuit at this point; but this, however, is not economical, because the said solenoid is still exerting a pull on the iron mass of the projectile. Hence the breaking will most advantageously be performed about at the point t^{13}. At said point a considerable reduction of the counter electromotive force has taken place; but it will nevertheless be at least as great as the driving force. The breaking at this point is, however, at all events more advantageous, as the opposed current will be stronger at this point than at the point when the counter electromotive force has its maximum on account of the time necessary for setting up the current—that is to say, owing to the lag of the current behind the impressed electromotive force. Also as regards the question of economy it will be an advantage to let the opposed current grow up to the intensity of the driving-current. I may, however, in some instance make use of a special method for causing the maximum of counter electromotive force to act at the moment of breaking the circuit, in that I establish a transfer of counter electromotive force from the solenoid s^8 to the solenoid s^{13}. Such transfer may be effected by small contact-pieces carried by the circuit-breaking rod of the projectile and establishing momentarily electric connection between the solenoid from which the current is to be cut off (s^{13}) and that one of the preceding solenoids having at that moment the maximum counter electromotive force (s^8). If the counter electromotive force were great enough, as when employing solenoid projectiles, then it would be able to set up an opposed current of such intensity that the total current would be "0" in the moment of breaking the circuit. In this case the projectile would in a very short time have consumed all the electrical energy which had been used to set up the current in the windings. This fact is of great importance for the question of economy. I might increase the self-induction in the solenoids by placing soft-iron rods on the outside of the gun, whereby the energy required for setting up the current would be greatly increased and whereby so much more energy could in this way be disposed of in each of the elementary solenoids—that is to say, by being transferred to the projectile at the moment it passed the solenoid.

Having thus fully described my invention, what I claim as new, and desire to secure by Letters Patent, is—

1. In an electromagnetic gun, the combination, with a gun-barrel, a plurality of solenoid-windings surrounding said barrel, and means for supplying current to said windings, of a series of circuit-closers arranged to close the circuit of the respective windings, a projectile arranged to move inside the gun-barrel and progressively generate a counter electromotive force in the solenoid-windings, and means for progressively opening the circuit-closers of the respective windings, each at that moment when the induced counter-current in its corresponding winding is substantially equal to the current produced by the direct electromotive force in the same.

2. In an electromagnetic gun, the combination, with a gun-barrel, a plurality of solenoid-windings surrounding said barrel, and means for supplying current to said windings, of a series of circuit-breakers arranged to close the circuit of the respective windings, a projectile arranged to move inside the gun-barrel and progressively generate a counter electromotive force in the windings, and means operated by the projectile and arranged to progressively open the circuit-breakers of the respective windings, each at that moment when the induced counter-current in the winding is substantially equal to the current produced by the direct electromotive force.

3. The combination, with a barrel provided with a longitudinal slot, a plurality of solenoid-windings surrounding the barrel and means for energizing said windings, of a strip of insulating material mounted in said slot and a plurality of circuit-breakers connected to said solenoids and mounted on said strip.

4. In an electromagnetic gun in combination, solenoid-windings, a barrel, a longitudinal slot in the barrel, a block of insulating material in the slot, a groove on the inside of the block in the whole length of the barrel and circuit-breakers in the groove said circuit-breakers being electrically connected with the solenoid-windings.

5. In an electromagnetic gun, in combination, a barrel of non-magnetic material, a longitudinal slot in the barrel, a block of insu-

lating material in the slot, parallel grooves in the block in the whole length of the barrel, elementary solenoids placed on the barrel and connected with the source of electricity, and circuit-breakers in the grooves of said block, serving to close and open the circuit of each solenoid or group of solenoids.

6. In an electromagnetic gun, in combination, a barrel, a longitudinal slot in the barrel, a block of insulating material in the said slot, elementary solenoids placed on the barrel, circuit-breakers mounted on the block, and serving to close and open the circuit of each solenoid, and electrical connections between groups of solenoids and the source of electricity and circuit-breakers in the said electrical connection.

7. In an electromagnetic gun the combination, with the projectile, the barrel and a block of insulating material placed in a longitudinal slot in the whole length of the barrel, of a rod or rods of insulating material fitting into a groove or grooves in the said block and means whereby said rod or rods are loosely attached to the projectile during its passage through the barrel, said rod or rods acting to separate the circuit-breakers placed in said groove or grooves.

In witness whereof I have hereunto set my hand in presence of two witnesses.

KRISTIAN BIRKELAND.

Witnesses:

ALFRED J. BRYN,
JOH. VAALER.