No. 743,828. PATENTED NOV. 10, 1903.

L. CHRISTENSON.

REVOLVING METALLIC WINDOW.

APPLICATION FILED MAR. 18, 1903.

NO MODEL. 3 SHEETS—SHEET 1.

Fig. 1.

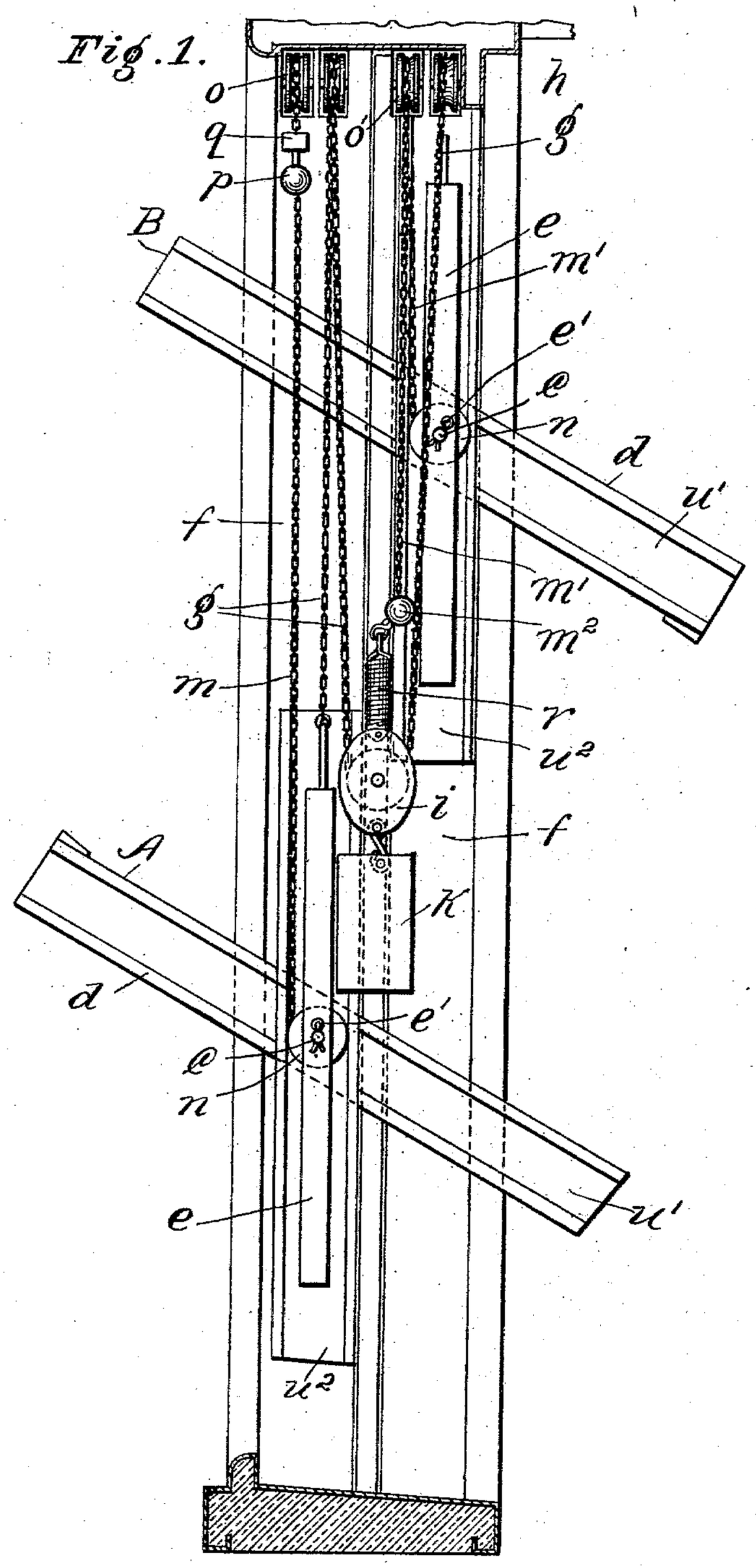

Witnesses
J. M. Howard.
A. Bedgurck

Inventor
Lars Christenson
By his Attorney
A. O. Thayer.

THE NORRIS PETERS CO., PHOTO-LITHO., WASHINGTON, D. C.

No. 743,828. PATENTED NOV. 10, 1903.

L. CHRISTENSON.

REVOLVING METALLIC WINDOW.

APPLICATION FILED MAR. 18, 1903.

NO MODEL. 3 SHEETS—SHEET 2.

Fig. 2.

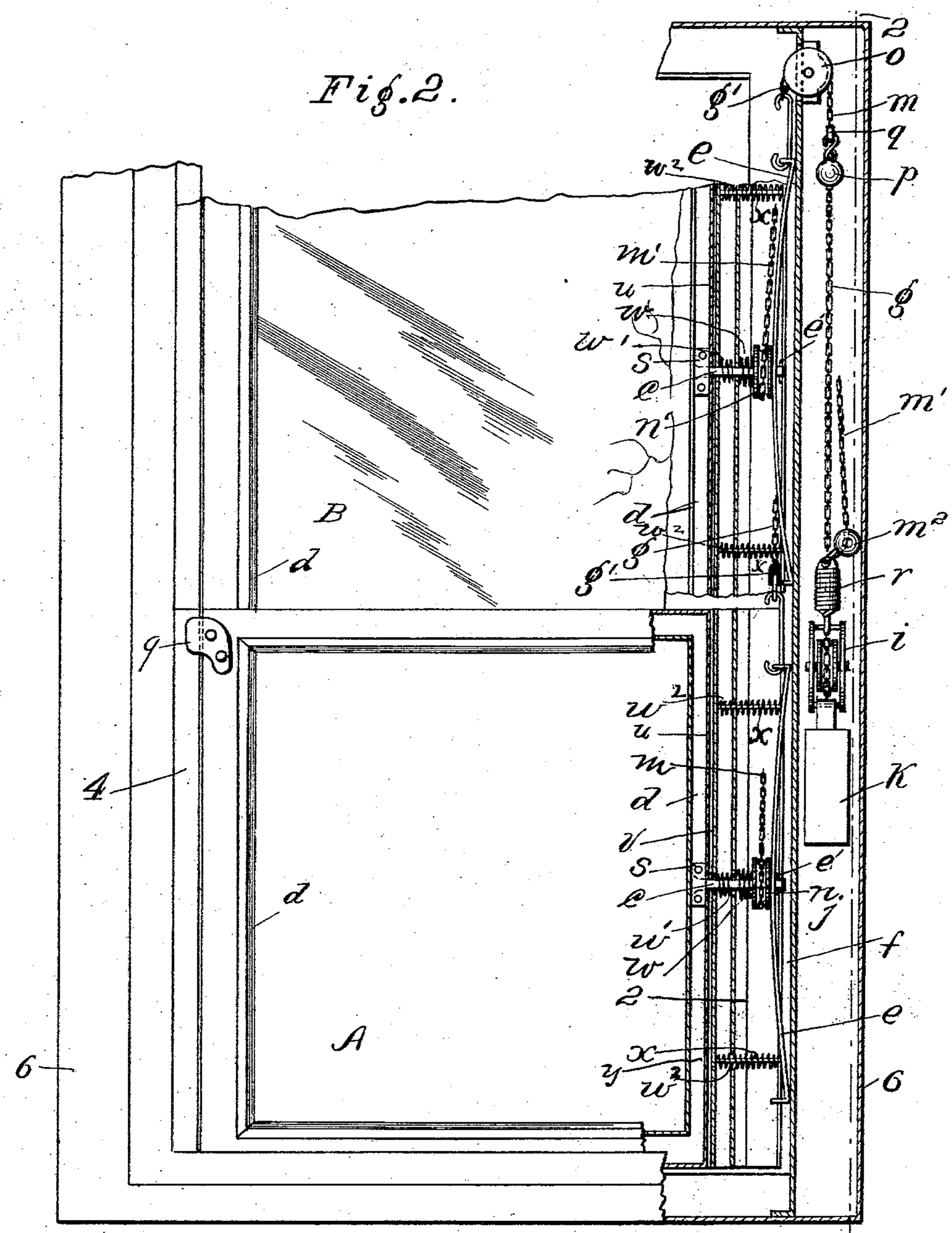

Witnesses
J. M. Howard
C. Sedgwick

Lars Christenson Inventor
By his Attorney A. P. Thayer.

THE NORRIS PETERS CO., PHOTO-LITHO., WASHINGTON, D. C.

No. 743,828. PATENTED NOV. 10, 1903.

L. CHRISTENSON.

REVOLVING METALLIC WINDOW.

APPLICATION FILED MAR. 18, 1903.

NO MODEL. 3 SHEETS—SHEET 3.

Fig. 4.

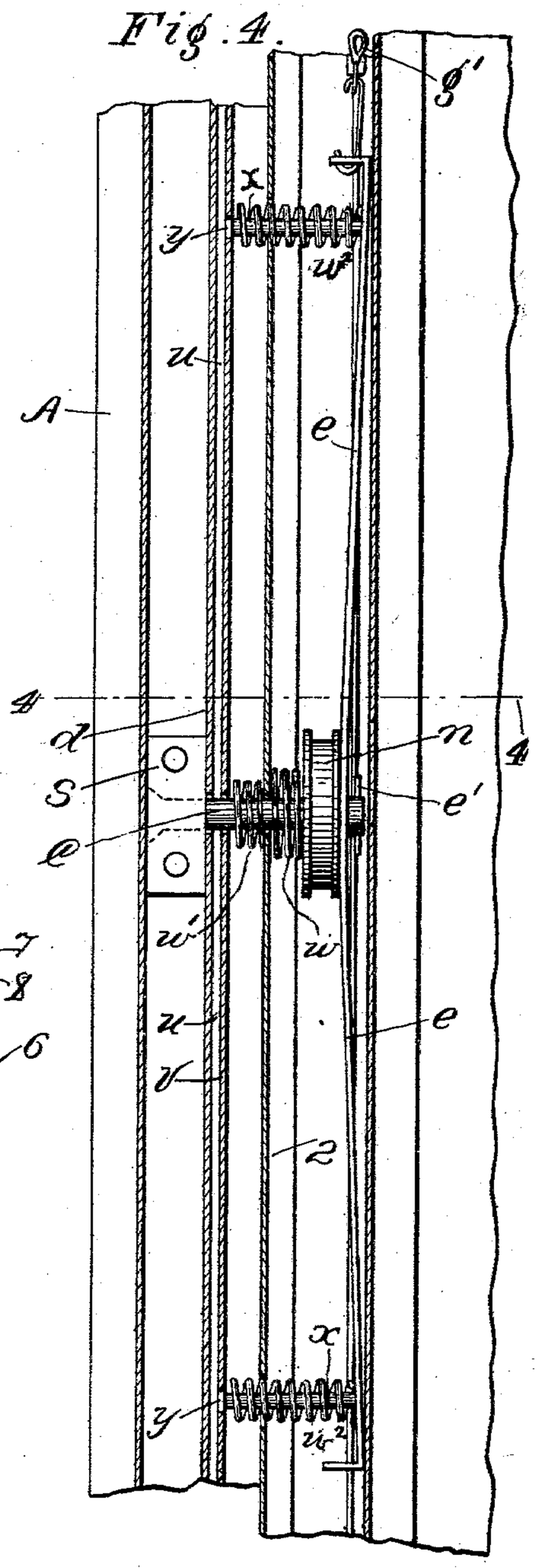

Fig. 3.

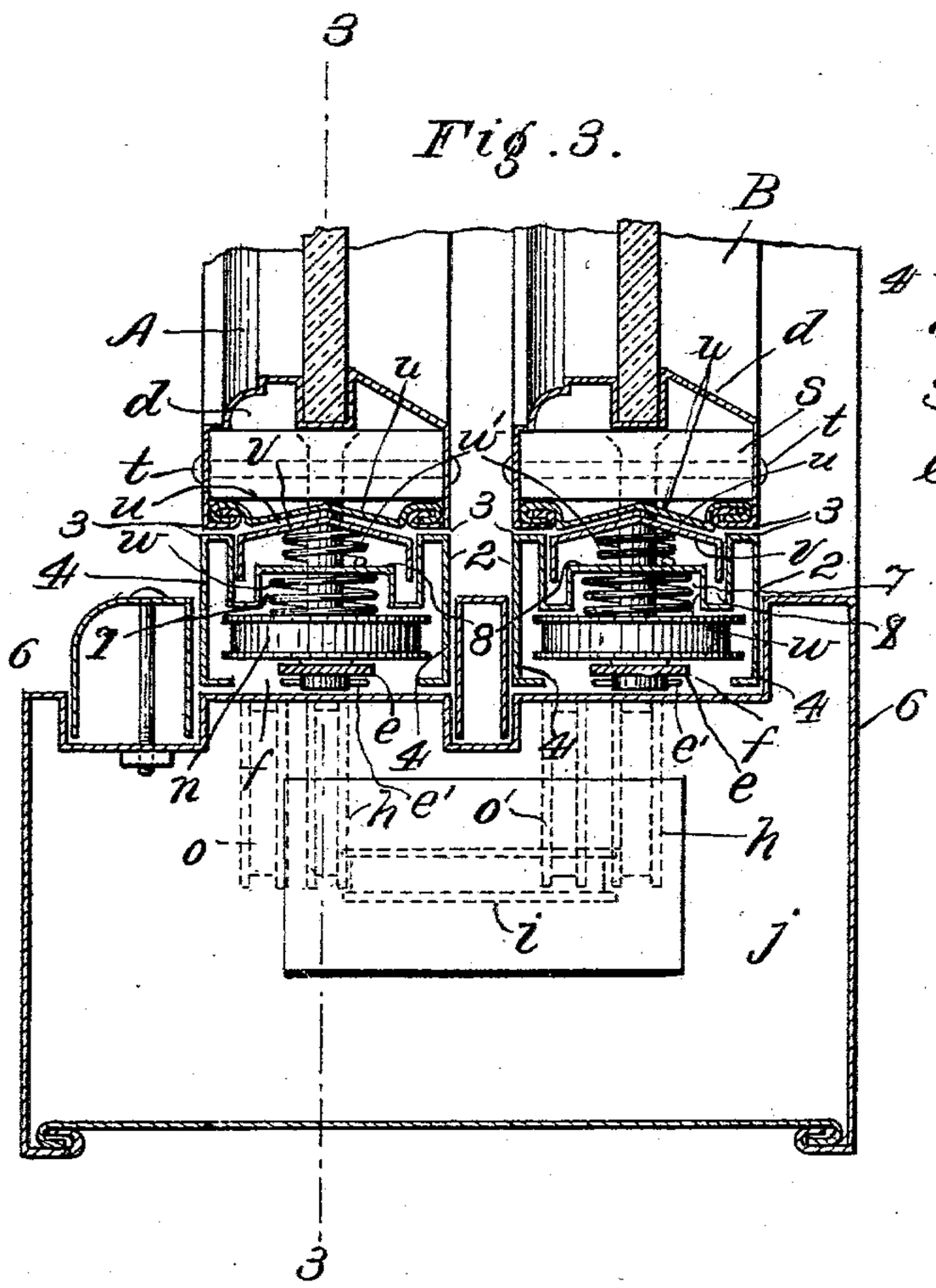

Witnesses
J. M. Howard.
C. Sedgwick

Lars Christenson Inventor
By his Attorney
A. A. Thayer.

THE NORRIS PETERS CO., PHOTO-LITHO., WASHINGTON, D. C.

No. 743,828. Patented November 10, 1903.

UNITED STATES PATENT OFFICE.

LARS CHRISTENSON, OF NEW YORK, N. Y.

REVOLVING METALLIC WINDOW.

SPECIFICATION forming part of Letters Patent No. 743,828, dated November 10, 1903.

Application filed March 18, 1903. Serial No. 148,329. (No model.)

To all whom it may concern:

Be it known that I, LARS CHRISTENSON, a citizen of the United States of America, and a resident of the borough of Bronx, New York city, and State of New York, have invented certain new and useful Improvements in Revolving Metallic Windows, of which the following is a specification.

My invention relates to revolving sheet-metal windows; and it consists of novel means of balancing the sashes one by the other, so that they will when opened on their pivots automatically slide up and down reversely when power is applied to one or the other, and when in case of fire and the sashes are set open on their rotary range of movement a fusing-link in the balancing-chain sets in motion automatically rotating closing action of the sashes, as hereinafter described, reference being made to the accompanying drawings, in which—

Figure 1 is a sectional elevation of my improved revolving window, taken on line 2 2, Fig. 2. Fig. 2 is a vertical section on line 3 3 of Fig. 3. Fig. 3 is a horizontal section on line 4 4 of Fig. 4. Fig. 4 is a detail in vertical section on line 3 3, Fig. 3, enlarged.

The sashes A and B each carry a pivot-stud *c*, rigidly attached to the outer edges of the stiles *d*, midway of their length, said pivots being mounted at their outer ends in the sash-carrying spring-plates *e* and extending through the sliding wind-stops *v* and 2. The plates *e* are confined on the ends of the pivots by pins *e'*. Said plates are respectively suspended in the slideways *f* of the window-frame by a chain *g*, the ends of which are respectively connected to the plates *e* of both sashes at one side of the window. The chain *g* passes over pulleys *h* at the top of the window-frame, thence under the pulley in block *i*, suspended in the bight of the chain in the open space *j* of the window-frame, and carries a weight *k*, balancing both sashes and allowing them to slide up and down, respectively, when open on their pivots. The chains *g* each have one or more fusible links, as *g'*, which will part readily under heat, such as they may be exposed to in case of fire in close proximity, the effect of which on the lower sash will be to allow it to fall when raised, whereupon chains *m*—one to each side of said sash and attached to pulleys *n* on the pivots *c*, respectively, of said sash and suspended over pulleys *o* at the top of the window with a small weight *p* to take up the slack of the chain when the sash is raised and a stop *q* to limit the run of the chain when the sash falls—will automatically turn the sash upright and close it on its pivot when it reaches its normal position. Pulleys *n* are located on said pivots next to the spring-slides *e*.

In the case of the upper sash its corresponding chains *m'*, attached to its pulleys *n'* and passing over pulleys *o'* at the top, are connected to the pulley-blocks *i*, so that the falling of the weights *k* will turn said sash on pivots *c* into the upright normal closed position.

The chains *m'* are connected to the pulley-blocks with an intermediate coiled spring *r* to each to relieve the shocks of the transference of the weights onto them. Weights m^2 on the chains *m'* take up the slack of said chains when said sash may be shifted upward while open, said weights being adapted to slide along the chains when there is a drop of slack.

The pivots *c* are fixedly secured in blocks *s*, suitably placed within the hollow sheet-metal sash-stiles *d* and riveted thereto, as at *t*.

The sash-stiles *d* are slightly grooved in the edges *u* to be confined in position by the reversely-shaped packing-stops *v*, which are pressed into the grooves of the sashes for packing to stop the wind by coiled springs *w* *w'*, carried on each sash-pivot *c*, and two other springs w^2, applied to each stile by stud-pins *x*, attached to the spring-slide *e*, which press the stops *v* and 2 against the sash-stiles. The stops *v* are perforated at *y* for allowing them to be forced back by the sash-stiles out of the grooves of the stiles when the sashes are turned on their pivots. In addition to these stops *v* I have provided other stops 2 to pack against the plain margins 3 of the stiles. Said stops are best shown in the horizontal section of Fig. 3. The sides 4 of these stops reach back into the slideways *f* of the side members 6 of the window-frame, and said stops have an intermediate groove 8 for the sides of the stops *v*, and in the bottom of groove 8 is a reverse groove 7, providing space for said coiled spring *w*, located on the pivot-stud *c*, between the bottom of said groove 7 and the sash-turning pulley, by which said

stop 2 is pressed wind-tight against the margins 3 of the sash-stile, and through spring *w'* stop *v* is also pressed into the groove of the sash-stile, as before stated.

When the sashes are open, they are so held by the friction caused by the pressure of springs *w w'*. Stops 9 on the upper corners of the lower sash prevent by contact with stops 2 overrun of said sash when closing.

My improved apparatus in intended alike for hollow or wood-filled sash-frames.

What I claim as my invention is—

1. The combination of the upper and lower pivoted sashes, spring-plates carrying the sash-pivots, chains and pulleys suspending and balancing said pivot-plates and sashes, and the weights suspended in the chains intermediately of the sashes.

2. The combination of the upper and lower pivoted sashes, spring-plates carrying the sash-pivots, chains and pulleys suspending and balancing said spring-plates and sashes, said chains having a fusible link, weights suspended in the chains intermediately of the sashes, and the stop-chains and pivot-turning pulleys of the lower sash for closing said sash when the sash-balancing chains part.

3. The combination of the upper and lower pivoted sashes, spring-plates carrying the sash-pivots, chains and pulleys suspending and balancing said plates and sashes, said chains having a fusible link, weights suspended intermediately of the sashes, and the chains connecting the upper sash-pivots and the weights for closing said upper sash when the sash-balancing chains part.

4. The combination with the frame, a sash, and the intermediate wind-stop, of the wind-stop for the margins of the sash-stiles, said stop having the sides entering the frame-groove, and also having the reverse groove for the intermediate stop and the packing-springs respectively.

Signed at New York this 6th day of March, 1903.

LARS CHRISTENSON.

Witnesses:
C. SEDGWICK,
J. M. HOWARD.