No. 734,288. PATENTED JULY 21, 1903.

C. A. N. WALLICH.

CALCULATING APPARATUS.

APPLICATION FILED OCT. 18, 1902.

NO MODEL.

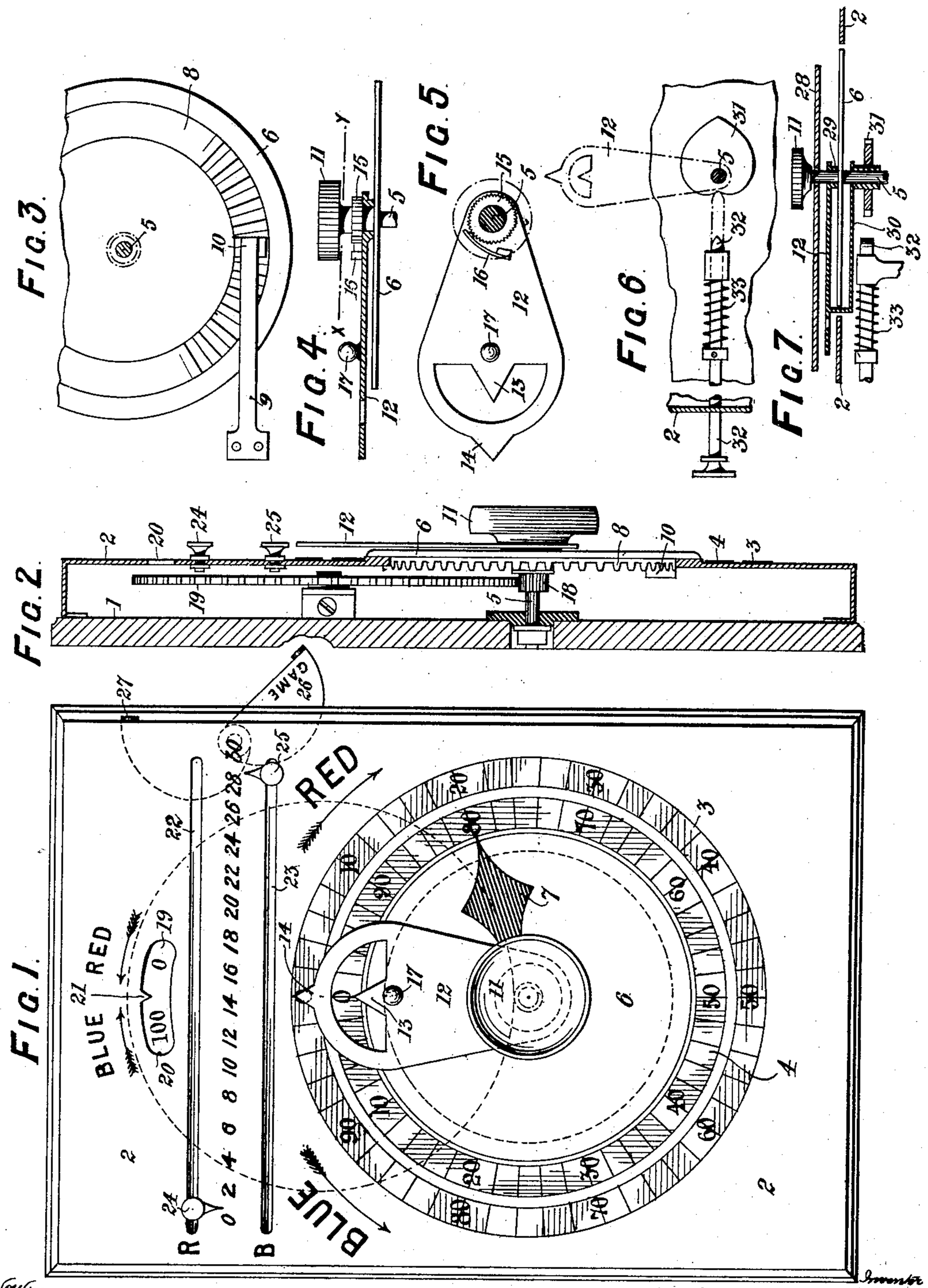

Witnesses
Chas. H. Smith
J. Stair

Inventor
Charles A. N. Wallich
per L. W. Serrell & Son
Attys

THE NORRIS PETERS CO., PHOTO-LITHO., WASHINGTON, D. C.

No. 734,288. Patented July 21, 1903.

UNITED STATES PATENT OFFICE.

CHARLES A. N. WALLICH, OF BEXHILL, ENGLAND.

CALCULATING APPARATUS.

SPECIFICATION forming part of Letters Patent No. 734,288, dated July 21, 1903.

Application filed October 18, 1902. Serial No. 127,770. (No model.)

To all whom it may concern.

Be it known that I, CHARLES A. N. WALLICH, a subject of the King of Great Britain, and a resident of Bexhill-on-Sea, in the county of Sussex, England, have invented certain new and useful Improved Calculating Apparatus, of which the following is a specification.

This invention refers to calculating apparatus for the addition of numbers and for ascertaining the difference between two numbers or for recording the difference between the totals of each of two series or columns of numbers, and as an instance of a useful application of the invention I will describe the device as adapted for scoring in the game of "bridge," wherein two parties score and where it is desired at the end or at any other period of the game to ascertain the exact number of points made, consisting of the difference between the total number scored by one player and the total number scored by the other player and to provide an indication as to which player's credit the balance is due. Obviously the instrument might well be used for other purposes, but the above use presents a good example.

I will describe my invention with reference to the accompanying drawings, whereon—

Figure 1 is a plan view, and Fig. 2 is a vertical central section, showing my improved calculating apparatus. Fig. 3 is an inverted plan view of a detached part hereinafter referred to. Fig. 4 is a sectional side elevation, and Fig. 5 is a sectional plan on the line X Y of Fig. 4, showing the means for maintaining the position of one of the hands during a part of its motion. Fig. 6 is a sectional plan view, and Fig. 7 is a sectional elevation, of a device hereinafter described for moving one of the hands to the zero position.

Referring to Figs. 1, 2, and 3, the apparatus is composed of a base-plate 1, mounted upon which is a casing 2, the upper face of this casing being clearly shown at Fig. 1. Upon the upper face of the casing 2 there is delineated by engraving, printing, or the like two concentric circular dials 3 4. These dials are divided into the required number of divisions by lines radiating from the center, and in the example shown each dial is so divided by the radiating lines into fifty divisions and the dials (when employed for the use hereinbefore stated—namely, for scoring in a game, such as bridge) are distinguished from each other by difference in color. In the drawings it has been assumed that the two players in the game are distinguished from one another by the colors red and blue, and therefore the outer dial 3 is supposed to be colored red, while the inner dial 4 is supposed to be colored blue, and these dials, since in the game of bridge the scoring is by even numbers, "2," "4," &c., are figured accordingly in even numbers from zero, the red dial 3 being numbered clockwise and the blue dial 4 being numbered from zero counter-clockwise.

Mounted centrally within the dials and carried by a bearing in the base-plate 1 I provide a vertical spindle 5, (see Fig. 2,) and this spindle has fixed to it a disk 6, which lies upon or level with the top of the casing 2. The disk 6 has an index-finger 7, produced by engraving, printing, or the like upon its upper surface, the point of the finger extending to the edge of the disk, and beneath the disk I provide means to prevent accidental revolution—such, for instance, (see Fig. 3,) as a wheel 8, formed with serrations or teeth fixed to or formed with the under face of the disk 6—and I provide a spring 9, fixed to the casing and carrying a click or detent 10, which engages the said wheel 8. The disk 6 can be turned to any required extent by a milled head 11, fixed on the end of the spindle 5, and during such rotation the click 10 jumps over the teeth of the wheel 8 and retains the disk securely in the position to which it has been brought.

Mounted upon the spindle 5, beneath the milled head 11 and above the disk 6, I provide an index-hand 12, formed with two pointers 13 14, the point 13 colored blue to indicate upon the "blue" dial 4 and the other point 14 colored red to indicate upon the "red" dial 3. The index-hand 12 is required at times to rotate with the disk when the milled head 11 is turned, and then while the milled head and disk 6 are held stationary the index-hand must be capable of being moved relatively thereto, and to this end at Fig. 2 the index-hand 12 is movable with a certain amount of friction upon the spindle 5. In cases, however, where the frictional

grip of the index-hand is not considered sufficient, I then, as shown at Figs. 4 and 5, fix a click-wheel 15 on the spindle 5, and I mount upon the index-hand 12 a spring-detent 16, which coacts with the click-wheel 15, (see Fig. 5,) and thus normally the hand 12 will move with the disk 6 and the spindle 5, but if the disk 6 is held stationary by either its own friction or by hand then the index-hand 12 can be seized by a knob 17 and turned relatively to the disk 6.

Mounted on the spindle 5, below the disk 6 and in the interior of the case, is a toothed pinion 18, which gears with a toothed "hundreds-disk" 19. This disk 19 is mounted upon a pivot carried from the bed-plate 1, and one half of its upper face is colored red and the other half blue, or equivalent means are provided to distinguish one half of the disk from the other. Near the periphery and at one end of the diametrical line which divides the colors of the disk "0" is marked to indicate zero, and then at equal distances from zero "100," "200," "300," &c., are marked upon both sides of the diametrical line. Above the disk 19 there is an aperture 20 in the top of the casing 2, through which some of the numbers on the disk 19 can be observed, and at the center of that aperture there is a point 21, beneath which when the use of the apparatus is commenced the zero of the disk 19 is placed and the red will be seen upon one side of the pointer 21 through the aperture and the blue will be seen upon the left-hand side of the point 21. The index-finger 7 should then point to zero on the two dials 3 and 4.

22 23 are slots in the top of the casing 2, along which can be slid sliding pointers 24 25, indicating on a scale of numbers delineated on the top of the casing 2, and these are used to indicate the number of points made by tricks alone toward "game" gained by each player. There are pivoted wings 26 27 normally within the casing and capable of moving out therefrom through slots, and these wings are so arranged that when a pointer, such as the one 25 has been moved up to the end of the slot 23, reaches the number "30" on the scale, (the number which indicates the end of a game,) it forces out that particular wing 26 and shows the word "Game" written thereon. One pointer 24 is colored blue and the other pointer 25 red, because one pointer is employed by one player and the other pointer by the other player.

At Figs. 6 and 7 I have shown means by which the index-hand 12 can be returned to zero by mechanical means, and such a device is necessary when it is considered desirable, as it sometimes is, to cover the top of the casing 2 with a sheet of glass. At Fig. 7, 28 is a glass covering for the top of the casing 2, and of course the spindle 5 projects through a hole in the glass and carries, as before, the milled head 11. The index-hand 12 moves with the spindle by friction or otherwise, as previously explained; but obviously when it is necessary, after having moved the index-hand in one direction along with the disk 6 to then return the index-hand 12 to position at zero without moving the disk 6, some mechanical means must be provided for effecting this operation. Therefore upon a sleeve 29 upon a spindle 5, which sleeve is connected by an arm 30 to the finger 12, I fix a heart-shaped cam 31 or such a cam that the radii of each half increases in length toward one point, which is the apex of the heart. Mounted within the casing and extending through one side thereof I provide a plunger 32, held away from the cam 31 by a spring 33 and carried in guides, so as to be capable of being slid by operation from the outside of the case toward the axis of the spindle 5. When the index-hand 12 has been moved along with the disk 6 by the milled head 11, and it is then required to return the index-hand 12 to zero—that is, to return it to the dotted position shown at Fig. 6—I press the plunger 32 and the point acts upon one side or other of the apex of the heart, and by reason of the decreasing diameter of the heart-cam 31 it is moved around until the heart arrives at the position shown at Fig. 6, when the plunger 32 is released and the index-hand 12 is left at zero.

The operation of the apparatus I will now describe, referring to the simple construction shown at Figs. 1 and 2: Supposing that blue plays first and makes eighty points and that the index-finger 7 of the disk 6, together with the points 13 and 14 of the index-hand 12, is at the zero of the two dials 3 and 4 and the hundreds-disk 19 also indicates zero, then both the index-hand 12 and the disk 6 are to be moved around in the direction of the blue arrow counter-clockwise until the pointer 13 has passed through forty divisions on the dial 4, and then the index-hand 12 by its knob 17 is brought back to zero, while the disk 6 remains stationary. Consequently the index-finger of the disk 6 remains indicating "80" on the blue dial to the credit of the blue. During this operation the hundreds-disk 19 has partly rotated clockwise and has brought the number "100" on the blue half of the disk 19 into view and nearly beneath the central pointer 21 in the space 20, while the zero, and consequently that red portion of the disk 19 which could be seen through the aperture, is receding away therefrom toward the right, and it is obvious, therefore, that the advantage is on the side of the blue. It is in this position that the apparatus is shown on the drawings at Fig. 1. At this position the index-finger also points to "20" on the red dial, but the pointer 21 in the space 20, covering a blue portion of the disk 19, decides that the blue figures opposite the index-finger on the dial are to be taken and not the red. I will suppose now that red plays and makes eighteen points. (The index-finger is now at zero.) To register this

the milled head 11 is turned clockwise, carrying with it the disk 6 and the index-hand 12 until the point 14 and the index-hand 12 have traveled over nine divisions on the dial 3, representing eighteen points. The index-hand 12 is then turned to zero while the disk 6 is stationary, leaving the index-finger on the disk opposite to the division-line on the blue dial 4 representing sixty-two to the credit of the blue, and it will be observed that it is to the credit of the blue by the position of the exposed part of the hundreds-dial 19, blue being indicated by the pointer 21 on the hundreds-dial. It will thus be seen that the apparatus recorded in the first operation the difference between the scores of the players—that is, eighty being the difference between the score of eighty made by the blue and zero by the red—while in the second operation the apparatus registered the difference between the total score made by the blue and the score by the red—that is, sixty-two. So far in the exemplification of the actual use of the invention the operation of subtraction has been effected, but supposing now that blue scores a further one hundred and twenty points the disk 6, together with the index-hand 12, is moved around counter-clockwise through one complete revolution for the one hundred and a further ten divisions up to that marked "20" for the additional twenty, making in all one hundred and twenty points on the dial 4. The index-finger 12 is then returned to zero, as usual, after each operation. The index-finger 7 will now be found to point to the radial division representing "82" on the blue scale, while at the same time it will be found that the hundreds-disk has advanced into such a position that the pointer 21 indicates between "100" and "200," and the result to the credit of the blue will thus be read by the dial 19 and by reference to the index-finger 7 as one hundred and eighty-two.

What I claim as my invention, and desire to secure by Letters Patent, is—

1. In a calculating apparatus for recording addition of numbers and the difference between two numbers, or the difference between the two totals of two series of numbers; the combination with a casing, a spindle passing through the casing and carried in bearings therein, and means for rotating the spindle, a disk fixed on the spindle upon the upper face of the casing, an indicating-finger delineated on the upper surface of the disk, an index-hand mounted concentrically with and above the disk, means for causing the index-hand to follow the motions of the disk, and means for returning the index-hand to its zero position while the disk is held stationary; of two dials delineated on the face of the casing external and concentric with the disk, a zero-mark on both of the dials on the same radial line, divisions on the inner dial numbered in a direction counter-clockwise, and divisions on the outer dial numbered clockwise from the zero-mark, and two pointers on the index-hand to indicate respectively on the inner and outer dials, substantially as set forth.

2. In a calculating apparatus for recording addition of numbers and the difference between two numbers, or the difference between the two totals of two series of numbers; the combination of a casing, a spindle carried in bearings and projecting through the casing, a disk on the spindle upon the upper face of the casing, and an index-finger delineated on the disk, an index-hand concentric with and above the disk, two concentric dials on the face of the casing external of the disk, a zero-mark in the same radial line on both dials, divisions on the inner and outer dials numbered in reverse directions from zero, and two pointers in the same radial line on the index-hand to indicate on the dials, means for rotating the spindle and disk, to bring its indicating-finger from zero to opposite a desired number on one of the dials, means for causing the index-hand to follow the said motion of the disk from zero until it also indicates the same number on the same dial, means for returning the index-hand to zero independently of the disk whereby the disk-finger remains at its original position and indicates the difference in number on the dial from the point at which it started, substantially as set forth.

3. In a calculating apparatus for recording addition of numbers and the difference between two numbers, or the difference between the two totals of two series of numbers; the combination with a casing, a spindle passing through the casing and carried in bearings therein, and means for rotating the spindle, a disk fixed on the spindle upon the upper face of the casing, an indicating-finger delineated on the upper surface of the disk, an index-hand mounted concentrically with and above the disk, means for causing the index-hand to follow the motions of the disk, and means for returning the index-hand to its zero position while the disk is held stationary, two dials delineated on the face of the casing external and concentric with the disk, a zero-mark on both of the dials on the same radial line, divisions on the inner dial numbered in a direction counter-clockwise, and divisions on the outer dial numbered clockwise from the zero-mark, and two pointers on the index-hand to indicate respectively on the inner and outer dials; of a movable dial beneath the casing, a zero-mark on the movable dial, a series of radial divisions extending clockwise on one side of the zero-mark of the said dial, and a series of radial divisions extending counter-clockwise on the other side of the zero-mark of the said dial, gearing between the disk-spindle and the movable dial, an aperture in the casing through which a portion of the movable dial is exhibited, and an index-point on the edge of the aperture to show to which of the two series of numbers the difference or addition is

to be credited, and to indicate the hundreds when the divisions on the concentric dials do not reach beyond one hundred, substantially as set forth.

4. In a calculating apparatus for recording addition of numbers and the difference between two numbers, or the difference between the two totals of two series of numbers; the combination with a casing, a spindle passing through the casing and carried in bearings therein, and means for rotating the spindle, a disk fixed on the spindle upon the upper face of the casing, means for preventing accidental rotation of the disk, an indicating-finger delineated on the upper surface of the disk, an index-hand mounted concentrically with and above the disk, means for causing the index-hand to follow the motions of the disk, and means for returning the index-hand to its zero position while the disk is held stationary; of two dials delineated on the face of the casing external and concentric with the disk, a zero-mark on both of the dials on the same radial line, divisions on the inner dial numbered in a direction counter-clockwise, and divisions on the outer dial numbered clockwise from the zero-mark, and two pointers on the index-hand to indicate respectively on the inner and outer dials, substantially as set forth.

CHARLES A. N. WALLICH.

Witnesses:

GRIFFITH BREWER,

WALTER J. SKERTEN.